EWELLIX

MAKERS IN MOTION

Precision rolled ball screws catalogue

Contents

Introduction 4
Product description 5
Product overview 6

Selection guide 8
Technical concepts 9
Introduction to Ewellix ball screws 9
Basic dynamic load carrying capacity (C_a) 9
Nominal fatigue life L_{10} 9
Service life 9
Equivalent dynamic load 10
Basic static load carrying capacity (C_{oa}) 10
Critical rotating speed for screw shafts 10
Permissible speed limit 10
Screw shaft buckling 11
Lubrication 11
Efficiency and back-driving 11
Axial play and preload 11
Static axial stiffness of a complete assembly 12
Materials, heat treatment and coatings 12
Operating temperature 13
Ball screw support bearings 13
Designing the screw shaft ends 13
Critical applications 13
Working environment 13
Calculation formulae 14
Calculation example for a ball screw 17
Lead precision 19
Manufacturing precision 19
Ewellix high precision rolled ball screws 19
Lead precision 19

Product range 21
SD/BD/SH miniature screws 22
SDS/BDS/SHS miniature screws in stainless steel 24
SP/BP high-performance miniature screws 26
SX/BX universal screws 28
Dedicated flanges for SX/BX nuts 30
SND/BND precision screws, DIN standard 69051 32
PND preloaded screws, DIN standard 69051 34
SN/BN precision screws 36
PN preloaded screws 38
SL/TL long lead screws 40
SLT/TLT rotating nut 42
Shaft end combinations 44
Standard machine ends 45
FLBU ball screw support bearings 50
PLBU ball screw support bearings 52
BUF ball screw support bearings 54
Examples of customized nuts 56
Manufacturing tolerances 57
Ordering key 58

Mounting instructions and support 60
Assembly procedure 61
Storage 61
Alignment 61
Lubrication 61
Removing the nut / assembling the nut on the shaft 62
Wiper assembly 62
Starting–up the screw 62
Service range 63
Design calculation and inquiry form 64

EWELLIX

The heritage of innovation

Ewellix is a global innovator and manufacturer of linear motion and actuation solutions. Today, our state-of-the-art linear solutions are designed to increase machine performance, maximise uptime, reduce maintenance, improve safety and save energy.

Technology leadership

Our journey began **over 50 years** ago as part of the SKF Group, and our history with SKF provided us with the **expertise to continuously develop new technologies** and use them to create cutting edge products that offer our customers a competitive advantage.

In 2019, we became independent from SKF and changed our name to Ewellix. We are proud of our heritage. This gives us a unique foundation on which to build an agile business with engineering excellence and innovation as our core strengths.

Global presence and local support

With our **global** presence, we are uniquely positioned to deliver **standard components and custom-engineered solutions**, with full technical and applications support around the world. Long standing relationships with our distributor partners allow us to support customers in a variety of different industries. At Ewellix, we don't just provide products; **we engineer integrated solutions** that help customers realise their ambitions.

1 400 employees

16 sales units

9 factories

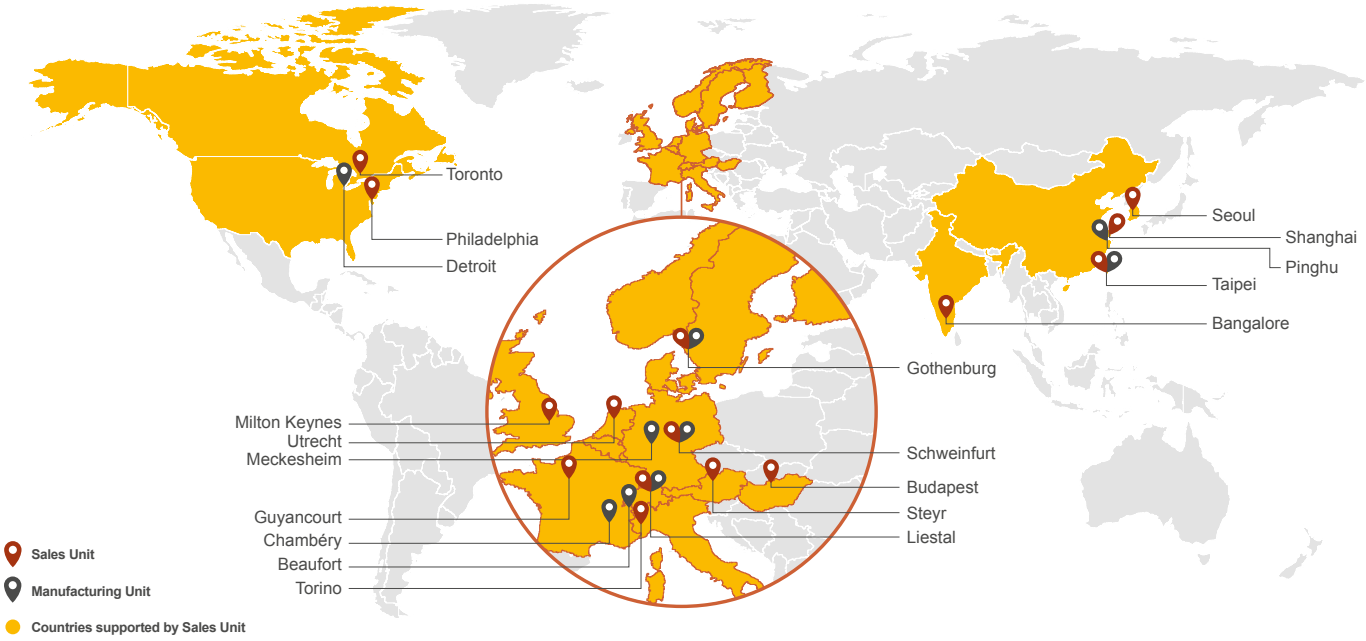

EWELLIX

Trusted engineering expertise

Our industry is in motion; pushing towards solutions that reduce environmental impact and leverage new technology. We provide technical and manufacturing expertise to overcome our customers' challenges.

Engineering for the future

We work in a **wide range of industries**, where our solutions provide key functionality for business critical applications.

For the **medical industry**, we provide precision components for use in core medical equipment.
Our unparalleled understanding of **industrial automation** systems is based on decades of research into advanced automation components and techniques

Our deep knowledge of **mobile machinery** provides powerful and reliable electromechanical solutions for the harshest conditions. In an **industrial distribution** setting, we supply linear expertise to our partners, empowering them to serve customers with greater efficiency

We offer excellence

We have a **unique understanding of linear equipment** and how it's integrated in customers' applications to provide the best performance and machine efficiency.

We assist our customers by creating equipment that runs faster, longer and safer and that is sustainable.
We provide a wide variety of **linear motion components** and **electromechanical actuators** for equipping any automation application, helping our customers **reduce its footprint, energy use and maintenance**.

We push for lower energy consumption that **increases productivity and reduces the environmental impact**.

Actuation systems

Ball and roller screws

Linear guides and systems

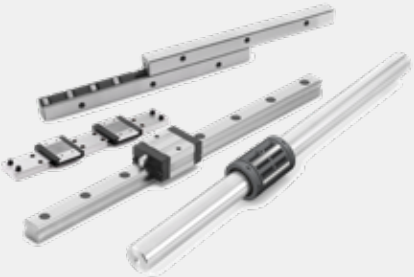

1

Introduction

EWELLIX

Product description

This catalogue describes Ewellix expertise, technology and solutions related to precision rolled ball screws. Thanks to our lengthy experience with manufacturing ball screws and continuous product and process development, Ewellix provides customers with precision rolled ball screw solutions that fulfil their most demanding applications in terms of efficiency, precision, durability and value.

In many cases, these ball screws can replace ground ball screws, offering a similar level of performance and precision at a lower cost.

The high quality of Ewellix rolled ball screws is achieved through our dedicated manufacturing processes, including precision rolling and specific heat-treatment.

Product overview

Screw assembly

SD/BD – SDS/BDS

SH – SHS

SP/BP

SX/BX

SND/BND/PND, DIN 69051

Type of recirculation

Internal, by inserts
Stainless steel optional [1)]

External, by integrated tube
Stainless steel optional [2)]

Internal, by inserts

Internal, by inserts

Internal, by inserts

[1)] except 10×4 R and 16×10 R
[2)] 6×2 R only.

Designation	d_0 mm	P_h mm	Page
SD/BD/SDS/BDS		2,5	22, 24
SD/BD/SDS/BDS	10	2	22, 24
SD/BD	10	4	22
SD/BD/SDS/BDS	12	2–4–5	22, 24
SD/BD/SDS/BDS	14	4	22, 24
SD/BD/SDS/BDS	16	2–5	22, 24
SD/BD	16	10	22
SH/SHS	6	2	22, 24
SH	10	3	22
SH	12,7	12,7	22
SP/BP	8	2,5	26
SP/BP	10	4–5	26
SP/BP	12	2–4–5	26
SP/BP	16	5	26
SX/BX			28
SX/BX	20	5	28
SX/BX	25	5–10	28
SX/BX	32	5–10	28
SX/BX	40	5–10–40	28
SX/BX	50	10	28
SX/BX	63	10	28
SND/BND/PND	16	5–10	32, 34
SND/BND/PND	20	5	32, 34
SND/BND/PND	25	5–10	32, 34
SND/BND/PND	32	5–10	32, 34
SND/BND/PND	40	5–10	32, 34
SND/BND/PND	50	10	32, 34
SND/BND/PND	63	10	32, 34

EWELLIX

Screw assembly

Type of recirculation

Designation	d_0 mm	P_h mm	Page
SN/BN/PN	16	5	36, 38
SN/BN/PN	20	5	36, 38
SN/BN/PN	25	5–10	36, 38
SN/BN/PN	32	5–10	36, 38
SN/BN/PN	40	5–10	36, 38
SN/BN/PN	50	10	36, 38
SN/BN/PN	63	10	36, 38

SN/BN/PN

Internal, by inserts

SL/TL	25	20–25	40
SL/TL	32	20–32–40	40
SLD/TLD	32	32	40
SL/TL	40	20–40	40
SL/TL	50	50	40

SL/TL – SLD/TLD

By faces

SLT/TLT	25	20–25	42
SLT/TLT	32	20–32–40	42
SLT/TLT	40	20–40	42
SLT/TLT	50	50	42

SLT/TLT rotating nuts

By faces

FLBU/PLBU/BUF	16	50, 54
FLBU/PLBU/BUF	20	50, 54
FLBU/PLBU/BUF	25	50, 54
FLBU/PLBU/BUF	32	50, 54
FLBU/PLBU/BUF	40	50, 54
FLBU/PLBU/BUF	50	50, 54
FLBU/PLBU/BUF	63	50, 54

Ball screw support bearings FLBU, PLBU, BUF

Complete ball screw assembly with support bearing

2

Selection guide

Technical concepts

Introduction to Ewellix ball screws

Ball screws convert rotary motion into linear motion, and vice-versa, and loads are transferred from the screw shaft to the nut through a ball set: in this sense, ball screws relate to general bearing technology. Various types of bearing steel are used to attain the hardness and material fatigue properties required for carrying heavy application loads over extended periods of service. Some bearing concepts such as load ratings, load cycles, nominal and service life, stiffness, speed ratings, lubrication requirements, etc. are explained below to guide customers through the ball screw selection process.

Only basic selection parameters are included in this chapter. To make the very best selection of a ball screw, the designer should consider critical parameters such as the load cycle, the linear or rotational speed, the rates of acceleration and deceleration, the cycle rate, the environment, the required life, the lead accuracy, the stiffness, and any other special requirements. If in doubt, please consult the Ewellix ball screw assembly specialists who will assist you in the selection process.

Basic dynamic load carrying capacity (C_a)

The dynamic load rating capacity is used to compute the nominal fatigue life of ball screws. It results from the axial load, constant in magnitude and direction, which acts along the central axis of the ball screw, resulting in the calculated nominal life as defined by ISO of one million revolutions.

With a given combination of nominal diameter and lead, a ball screw's dynamic and static load carrying capacities are determined by the number of ball turns supporting the load.

For each product family, the type and number of circuits generate a specific number of ball turns. For example, the SH type nut with external tube recirculation typically presents 2,5 turns of balls within a circuit. The standard SD type nut has 3 circuits covering 0,9 turns each.

Nominal fatigue life L_{10}

Nominal fatigue life is, according to the ISO definition, the life achieved or exceeded by 90% of a large-enough group of apparently identical ball screws, working under identical conditions (alignment, axially and centrally applied load, speed, acceleration, lubrication, temperature and cleanliness).

The nominal life of a ball screw is the statistical number of revolutions which the ball screw is capable of reaching before the first signs of material fatigue by flaking occur on one of the rolling surfaces.

Service life

The actual life achieved by a specific ball screw before it fails is known as "service life." Failure is due not only to material fatigue by flaking, but also to inadequate lubrication, wear of the recirculation system, corrosion, contamination and, more generally, loss of the functional characteristics required by the application.

Experience acquired with similar applications will help in selecting the right screw to obtain the necessary service life. Structural requirements such as the strength of screw ends and nut attachments should be considered.

To attain L_{10} life performance, a mean working load of up to 60% of C_a (to limit the Hertz pressure at the balls / raceways contacts) and a stroke higher than 4 leads (to avoid false-brinelling which could occur with very short strokes or oscillation movements) are required.

Equivalent dynamic load

The loads acting on the screw can be calculated according to the laws of mechanics if the external forces (e.g. power transmission, work, rotary and linear inertia forces) are known or can be calculated. It is necessary to calculate the equivalent dynamic load.

Radial and moment loads must be taken up by linear bearing systems. It is extremely important to resolve these problems at the earliest possible design stage. These forces are detrimental to the life and the expected performance of the screw (↳ **fig. 1**).

When the load fluctuates during the working cycle, it is necessary to calculate the equivalent dynamic load: this load is defined as the hypothetical load, constant in magnitude and direction, acting axially and centrally on the screw, which if applied, would have the same influence on the screw life as the actual loads which the screw is subjected to.

If misalignment, uneven loading, shocks, etc. cannot be avoided in the application, they must be taken in account during the sizing of the ball screw.

Their influence on the screw's nominal life can generally be estimated[1)].

Basic static load carrying capacity (C_{oa})

Ball screws should be selected considering the basic static load capacity C_{oa}, rather than the basic dynamic load capacity, when they are subjected to continuous or intermittent shock loads while stationary or rotating at very low speed for short periods of time. The permissible load is determined by the permanent deformation caused by the load acting at the contact points.

The static load carrying capacity is, according to ISO standards, the purely axially and centrally applied static load which creates, by calculation, a total (rolling element + threaded surface) permanent deformation equal to 0,0001 times the diameter of the rolling element (↳ **fig. 2**).

A ball screw basic static load rating must be, at a minimum, equal to the product of the maximum axial static load applied and a safety factor "s_0." Past experience with similar applications and requirements of running smoothness and noise level will guide the selection of "s_0"[1)].

[1)] Ewellix can help you make these calculations with consideration to the actual conditions of service.

Critical rotating speed for screw shafts

For this calculation, the shaft is equated to a cylinder, with an external diameter equal to the root diameter of the thread. The formulae use a parameter whose value is dictated by the mounting of the screw shaft, whether it is simply supported or fixed.

As a general rule, the nut is not considered to be a support of the screw shaft. Because of the potential inaccuracies in the mounting of the screw assembly, a safety factor of 0,8 is applied to the calculated critical speed.

Calculations which consider the nut to be a support for the shaft, or which reduce the safety factor, require practical tests and possibly optimization of the design.

Permissible speed limit

The permissible speed limit is the speed which a screw cannot reliably exceed at any time. It is generally the limiting speed of the recirculation system in the nut. It is expressed as the product of maximum rotational speed (in rpm) and the nominal diameter of the screw shaft (expressed in mm).

The speed limits quoted in this catalogue are the maximum speeds that may be applied for very short periods of time and with optimized running conditions of alignment, light external load and preload with monitored lubrication.

Running a screw continuously at the permissible speed limit may lead to a reduction of the calculated life of the nut mechanism.

Fig. 1

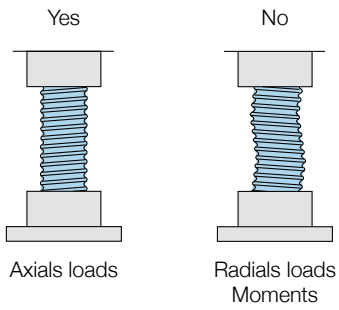

Fig. 2

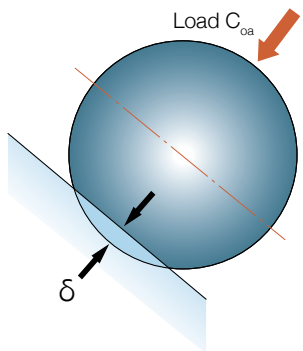

Important!

High speed associated with high load requires a large input power and yields a relatively short nominal life[1].

In the case of high acceleration and deceleration, we recommend either working under a nominal external load or applying a light preload to the nut to avoid internal sliding during reversal of movement.

The preload for screws subjected to high velocity must be calculated to ensure that the rolling elements do not slide[1].

Excessive preload will create an unacceptable increase in the internal temperature.

Screw shaft buckling

The column loading of the screw shaft must be checked when it is subjected to dynamic or static compression loading.

The maximum permissible compressive load is calculated using the Euler formulae, with a safety factor of 3 to 5, depending on the application.

The type of shaft end mounting is critical to select the proper coefficients to be used in the Euler formulae.

When the screw shaft has a single diameter along its total length, the root diameter of the threaded shaft is used for the calculation. When the screw comprises different sections with varying diameters, calculation becomes more complex[1].

Lubrication

Proper quantities and quality of lubrication must be selected if ball screws are to operate correctly and to maximize their service life.

Greater care is required for operation at high speed, as the lubricant spread on the surface of the screw shaft may be thrown off by centrifugal forces. It is important to monitor this phenomenon during the first run at high speed and, if necessary, to adapt the frequency of re-lubrication or the flow of lubricant, or to select a lubricant with a different viscosity.

Monitoring the steady temperature reached by the nut allows for the optimization of the frequency of re-lubrication or the oil flow rate.

Efficiency and back-driving

Screw performance primarily depends on the geometry of the contact surfaces and their finish and the helix angle of the thread. It also depends on the working conditions (load, speed, lubrication, preload, alignment, etc.).

“Direct efficiency” is used to define the input torque required to transform the rotation of one component into the translation of the other. Conversely, “indirect efficiency” is used to define the axial load required to transform the translation of one component into the rotation of the other one. It is also used to define the braking torque required to prevent that rotation.

It is safe to assume that ball screws are reversible or back-driveable under almost all circumstances. A braking mechanism (gear reducers or brake) must be part of the design, if back-driving is to be avoided.

Preload torque

Screws with internal preload exhibit a certain amount of friction torque. This torque still exists when ball screws are not externally loaded. Preload torque is measured with ISO grade 64 oil.

Starting torque

This is the amount of torque required to overcome the following forces to start rotation:

a the total inertia of all moving parts accelerated by the source of power (including rotational and linear movements);

b the internal friction of the screw / nut assembly, bearings and associated guiding devices.

In general, the torque required to overcome the inertia (**a**) is greater than the friction torque (**b**). The friction coefficient of the high efficiency screw when starting moving (μs) is estimated to reach up to double the amount of the dynamic coefficient μ, under normal conditions of usage.

Axial play and preload

Ewellix products are available with a range of versions of axial play.

Standard axial play is intended for transport screws, when the product is not subject to vibrations, high accelerations, and when positioning accuracy under load is not critical (e.g.: SN type).

Reduced play (e.g.: SN type with reduced play) and backlash elimination by oversized balls (e.g.: BN type) are recommended to increase assembly precision (↳ **fig. 3**).

For optimum stiffness and positioning accuracy under load, internally preloaded nuts are recommended (e.g.: PN type) (↳ **fig. 4**). When subjected to external loading, preloaded nuts exhibit a much lower elastic deformation than non-preloaded nuts.

Preload is the amount of force applied to a set of two half-nuts necessary to either press them together or to push them apart with the purpose of eliminating backlash or increasing the stiffness of the assembly. The preload is measured by the value of the preload torque (see explanations in the previous paragraph). For a given amount of preload (expressed in Newton), the friction torque varies with different types of nuts and with the preloading method. The friction torque due to preload is indicated in product tables.

Static axial stiffness of a complete assembly

The static axial stiffness of a complete ball screw assembly is the ratio of the external axial load applied to the system and the axial displacement of the face of the nut in relation to the fixed (anchored) end of the screw shaft. Please see calculation formulae (↳ **pages 14** to **15**).

Nut stiffness: R_n

When a preload is applied to a split nut, the internal play is eliminated. Additionally, the Hertzian elastic deformation increases with increased preload and increased stiffness.

The theoretical elastic deformation at the contact points does not take into account machining inaccuracies, actual sharing of the load between the different contact surfaces, or elasticity of the nut and of the screw shaft. For this reason, the practical stiffness values given in the catalogue are lower than the theoretical values. They are determined by Ewellix assuming a preload of 8,5% Ca for screws with diameter up to 40 mm, and a preload of 7% Ca for screws with diameter greater than 40 mm, when applying an external axial load centred on the screw shaft and equal to twice the amount of preload.

Shaft stiffness: R_s

The elastic deformation of the screw shaft is proportional to its length and inversely proportional to the square of the root diameter.

According to the relative importance of the screw deformation, an excessive increase of nut preload and of the supporting bearings yields a limited increase of stiffness and noticeably increases the preload torque and therefore the running temperature.

Consequently, the preload stated in the catalogue for each screw dimension is optimum and should not be exceeded.

Please see calculation formulae (↳ **pages 14** to **15**).

Materials, heat treatment and coatings

Standard screw shafts are manufactured from carbon steel which is surface hardened by induction. For standard screws,

rolling surface hardness is 56 to 60 HRc, depending on diameter (for very small diameter screws, the temperature during the hardening process is slightly lowered to avoid the through-hardening of the screw shaft, therefore resulting in lower surface hardness).

Standard nuts are machined from steel which is through-hardened (100 Cr6–NFA 35.565 or equivalent for diameters ≥ 20 mm, and carbon steel for diameters < 20 mm).

Most stainless steel screws have a surface hardness ranging from 50 to 58 HRc, depending on the type of stainless steel being used and the screw diameter (note the effect of reduced hardening temperature on small diameter screws, as previously mentioned). The load ratings provided in the catalogue are given for standard screws only.

Ewellix offers various types of surface coating for improved ball screw performance:

- Manganese phosphate coating is standard for the SX/BX universal nuts. This coating can also be applied to most ranges of precision rolled ball screws to improve the resistance to corrosion
- Low friction coating or chrome coating are available on request. Please contact Ewellix.

Fig. 3

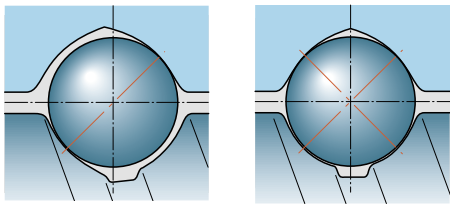

SN *BN*

Operating temperature

Screws made from standard steel and screws operating under normal loads can operate from –20 to +110 °C.

Between 110 °C and 130 °C, Ewellix must be notified for adaptation of the annealing procedure and for review of the application with hardness below the standard minimum value.

Above 130 °C, steel adapted to the temperature of the application should be selected (100Cr6, special steel, etc.). Please consult Ewellix for advice.

Operation at high temperatures will lower the steel hardness, alter the thread accuracy, may increase the oxidation of the materials and change the lubricant properties.

Ball screw support bearings

To assist the customer design and machinery assembly process, Ewellix has developed a range of support bearings specifically designed for ball screws with nominal diameter starting from 16 mm. These support bearings can easily be mounted on the screw shaft ends, following Ewellix recommendations for ends machining (↳ **pages 45** to **49**). Three types of support bearings available for fixed axial mounting (FLBU type in **pages 50** to **51**), for fixed radial mounting (PLBU type in **pages 52** to **53**) and for pure radial support (BUF type in **pages 54** to **55**), all fitted with SKF premium bearings, greased and sealed for life. Ewellix stocks these support bearings for quick delivery.

Designing the screw shaft ends

Generally speaking, when the ends of the screw shaft are specified by the customer's engineering staff, it is their responsibility to check the strength of these ends. However, we offer and recommend a choice of standard machined ends (↳ **pages 45** to **49**).

Please bear in mind that no dimension on the shaft ends can exceed d_2. Otherwise, traces of the root of the thread will appear. If the application requires a shaft end with a smooth surface of diameter greater than d_2, it is advisable to add an additional part attached to the machined shaft end.

A minimum shoulder should be sufficient to maintain the bearing inner ring. Please follow bearing mounting recommendations.

Critical applications

The standard products have been fitted with composite ball recirculation inserts.

If the ball screws are used in severe applications, or if the inserts are used to prevent system collapse (especially in the case of vertical applications), optional steel inserts are available. For critical applications, Ewellix also offers optional safety rings for miniature ball screws, and safety nuts for larger ball screws.

In such cases, the customer should consult Ewellix to define the optimum solution.

Working environment

Our products have not been developed for use in an explosive environment. Consequently, Ewellix cannot take any responsibility for the use of ball screws in such applications.

Fig. 4

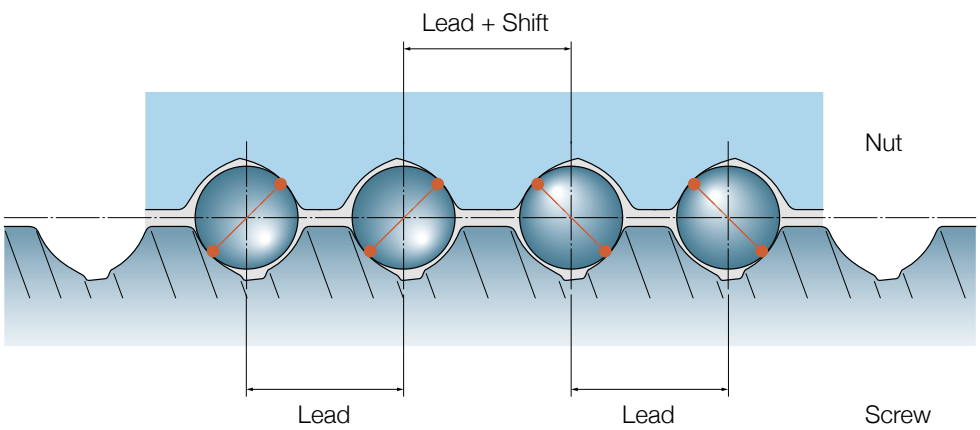

Calculation formulae

Basic life rating

$$L_{10} = \left(\frac{C_a}{F_m}\right)^3$$

Required load rating

$$C_{req} = F_m \, (L_{10})^{1/3}_{req}$$

where

L_{10} = life [million revolutions]

C_a = basic dynamic load rating [N]

C_{req} = required dynamic load rating [N]

F_m = cubic mean load [N]

Equivalent mean load

- Duty cycle with step loading

$$F_m = \frac{(F_1^3 L_1 + F_2^3 L_2 + F_3^3 L_3 + \ldots)^{1/3}}{(L_1 + L_2 + L_3 + \ldots)^{1/3}}$$

where

L_n = load period n (↳ **diagram 2**)

F_n = load during period n (↳ **diagram 2**)

F_n can be a fixed value, or F_n can be calculated using the following formulae for F_m

- Duty cycle with continuous load variation

$$F_m = \frac{F_{min} + 2F_{max}}{3}$$

where

F_{min} = minimum load (↳ **diagram 3**)

F_{max} = maximum load (↳ **diagram 3**)

Critical speed of screw shaft (no safety factor)

$$n_{cr} = 49 \times 10^6 \frac{f_1 \, d_2}{l^2}$$

where

n_{cr} = critical speed [rpm]

d_2 = root diameter [mm]

l = free length, or distance between the two support bearings [mm]

f_1 = mounting correction factor

0,9 ●●——— fixed, free

3,8 ●●———● fixed, radial support

5,6 ●●——●● fixed, fixed

Note: it is generally recommended to apply a safety factor of 0,8 to the calculated value of the critical speed ncr of the screw shaft.

Speed limit of the mechanism (maximal speed applied through very short periods)

With recirculation by inserts / tubes (SD/BD/SH-SDS/BDS/SHS-SX/BX-SND/BND/PND-SN/BN/PN):

$n \, d_0 < 50\,000$

With recirculation through flange (SL/TL-SLD/TLD):

$n \, d_0 < 90\,000$

If $n \, d_0 > 50\,000$ or 90 000 respectively, please consult Ewellix

where

n = rotational speed [rpm]

d_0 = screw shaft nominal diameter [mm]

Maximum admissible acceleration is 4 000 rad/s²

Buckling strength, with safety factor 3

$$F_c = \frac{34 \times 10^3 f_3 \, d_2^4}{l^2}$$

where

F_c = buckling strength [N]

d_2 = root diameter [mm]

l = free length, or distance between the two support bearings [mm]

f_3 = mounting correction factor

0,25 ●●——— fixed, free

2 ●●———● fixed, radial support

4 ●●——●● fixed, fixed

Diagram 2

Equivalent mean load

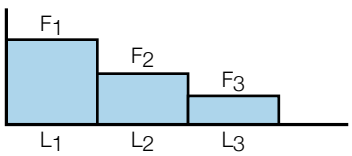

Diagram 3

Equivalent mean load

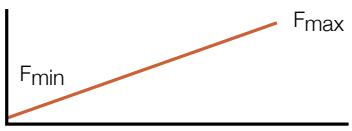

Theoretical efficiencies

Direct (↳ **fig. 11**)

$$\eta = \frac{1}{1 + \frac{\pi d_0}{P_h} \mu}$$

where

μ = 0,0065 for SH/SHS

μ = 0,006 for SD/BD, SDS/BDS, SX/BX, SND/BND/PND, SN/BN/PN, SL/TL, SLT/TLT

d_0 = nominal diameter of screw shaft [mm]

P_h = lead [mm]

Indirect (↳ **fig. 12**)

$$\eta' = 2 - \frac{1}{\eta}$$

Practical efficiency

$$\eta_p = 0{,}9\ \eta$$

The value 0,9 is an average value between the practical efficiency of a new screw and that of a properly run-in screw.

It should be used for industrial applications in all normal working conditions. For extreme cases, please contact Ewellix.

Input torque in a steady state

$$T = \frac{F\ P_h}{2\ 000\ \mu\ \eta_p}$$

where

T = input torque [Nm]

F = maximum load of the cycle [N]

P_h = lead [mm]

η_p = practical efficiency

Power requirement in a steady state

$$P = \frac{F_n\ P_h}{60\ 000\ \eta_p}$$

where

P = power required [W]

n = revolutions per minute [rpm]

Preload torque [Nm]

$$T_{pr} = \frac{F_{pr}\ P_h}{1\ 000\ \pi} \left(\frac{1}{\eta_{pr}} - 1\right)$$

where

T_{pr} = preload torque [N]

F_{pr} = preload [N]

η_{pr} is calculated using μ = 0,01 for preloaded system

Restraining torque (considering a back-driving system)

$$T_B = \frac{F\ P_h\ \eta'}{2\ 000\ \pi}$$

where

T_B = restraining torque [Nm]

F = load [N]

For safety reasons, we use the theoretical indirect efficiency.

Fig. 11

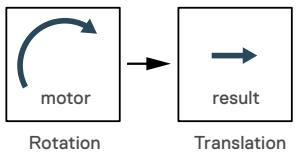

Fig. 12

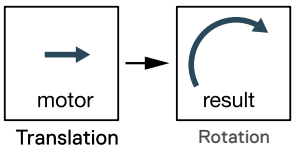

Nominal motor torque during acceleration

For a horizontal screw

$$T_r = T_f + T_{pr} + \frac{P_h [F + m_L \mu_f g]}{2\,000\,\pi\,\eta_p} + \acute{\omega}\,\Sigma I$$

For a vertical screw

$$T_r = T_f + T_{pr} + \frac{P_h [F + m_L g]}{2\,000\,\pi\,\eta_p} + \acute{\omega}\,\Sigma I$$

where

T_t = nominal torque [Nm]

T_f = torque from friction in support bearings, motors, seals, etc… [Nm]

T_{pr} = preload torque [Nm]

μ_f = coefficient of friction

$\acute{\omega}$ = angular acceleration [rad/s²]

m_L = mass of the load [kg]

g = acceleration of gravity [9,8 m/s²]

ΣI = $I_M + I_L + I_S\, l\, 10^{-9}$

Nominal braking torque during deceleration

For a horizontal screw

$$T'_t = T_f + T_{pr} + \frac{P_h \eta' [F + m_L \mu_f g]}{2\,000\,\pi} + \acute{\omega}\,\Sigma I$$

For a vertical screw

$$T'_t = T_f + T_{pr} + \frac{P_h \eta' [F + m_L g]}{2\,000\,\pi} + \acute{\omega}\,\Sigma I$$

where

$$I_L = m_L \left(\frac{P_h}{2\,\pi}\right)^2 10^{-6}$$

where

I_M = inertia of motor [kgm²]

I_S = inertia of screw shaft per metre [kgmm²/m]

l = length of screw shaft [mm]

Static axial stiffness of a complete ball screw assembly

$$\frac{1}{R_t} = \frac{1}{R_s} + \frac{1}{R_n} + \frac{1}{R_p}$$

where

R_t = stiffness of a complete assembly [N/µm]

R_s = shaft stiffness [N/µm]

R_n = nut stiffness [N/µm]

R_p = support bearings stiffness [N/µm]

Shaft stiffness

Fixed-free or fixed-radial support

$$R_s = 165\,\frac{d_2^{\,2}}{l_1}$$ (↳ **fig. 13**)

Fixed-fixed assembly

$$R_s = \frac{165\, d_2^{\,2}\, l_2}{l_1 (l_2 - l_1)}$$ (↳ **fig. 14**)

where

l_1 = distance center of fixed support bearing to center of nut [mm]

l_2 = distance between centers of fixed support bearings

For additional information, please contact Ewellix.

Fig. 13

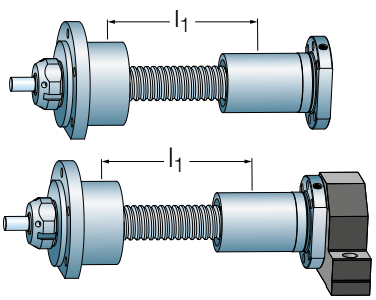

Fig. 14

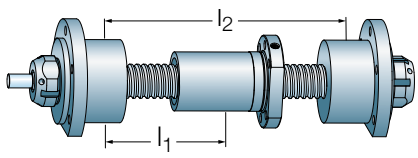

Calculation example for a ball screw

Description of customer application:

- **Ball screw type PND 25 × 5. Ball screw is described (↳ page 34):** Nut with internal preload, 2 × 3 circuits, dynamic carrying capacity C_a = 12,7 kN, and static carrying capacity Coa = 22,7 kN

- **Screw shaft is horizontally mounted and supported by two support bearings of types PLBU25 and BUF25**

- **Load cycle as follows:**
  - Phase 1:
    Steady axial load of 3 kN, on travel of 900 mm, with linear speed 100 mm/s, or phase duration of 9 seconds
  - Phase 2:
    Regular load increase from 3 kN to 7 kN, on travel of 100 mm, with linear speed 10 mm/s, or phase duration of 10 seconds
  - Phase 3:
    Nut return to initial position, with steady load of 2 kN, on travel of 1 000 mm, with linear speed 100 mm/s, or phase duration of 10 seconds
  - Then period of 31 seconds with zero load, no displacement
  - Operation during 7 hours per day, 5 days per week, 50 weeks per year.

Fig. 15

Shaft end 2A for PND 25×5

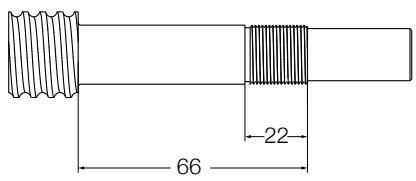

Fig. 16

Shaft end 4A for PND 25×5

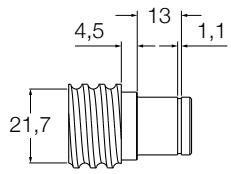

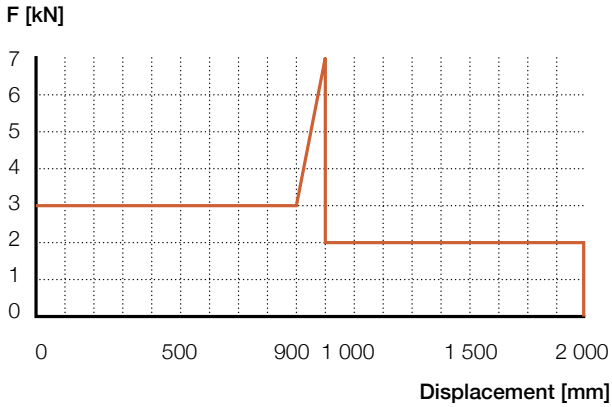

Calculation of equivalent mean load

First, we check that the maximum load from the duty cycle does not create an excessive loading condition that would be detrimental to service life. Please refer to explanation in paragraph "Service life" (↳ **page 9**).

Maximum application load = 7 kN,

while 60% of C_a = 60% × 12,7 = 7,6 kN ⟹ OK

F_1 = 3 000 N on L_1 = 900 mm

$$F_2 = \frac{3\,000 + 2 \times 7\,000}{3} = 5\,667 \text{ N}$$ on L_2 = 1 000 mm

on L_3 = 1 000 mm

F_3 = 2 000 N

$$F_m = \sqrt[3]{\frac{3\,000^3 \times 900 + 5\,667^3 \times 100 + 2\,000^3 \times 1\,000}{900 + 100 + 1\,000}} = 2\,934 \text{ N}$$

Calculation of basic life rating L_{10}

$$L_{10} = \left(\frac{12\,700}{2\,934}\right)^3 = 81{,}1 \text{ millions revolutions}$$

Number of nut revolutions per one complete cycle
= (2 × 1 000) / 5 = 400 revolutions

Or (81,1 × 10^6) / 400 = 202 750 complete cycles

One complete cycle lasts (9 + 10 +10 + 31) = 60 seconds

Or life rating of (202 750 × 60) / (3 600 × 7 × 5 × 50)
= 1,9 years with 90% reliability

Critical speed of screw shaft

The critical speed must be checked, especially when the nut travel is long compared to the shaft diameter. Maximum speed during the duty cycle:

$$V_{max} = \frac{100}{5} \times 60 = 1\,200 \text{ rpm}$$

The shaft threaded length is calculated with considering the total nut travel (1 000 mm), plus the nut length (62 mm), plus extra free length at each shaft end equal to two leads (2 × 2 × 5 = 20 mm).

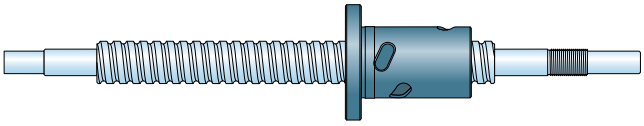

Screw assembly is horizontally mounted. End machining is 2A for support bearing PLBU25, and end machining is type 4A for support bearing BUF25. The combination of 2A + 4A ends machining is called HA when ordering the screw (↳ **page 44**).

So total threaded length = 1 082 mm

For end type 2A, with screw nominal diameter d_0 = 25 mm, the central axial position of the bearings is calculated with data from **pages 45** and **46**:

$(B_1 - G_1) / 2 = (66 - 22) / 2 = 22$ mm from the end of the threaded shaft (↳ **fig. 15**).

For end type 4A, with screw nominal diameter d_0 = 25 mm, the central axial position of the bearing is calculated with data from **pages 45** and **46**:

$B_7 + ((B_5 - m) / 2) = 4{,}5 + ((13 - 1{,}1) / 2) = 11$ mm from the end of the threaded shaft (↳ **fig. 16**).

The free length between the two support bearings is:

$l = 1\,082 + 22 + 11 = 1\,115$ mm

The root diameter of the threaded shaft is:

d_2 = 21,7 mm (↳ **page 35** or **44**).

Calculation of critical speed:

$$n_{cr} = 49 \times 10^6 \frac{3{,}8 \times 21{,}7}{1\,115^2} = 3{,}250 \text{ rpm} > V_{max} \Rightarrow \text{OK}$$

Speed limit

$n \times d0 = 1\,200 \times 25 = 30\,000 < 50\,000 \Rightarrow$ OK

Buckling strength

$$F_c = \frac{34{,}10^3 \times 2 \times 21{,}7^4}{1\,115^2} = 12{,}1 \text{ kN} > F_{max} = 7 \text{ kN} \Rightarrow \text{OK}$$

Theoretical direct efficiency

$$\eta = \frac{1}{1 + \frac{\pi \times 25}{5} \times 0{,}006} = 0{,}914$$

Theoretical indirect efficiency

$$\eta' = 2 - \frac{1}{0{,}914} = 0{,}906$$

Practical efficiency

$\eta_p = 0{,}9 \times 0{,}914 = 0{,}823$

Input torque in a steady state

$$T = \frac{7\,000 \times 5}{2\,000\,\pi \times 0{,}823} = 6{,}8 \text{ Nm}$$

Power requirement in a steady state

$$\text{Phase 1: } P = \frac{3\,000 \times 1\,200 \times 5}{60\,000 \times 0{,}823} = 365 \text{ W}$$

$$\text{Phase 2: } P = \frac{7\,000 \times 1\,200 \times 5}{60\,000 \times 0{,}823} = 85 \text{ W}$$

$$\text{Phase 3: } P = \frac{3\,000 \times 1\,200 \times 5}{60\,000 \times 0{,}823} = 243 \text{ W}$$

Lead precision

Manufacturing precision

Generally speaking, the precision indicated defines the lead precision that complies with ISO standards, e.g. G5, G7, etc. (↳ **table 1**).

Parameters other than lead precision correspond to Ewellix internal standards, generally based on ISO class 7. If the application requires special tolerances, for example class 5, please specify these requirements in the inquiry.

Ewellix high precision rolled ball screws

High technology machinery associated with precise control of the cold forming and metallurgical processes results in screw production that virtually offers the same accuracy and performance level of ground ball screws, but at a lower cost (↳ **diagram 1**). Standard lead precision is G9, which complies with ISO 286-2:1988. Ewellix production meets G7 lead precision for screw shaft diameters starting from d_0 = 20 mm. On request, Ewellix can deliver ball screws with G5 lead precision which are in accordance with ISO 3408-3:2006, defined for positioning screws and matching the lead precision of G5 ground ball screws.

Lead precision

Lead precision is measured at 20 °C on the useful stroke l_u. At Ewellix l_u is the threaded length of the shaft minus twice the length l_e equal to the screw nominal diameter (↳ **table 1** and **fig. 7**).

Some customer applications require a travel compensation c to account for the effect of operating temperature on the lead precision:

- Standard case with c = 0 (↳ **fig. 8**)
- Case with specific value of c (↳ **fig. 9**).

Diagram 1

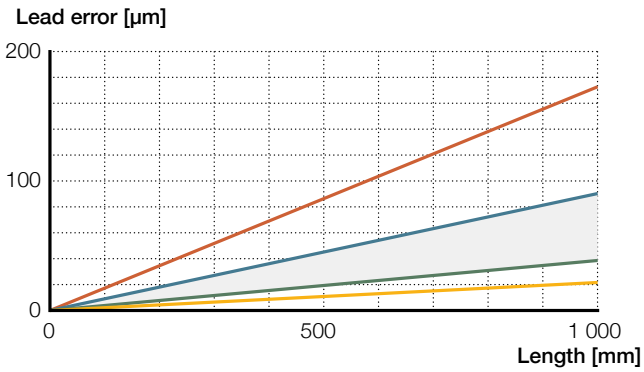

ISO standard rolled screws G7
Ewellix high precision rolled screws G5
Ewellix high precision rolled screws G7
Ground screws G3

Table 1

		G5		G7		G9	
V_{300p} µm			23		35		87
l_u mm		e_p µm	v_{up}	e_p	v_{up}	e_p	v_{up}
0	– 315	23	23	52	35	130	87
(315)	– 400	25	25	57	40	140	100
(400)	– 500	27	26	63	46	155	115
(500)	– 630	32	29	70	52	175	130
(630)	– 800	36	31	80	57	200	140
(800)	– 1 000	40	34	90	63	230	155
(1 000)	– 1 250	47	39	105	70	260	175
(1 250)	– 1 600	55	44	125	80	310	200
(1 600)	– 2 000	65	51	150	90	370	230
(2 000)	– 2 500	78	59	175	105	440	260
(2 500)	– 3 150	96	69	210	125	530	310
(3 150)	– 4 000	115	82	260	150	640	370
(4 000)	– 5 000	140	99	320	175	790	440
(5 000)	– 6 000	170	119	390	210	960	530

Lead precision measurement

Symbols used in figs. 7 to 9

l_u = useful travel
l_e = excess travel (no lead precision required)
l_0 = nominal travel
l_s = specified travel
c = travel compensation (difference between l_s and l_0 to be defined by the customer)
e_p = tolerance over the specified travel
V = travel variation (or permissible band width)
V_{300p} = maximum permitted travel variation over 300 mm
V_{up} = maximum permitted travel variation over the useful travel l_u
V_{300a} = measured travel variation over 300 mm
V_{ua} = measured travel variation over l_u

Fig. 7

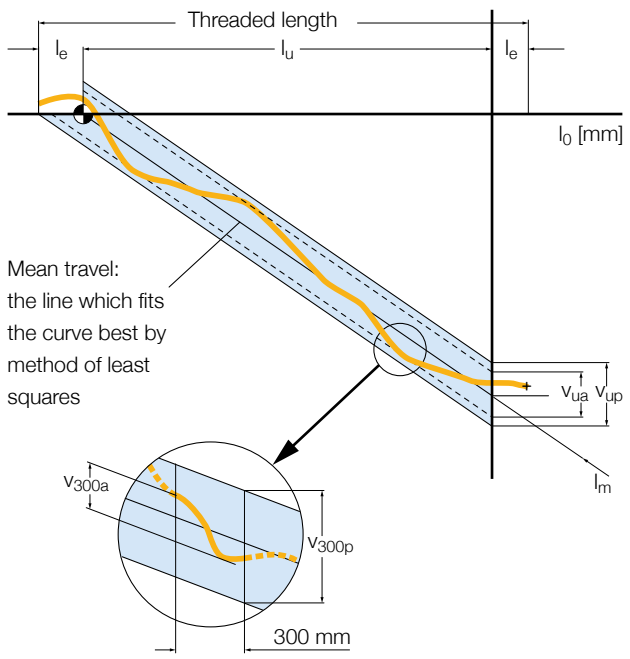

Fig. 8

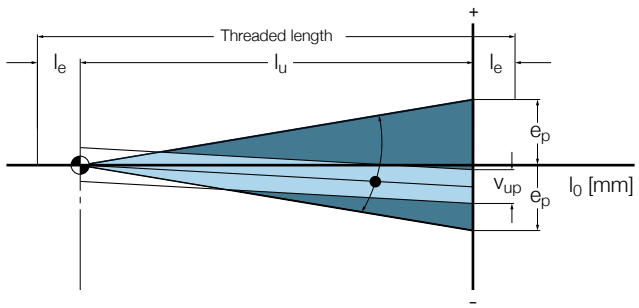

Fig. 9

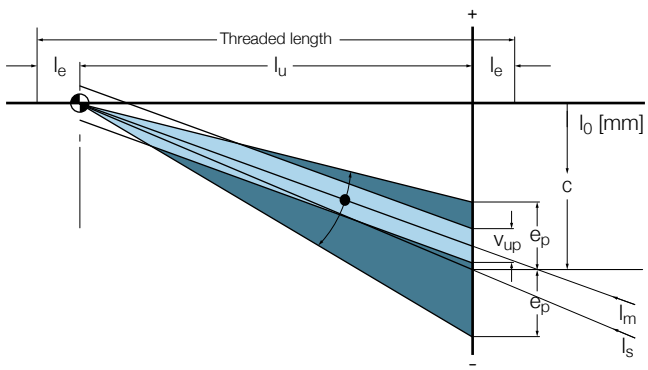

3

Product range

SD/BD/SH miniature screws

Rolled thread miniature ball screw, nut with threaded nose

Features

- Nominal diameter from 6 to 16 mm
- Lead from 2 to 12,7 mm
- Recirculation with inserts (SD/BD) or with tube (SH)
- Optional surface coating on shaft and nut
- Optional safety ring[1)]
- Optional wipers[2)] except 6×2 R – 10×3 R.

Benefits

- Excellent repeatability with high positioning accuracy
- Smooth running
- Extremely compact nut design with threaded nose for easy assembly
- Backlash elimination by oversized balls on request (BD designation), over maximum length of 1 000 mm.

Standard SD/BD

Standard SH

Customised SD

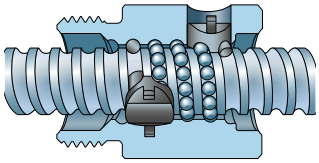

Recirculation SD/BD

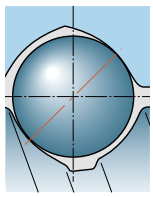

SD

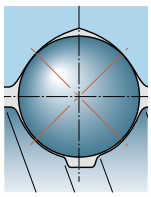

BD

Technical data

Nominal diameter	Lead (right hand)	Nut Basic load ratings dynamic	static	Number of circuits of balls	Std play	Reduced play on request	Inertia	Grease	Weight	Screw Mass	Inertia	Grease	Designation
d_0 mm	P_h mm	C_a kN	C_{oa}	–	mm		kgmm²	cm³	kg	kg/m	kgmm²/m	cm³/m	–
6	2	1,9	2,2	1×2,5	0,05	0,02	7,7	0,1	0,025	0,18	0,7	0,7	**SH 6×2 R**
8	2,5	2,2	2,7	3	0,07	0,03	1,12	0,1	0,025	0,32	2,1	1,1	**SD/BD 8×2.5 R**
10	2	2,5	3,6	3	0,07	0,03	1,7	0,1	0,03	0,51	5,2	1,4	**SD/BD 10×2 R**
	3	2,6	3,3	1×2,5	0,07	0,03	2,9	0,3	0,05	0,5	5,1	1,3	**SH 10×3 R**
	4	4,5	5,5	3	0,07	0,03	2,7	0,3	0,04	0,43	3,8	1,3	**SD/BD 10×4 R**
12	2	2,9	4,7	3	0,07	0,03	1,5	0,1	0,023	0,67	10	1,7	**SD/BD 12×2 R**
	4	4,9	6,6	3	0,07	0,03	7	0,4	0,066	0,71	10,8	1,6	**SD/BD 12×4 R**
	5	4,2	5,4	3	0,07	0,03	5	0,6	0,058	0,71	10,1	1,4	**SD/BD 12×5 R**
12,7	12,7	6,6	8,9	2×1,5	0,07	0,03	20	1,1	0,15	0,71	16,2	1,6	**SH 12,7×12,7 R**
14	4	6	9,1	3	0,07	0,03	8	0,6	0,083	1,05	22	1,7	**SD/BD 14×4 R**
16	2	3,3	6,2	3	0,07	0,03	9,2	0,6	0,1	1,4	39,7	1,7	**SD/BD 16×2 R**
	5	7,6	10,7	3	0,07	0,03	22,7	0,9	0,135	1,3	33,9	2,1	**SD/BD 16×5 R**
	10	10,7	17,2	2×1,8	0,07	0,03	24,4	1	0,16	1,21	30,7	1,9	**SD/BD 16×10 R**

[1)] Available for 12™4 R – 12,7™12,7 R – 14™4 R – 16™5 R – 16™10 R
[2)] It is not possible to supply safety ring and wipers in the same nut

EWELLIX

Dimensional drawing

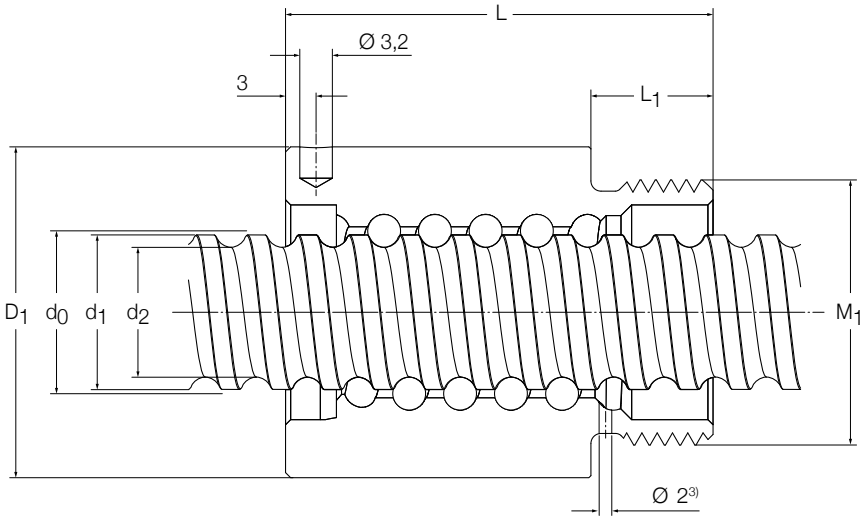

Screw	Nut						Screw			Support bearings	
			Without wipers	With wipers		Tightening spanner (FACOM)				Recommended thrust support bearings	Recommended support pillow block
$d_0 \times P_h$	D_1	M_1	L		L_1		length	d_2	d_1		
	h10	6g	±0,3				max				
mm	mm	mm	mm		mm	–	mm	mm	mm	–	
6×2	16,5	M14×1	20	–	7,5	126-A35	1 000	4,7	6		
8×2,5	17,5	M15×1	23,5	23,5	7,5	126-A35	1 000	6,3	7,6		
10×2	19,5	M17×1	22	22	7,5	126-A35	1 000	8,3	9,5		
10×3	21	M18×1	29	–	9	126-A35	1 000	7,9	9,9		
10×4	21	M18×1	28	31	8	126-A35	1 000	7,4	8,9		
12×2	20	M18×1	20	23,5	8	126-A35	2 000	9,9	11,2		
12×4	25,5	M20×1	34	34	10	126-A35	2 000	9,4	11,3		
12×5	23	M20×1	36	40	10	126-A35	2 000	9,3	11,8		
12,7×12,7	29,5	M25×1,5	50	50	12	126-A35	2 000	10,2	13		
14×4	27	M22×1,5	30	34	8	126-A35	2 000	11,9	13,7		
16×2	29,5	M25×1,5	27	27	12	126-A35	2 000	14,3	15,5	**FLBU 16/PLBU 16**	**BUF 16**
16×5	32,5	M26×1,5	42	42	12	126-A35	2 000	12,7	15,2	**FLBU 16/PLBU 16**	**BUF 16**
16×10	32	M26×1,5	46	46	12	126-A35	2 000	12,6	15,2	**FLBU 16/PLBU 16**	**BUF 16**

SDS/BDS/SHS miniature screws in stainless steel

Rolled thread miniature ball screw, nut with threaded nose

Features

- Nominal diameter from 6 to 16 mm
- Lead from 2 to 5 mm
- Standard lead precision G7 and G9
- Material for shaft and nut is X30Cr13 (similar to AISI 420)
- Balls are made of stainless steel type X105CrMo17 (similar to AISI 440C)[1]
- Optional safety ring[2]
- Optional wipers[3] except for SHS 2 R.

Benefits

- Excellent repeatability with high positioning accuracy
- Smooth running
- Extremely compact nut design with threaded nose for easy assembly
- Backlash elimination by oversized balls on request (BDS designation), over maximum length of 1 000 mm
- Suitable for long storage periods before customer usage, or for applications with extremely long service life
- Adapted for operation in clean environment.

Standard SDS/BDS

Standard SHS

Customised SDS

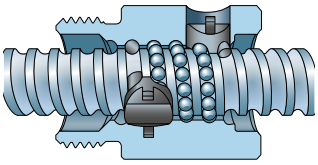

Recirculation SD/BD

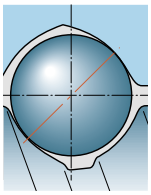

SD

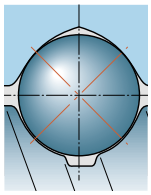

BD

Technical data

Nominal diameter	Lead (right hand)	Nut Basic load ratings dynamic	static	Number of circuits of balls	Std play	Reduced play on request	Inertia	Grease	Weight	Screw Mass	Inertia	Grease	Designation
d_0 mm	P_h mm	C_a kN	C_{oa}	–	mm		kgmm²	cm³	kg	kg/m	kgmm²/m	cm³/m	–
6	2	1,2	1,1	1×2.5	0,05	0,02	7,7	0,1	0,025	0,18	0,7	0,7	**SHS 6×2 R**
8	2,5	1,4	1,3	3	0,07	0,03	1,12	0,1	0,025	0,32	2,1	1,1	**SDS/BDS 8×2,5 R**
10	2	1,6	1,8	3	0,07	0,03	1,7	0,1	0,03	0,51	5,2	1,4	**SDS/BDS 10×2 R**
12	2	1,9	2,3	3	0,07	0,03	1,5	0,1	0,023	0,67	10	1,7	**SDS/BDS 12×2 R**
	4	3,1	3,3	3	0,07	0,03	7	0,4	0,066	0,71	10,8	1,6	**SDS/BDS 12×4 R**
	5	2,7	2,7	3	0,07	0,03	5	0,6	0,058	0,71	10,1	1,4	**SDS/BDS 12×5 R**
14	4	3,8	4,6	3	0,07	0,03	8	0,6	0,083	1,05	22	1,7	**SDS/BDS 14×4 R**
16	2	2,1	3,1	3	0,07	0,03	9,2	0,6	0,1	1,4	39,7	1,7	**SDS/BDS 16×2 R**
	5	4,8	5,4	3	0,07	0,03	22,7	0,9	0,135	1,3	33,9	2,1	**SDS/BDS 16×5 R**

[1] Except for size SDS/BDS 16x5 R using steel type 100 Cr6 (similar to AISI 52100)
[2] Available for 12x4 R – 14x4 R – 16x5 R
[3] It is not possible to supply safety ring and wipers in the same nut

Dimensional drawing

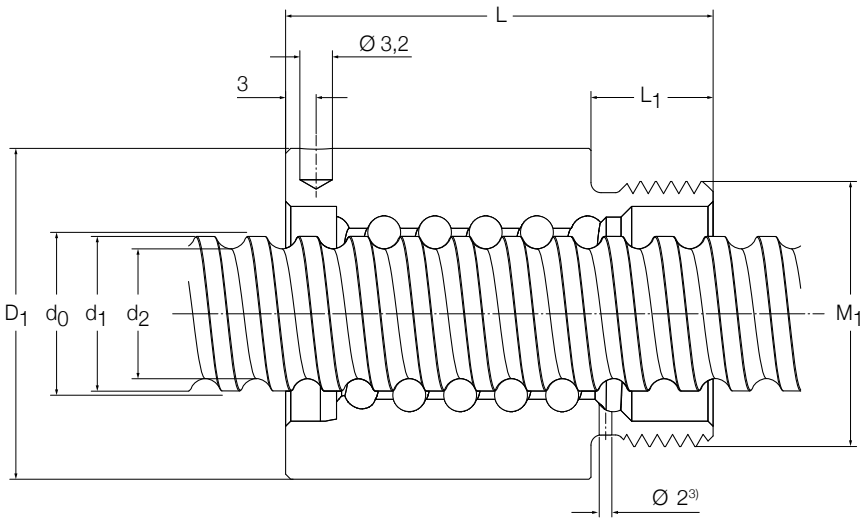

Screw	Nut						Screw			Support bearings	
$d_0 \times P_h$ mm	D_1 h10 mm	M_1 6g mm	Without wipers L ±0,3 mm	With wipers	L_1 mm	Tightening spanner (FACOM) –	length max mm	d_2 mm	d_1 mm	Recommended thrust support bearings –	Recommended support pillow block
6×2	16,5	M14×1	20	–	7,5	126-A35	1 000	4,7	6		
8×2,5	17,5	M15×1	23,5	23,5	7,5	126-A35	1 000	6,3	7,6		
10×2	19,5	M17×1	22	22	7,5	126-A35	1 000	8,3	9,5		
12×2	20	M18×1	23,5	23,5	8	126-A35	2 000	9,9	11,2		
12×4	25,5	M20×1	34	34	10	126-A35	2 000	9,4	11,3		
12×5	23	M20×1	40	40	10	126-A35	2 000	9,3	11,8		
14×4	27	M22× 1,5	34	34	8	126-A35	2 000	11,9	13,7		
16×2	29,5	M25×1,5	27	27	12	126-A35	2 000	14,3	15,5	FLBU 16/PLBU 16[4)]	BUF 16[4)]
16×5	32,5	M26×1,5	42	42	12	126-A35	2 000	12,7	15,2	FLBU 16/PLBU 16[4)]	BUF 16[4)]

[4)] Support bearings with standard steel

SP/BP high-performance miniature screws

Rolled thread miniature ball screw, nut with threaded nose

Features

- Nominal diameter from 8 to 16 mm
- Lead from 2 to 5 mm
- Standard lead precision G7 and G9
- Reduces tangential efforts on the recirculating balls
- Enables up to 2.4 times higher speed limits (ndo < 120 000)
- Reduces noise levels
- Enables smoother running
- Provides much longer service life
- Interchangeable with most existing standard solutions
- Lubrication hole and wiper housings are standard
- Customized axial play and backlash elimination available
- Same attachment as existing series SD

SP/BP

SP/BP

Benefits

- Smooth running
- Low noise levels
- High speed capability
- Provides longer service
- Easy nut assembly
- Excellent repeatability
- High positioning accuracy

Technical data

Nominal diameter	Lead (right hand)	Nut Basic load ratings dynamic	static	Number of circuits of balls	Std play	Reduced play on request	Inertia	Grease	Weight	Screw Mass	Inertia	Grease	Designation
d_0 mm	P_h mm	C_a kN	C_{oa}	–	mm		kgmm²	cm³	kg	kg/m	kgmm²/m	cm³/m	–
8	2,5	2,2	2,7	1×2,7	0,07	0,03	1,14	0,1	0,024	0,32	2,1	1.1	**SP/BP 8×2,5 R**
10	4	4,5	5,5	1×2,7	0,07	0,03	4,53	0,3	0,056	0,43	3,8	1,3	**SP/BP 10×4 R**
	5	4,6	5,9	1×2,7	0,07	0,03	5,9	0,5	0,070	0,43	4,0	1,3	**SP/BP 10×5 R**
12	2	2,9	4,7	1×2,7	0,07	0,03	2,25	0,1	0,031	0,67	10	1,7	**SP/BP 12×2 R**
	4	4,9	6,6	1×2,7	0,07	0,03	7,13	0,4	0,070	0,71	10,8	1,6	**SP/BP 12×4 R**
	5	4,2	5,4	1×2,7	0,07	0,03	8,02	0,6	0,078	0,71	10,1	1,4	**SP/BP 12×5 R**
16	5	7,6	10,7	1×2,7	0,07	0,03	24,02	0,9	0,14	1,3	33,9	2,1	**SP/BP 16×5 R**

Dimensional drawing

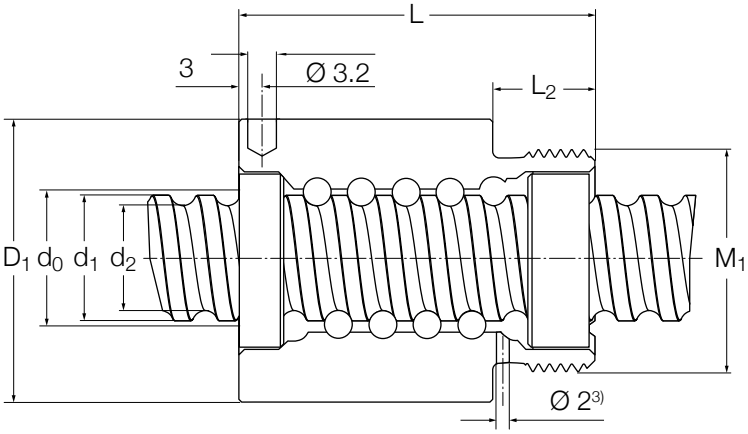

Screw	Nut						Screw			Support bearings	
$d_0 \times P_h$ mm	D_1 h10 mm	M_1 6g mm	Without wipers L ±0,3 mm	With wipers	L_1 mm	Tightening spanner (FACOM) –	length max mm	d_2 mm	d_1 mm	Recommended thrust support bearings –	Recommended support pillow block
8×2,5	17,5	M15×1	23,5	23,5	7,5	126-A35	1000	6,3	7,6		
10×4	23	M18×1	33	33	8	126-A35	1000	7,4	8,9		
10×5	23	M18×1	39,5	–	10	126-A35	2000	7,4	8,9		
12×2	21	M18×1	23,5	23,5	8	126-A35	2000	9,9	11,2		
12×4	25,5	M20×1	34	34	10	126-A35	2000	9,4	11,3		
12×5	25,5	M20×1	40	40	10	126-A35	2000	9,3	11,8		
16×5	32,5	M26×1,5	42	42	12	126-A35	2000	12,7	15,2	**FLBU 16/PLBU 16**	**BUF 16**

SX/BX universal screws

Rolled thread ball screw with recirculation through inserts, nut with threaded nose

Features

- Nominal diameter from 20 to 63 mm
- Lead from 5 to 40 mm
- Standard composite recirculation inserts
- Optional steel recirculation inserts
- Lubrication hole for grease nipple or for automatic lubrication kit
- Phosphate coating on nut
- Optional shaft surface coating
- Optional safety nuts. Please contact Ewellix for selection and usage of this option
- Optional nut flanges (↳ **pages 30** to **31**)
- Optional wipers[1].

Benefits

- Minimum nut outside diameter and threaded nose for easy assembly
- Nut design well suited and economical for transport screw applications
- Optional steel recirculation inserts can act as a safety device for severe or vertical applications. Please contact Ewellix for such applications
- Backlash elimination by oversized balls on request (BX designation) for applications with vibrations / changes of direction, over maximum length of 1 000 mm.

Standard

Customised

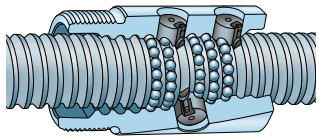

Recirculation

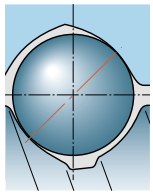

SX

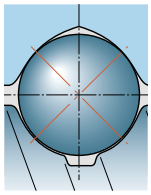

BX

Technical data

Nominal diameter	Lead (right hand)	Nut: Basic load ratings dynamic	Nut: Basic load ratings static	Nut: Number of circuits of balls	Nut: Std play	Nut: Reduced play on request	Nut: Preload torque zero play	Nut: Inertia	Nut: Grease	Nut: Weight	Screw: Mass	Screw: Inertia	Screw: Grease	Designation
d_0 mm	P_h mm	C_a kN	C_{oa}	–	mm		T_{pr} Nm	kgmm²	cm³	kg	kg/m	kgmm²/m	cm³/m	–
20	5	14	23,8	4	0,1	0,05	0,1	60	1,3	0,24	2	85	2,7	**SX/BX 20×5 R**
25	5	19	37,8	5	0,1	0,05	0,17	125	2,5	0,39	3,3	224	3,4	**SX/BX 25×5 R**
	10	23,5	39	4	0,12	0,08	0,23	135	4,6	0,4	3,2	255	3,2	**SX/BX 25×10 R**
32	5	22	51,6	5	0,1	0,05	0,25	230	2,6	0,48	5,6	641	4,4	**SX/BX 32×5 R**
	10	27,1	52	4	0,12	0,08	0,32	400	5,9	0,77	5,6	639	3,7	**SX/BX 32×10 R**
40	5	24,3	65,6	5	0,1	0,05	0,34	390	3,3	0,58	9	1 639	5,6	**SX/BX 40×5 R**
	10	61,5	124,1	5	0,12	0,08	0,64	840	12,4	1,25	8,4	1 437	5	**SX/BX 40×10 R**
	40	31,3	72,9	2x1,9	0,1	0,05	0,64	1 200	14,4	1,6	8,1	1 330	5,2	**SX/BX 40×40 R**
50	10	80,4	188,8	6	0,12	0,08	1,02	2 400	19,9	2,4	13,6	3 736	6,3	**SX/BX 50×10 R**
63	10	91,2	248,3	6	0,12	0,08	1,44	4 620	25,4	3,1	22	9 913	8,1	**SX/BX 63×10 R**

[1] Not available for SX/BX 40¥40

Dimensional drawing

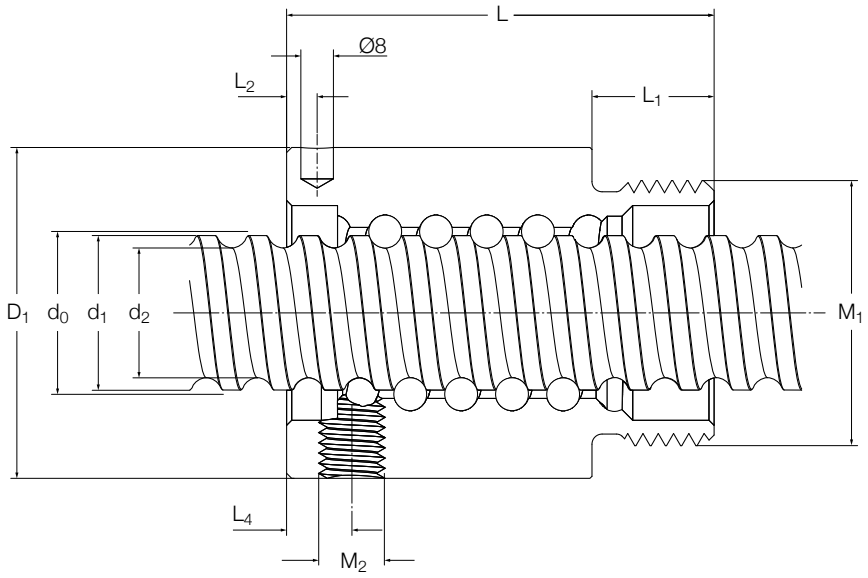

Screw	Nut								Screw			Support bearings	
								Tightening spanner				Recommended thrust support bearings	Recommended support pillow block
$d_0 \times P_h$	D_1	M_1	L	L_1	L_2	L_4	M2[1]		length	d_2	d_1		
	h10	6g							max				
mm	mm	mm						–	mm	mm	mm	–	
20×5	38	M35×1,5	54	14	8	8	M6×1	HN5	3 700	16,7	19,4	**PLBU 20/FLBU 20**[2]	**BUF 20**
25×5	43	M40×1,5	69	19	8	8	M6×1	HN6	4 700	21,7	24,6	**PLBU 25/FLBU 25**	**BUF 25**
25×10	43	M40×1,5	84	19	12	12	M6×1	HN6	4 700	20,5	24,6	**PLBU 25/FLBU 25**	**BUF 25**
32×5	52	M48×1,5	64	19	8	8	M6×1	HN7	5 700	28,7	31,6	**PLBU 32/FLBU 32**	**BUF 32**
32×10	54	M48×1,5	95	19	15	15	M6×1	HN7	5 700	27,8	32	**PLBU 32/FLBU 32/FLRBU 3**[3]	**BUF 32**
40×5	60	M56×1,5	65	19	8	8	M6×1	HN9	5 700	36,7	39,6	**PLBU 40/FLBU 40**	**BUF 40**
40×10	65	M60×2	105	24	15	13	M8×1	HN9	5 700	34	39,4	**PLBU 40/FLBU 40/FLRBU 4**[3]	**BUF 40**
40×40	65	M60×2	121	24	20	48,6	M8×1	HN9	5 700	34,2	38,3	**PLBU 40/FLBU 40**	**BUF 40**
50×10	78	M72×2	135	29	15	15	M8×1	HN12	5 700	44	49,7	**PLBU 50/FLBU 50/FLRBU 5**[3]	**BUF 50**
63×10	93	M85×2	135	29	15	15	M8×1	HN14	5 700	57	62,8	**PLBU 63/FLBU 63**	**BUF 63**

[1] Threaded lubrication hole M2 indexed to ISO thread M1
[2] For high load application, please contact Ewellix
[3] For high load application, use FLRBU type. Please refer to roller screws catalogue for end shaft and support bearings definitions

Dedicated flanges for SX/BX nuts

SX nut with round flange (FHRF)

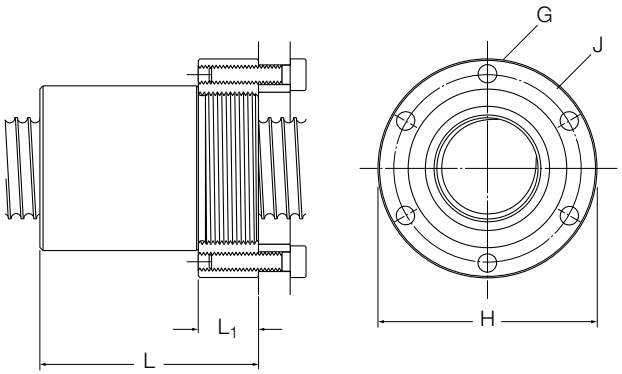

SX nut with square flange (FHSF)

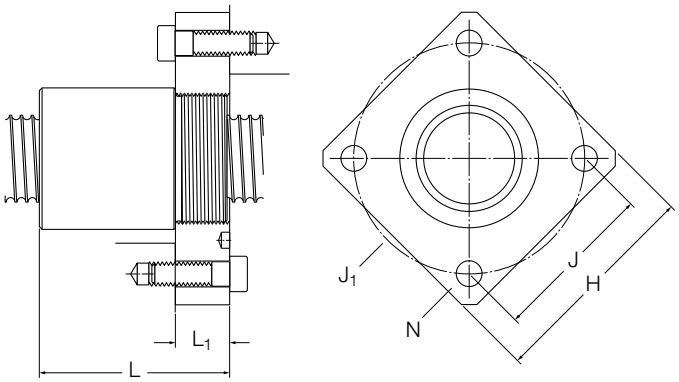

SX nut with trunnions flange (FHTF)

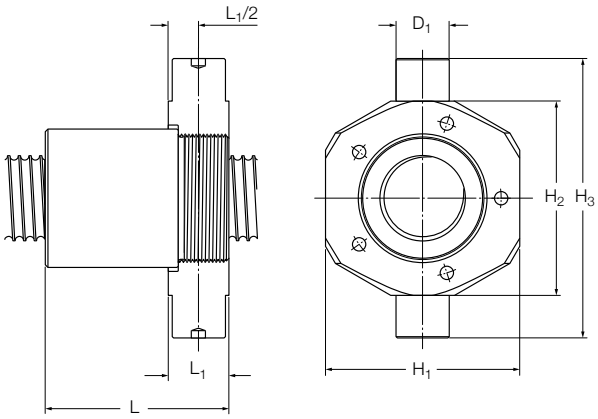

Nominal diameter	Lead	Dimensions					Designation
d_0	P_h	L	L_1 h14	G	H h12	J js12	
mm	mm	mm					–
20	**5**	55	15	M5	52	44	**FHRF 20**
25	**5**	70	20	M6	60	50	**FHRF 25**
	10	85	20	M6	60	50	**FHRF 25**
32	**5**	65	20	M6	69	59	**FHRF 32**
	10	96	20	M6	69	59	**FHRF 32**
40	**5**	66	20	M8	82	69	**FHRF 40×5**
	10	106	25	M10	92	76	**FHRF 40×10**
	40	122	25	M10	92	76	**FHRF 40×10**
50	**10**	136	30	M12	110	91	**FHRF 50**
63	**10**	136	30	M12	125	106	**FHRF 63**

Nominal diameter	Lead	Dimensions						Designation
d_0	P_h	L	L_1 h14	H h14	J js12	J_1	N	
mm	mm	mm						–
20	**5**	55	15	60	45	63,6	6,6	**FHSF 20**
25	**5**	70	20	70	52	73,5	9	**FHSF 25**
	10	85	20	70	52	73,5	9	**FHSF 25**
32	**5**	65	20	80	60	84,8	9	**FHSF 32**
	10	96	20	80	60	84,8	9	**FHSF 32**
40	**5**	66	20	90	70	99	11	**FHSF 40×5**
	10	106	25	100	78	110,3	13	**FHSF 40×10**
	40	122	25	100	78	110,3	13	**FHSF 40×10**
50	**10**	136	30	120	94	133	15	**FHSF 50**
63	**10**	136	30	130	104	147	15	**FHSF 63**

Nominal diameter	Lead	Dimensions						Designation	Bushing designation[1]
d_0	P_h	L	L_1	H_1 js16	H_2 h12	H_3 h12	D_1 h8		
mm	mm	mm						–	
20	5	57	17	55	56	80	15	**FHTF 20**	151710A
25	5	71	21	60	65	97	18	**FHTF 25**	182015A
	10	86	21	60	65	97	18	**FHTF 25**	182015A
32	5	68	23	73	73	105	20	**FHTF 32**	202315A
	10	99	23	73	73	105	20	**FHTF 32**	202315A
40	5	69	23	85	85	117	20	**FHTF 40×5**	202315A
	10	108,5	27,5	98	98	140	25	**FHTF 40×10**	252820A
	40	124,5	27,5	98	98	140	25	**FHTF 40×10**	252820A
50	10	139	33	120	120	162	30	**FHTF 50**	303420A
63	10	139	33	135	135	177	30	**FHTF 63**	303420A

[1] Recommended bushing to be mounted on the trunnions

SND/BND precision screws, DIN standard 69051

Rolled thread ball screw with recirculation through inserts, DIN nut

Features

- Nominal diameter from 16 to 63 mm
- Lead from 5 to 10 mm
- Standard composite recirculation inserts
- Optional steel recirculation inserts
- Standard lead precision G5, G7 and G9
- Nut ground outside diameter / flange face
- Precision ground nut thread[1)]
- Lubrication hole for grease nipple or for automatic lubrication kit
- Optional surface coating on shaft and nut
- Optional safety nuts. Please contact Ewellix for selection and usage of this option
- Optional wipers.

Benefits

- Compact nut / integral flange for easy assembly
- Design well suited for positioning screws. G5 lead precision of ground ball screws
- Optional steel recirculation inserts can act as a safety device for severe or vertical applications. Please contact Ewellix for such applications
- Backlash elimination by oversized balls on request (BND designation), over maximum length of 1 000 mm.

Standard

Assembly with flanged support bearing

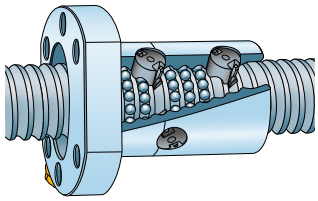

Recirculation

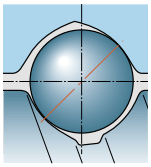

SND

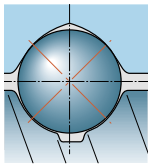

BND

Technical data

Nominal diameter	Lead (right hand)	Nut Basic load ratings dynamic	static	Number of circuits of balls	Std play	Reduced play on request	Preload torque zero play	Inertia	Grease	Weight	Screw Mass	Inertia	Grease	Designation
d_0 mm	P_h mm	C_a kN	C_{oa}	–	mm		T_{pr}	kgmm²	cm³	kg	kg/m	kgmm²/m	cm³/m	–
16	5	7,8	10,7	3	0,08	0,05	0,05	40	0,9	0,17	1,3	33	2,1	**SND/BND 16×5 R**
	10	10,7	17,2	2×1,8	0,07	0,03	0,06	41	1,6	0,18	1,21	30,7	2,1	**SND/BND 16×10 R**
20	5	11,3	17,9	3	0,1	0,05	0,08	86	1,1	0,24	2	85	2,7	**SND/BND 20×5 R**
25	5	12,7	22,7	3	0,1	0,05	0,11	117	1,6	0,29	3,3	224	3,4	**SND/BND 25×5 R**
	10	24,1	39	4	0,12	0,08	0,23	144	4,5	0,38	3,2	255	3,2	**SND/BND 25×10 R**
32	5	19	41,3	4	0,1	0,05	0,21	364	2,1	0,54	5,6	641	4,5	**SND/BND 32×5 R**
	10	21,9	39	3	0,12	0,08	0,25	384	4,6	0,58	5,6	639	4,2	**SND/BND 32×10 R**
40	5	25,6	65,6	5	0,1	0,05	0,25	855	3,1	0,92	9	1 639	5,6	**SND/BND 40×5 R**
	10	63,3	124,1	5	0,12	0,08	0,64	1 010	10,7	1,3	8,4	1 437	5,1	**SND/BND 40×10 R**
50	10	71,3	157,3	5	0,12	0,08	0,88	2 130	13,1	1,8	13,6	3 736	6,5	**SND/BND 50×10 R**
63	10	81,5	206,9	5	0,12	0,08	1,23	4 075	16,1	2,4	22	9 913	8,4	**SND/BND 63×10 R**

[1)] Except 16×10 R: nut thread is not ground

Dimensional drawing

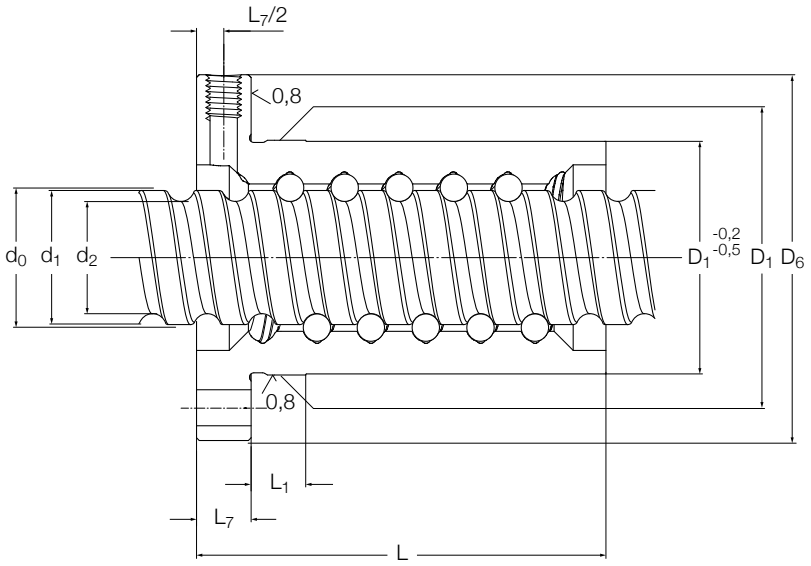

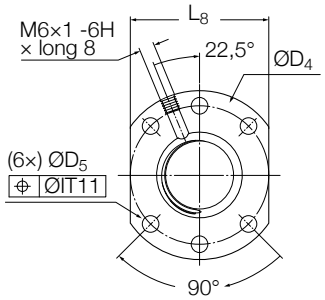

Design 1

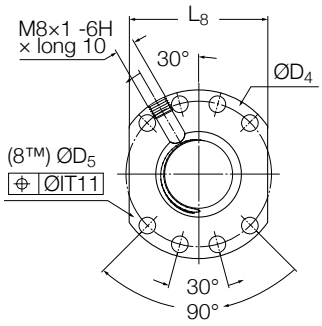

Design 2

Screw	Nut									Screw			Support bearings	
													Recommended thrust support bearings	Recommended support pillow block
d_0 x P_h	D_1	D_4	Design	D_5	D_6	L	L_1	L_7	L_8	length	d_2	d_1		
	6g			H13	h13				h13	max				
mm	mm			mm						mm			–	
16×5	28	38	1	5,5	48	43,5	10	10	40	2 000	12,7	15,2	**FLBU 16/PLBU 16**	**BUF 16**
16×10	28	38	1	5,5	48	47	37	10	40	2 000	12,6	15,2	**FLBU 16/PLBU 16**	**BUF 16**
20×5	36	47	1	6,6	58	44,5	10	10	44	3 700	16,7	19,4	**PLBU 20/FLBU 20**	**BUF 20**
25×5	40	51	1	6,6	62	44,5	10	10	48	4 700	21,7	24,6	**PLBU 25/FLBU 25**	**BUF 25**
25×10	40	51	1	6,6	62	75	10	10	48	4 700	20,5	24,6	**PLBU 25/FLBU 25**	**BUF 25**
32×5	50	65	1	9	80	51,5	10	12	62	5 700	28,7	31,6	**PLBU 32/FLBU 32**	**BUF 32**
32×10	50	65	1	9	80	64	10	12	62	5 700	27,8	32	**PLBU 32/FLBU 32**	**BUF 32**
40×5	63	78	2	9	93	58,5	10	14	70	5 700	36,7	39,6	**PLBU 40/FLBU 40**	**BUF 40**
40×10	63	78	2	9	93	91	20	14	70	5 700	34	39,4	**PLBU 40/FLBU 40/FLRBU 4**[2)]	**BUF 40**
50×10	75	93	2	11	110	93	10	16	85	5 700	44	49,7	**PLBU 50/FLBU 50/FLRBU 5**[2)]	**BUF 50**
63×10	90	108	2	11	125	95	10	18	95	5 700	57	62,8	**PLBU 63/FLBU 63**	**BUF 63**

[2)] For high load application, use FLRBU type. Please refer to roller screws catalogue for end shaft and support bearings definitions

PND preloaded screws, DIN standard 69051

Rolled thread ball screw with recirculation through inserts, DIN nut

Features

- Nominal diameter from 16 to 63 mm
- Lead from 5 to 10 mm
- Standard composite recirculation inserts
- Optional steel recirculation inserts
- Standard lead precision G5, G7 and G9
- Nut ground outside diameter / flange face
- Precision ground nut thread[1)]
- Standard preload 7% to 8,5% of ball screw Ca value, depending on ball screw size
- Lubrication hole for grease nipple or for automatic lubrication kit
- Optional surface coating on shaft and nut
- Optional safety nuts. Please contact Ewellix for selection and usage of this option
- Optional wipers.

Benefits

- Compact nut / integral flange for easy assembly
- One-piece nut1) with internal preload for compactness and optimum rigidity
- Design well suited for positioning screws. G5 lead precision of ground ball screws
- Optional steel recirculation inserts can act as a safety device for severe or vertical applications. Please contact Ewellix for such applications.

Standard

Assembly with pillow block

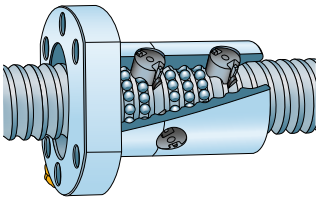

Recirculation

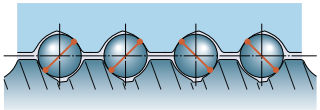

PND

Technical data

Nominal diameter	Lead (right hand)	Nut Basic load ratings dynamic	static	Number of circuits of balls	Preload torque average	Stiffness	Inertia	Grease	Weight	Screw Mass	Inertia	Grease	Designation
d_0 mm	P_h mm	C_a kN	C_{oa}	–	T_{pr} Nm	Rn N/µm	kgmm²	cm³	kg	kg/m	kgmm²/m	cm³/m	–
16	5	5,5	7,1	2×2	0,08	147	46	1	0,19	1,3	33	2,1	**PND 16×5 R**
	10	10,7	17,2	2×2×1,8	0,15	263	56	2,7	0,28	1,21	30,7	1,9	**PND 16×10 R**[1)]
20	5	8	11,9	2×2	0,14	248	91	1,3	0,26	2	85	2,7	**PND 20×5 R**
25	5	12,7	22,7	2×3	0,28	436	405	2	0,4	3,3	224	3,4	**PND 25×5 R**
	10	13,3	19,5	2×2	0,3	264	245	4,5	0,53	3,2	255	3,2	**PND 25×10 R**
32	5	19	41,3	2×4	0,52	734	453	3,2	0,715	5,6	641	3,2	**PND 32×5 R**
	10	21,9	39	2×3	0,61	490	490	7,6	0,81	5,6	639	4,1	**PND 32×10 R**
40	5	25,6	65,6	2×5	0,71	968	1 110	4,8	1,3	9	1 639	5,5	**PND 40×5 R**
	10	52,2	99,3	2×4	1,47	793	1 290	15,5	1,8	8,4	1 437	4,9	**PND 40×10 R**
50	10	71,3	157,3	2×5	2,47	1 222	2 940	27,5	2,6	13,6	3 736	7,9	**PND 50×10 R**
63	10	81,5	206,9	2×5	3,46	1 448	5 290	26,8	3,2	22	9 913	7,9	**PND 63×10 R**

[1)] Except 16×10 R: nut thread is not ground, double nut design

EWELLIX

Dimensional drawing

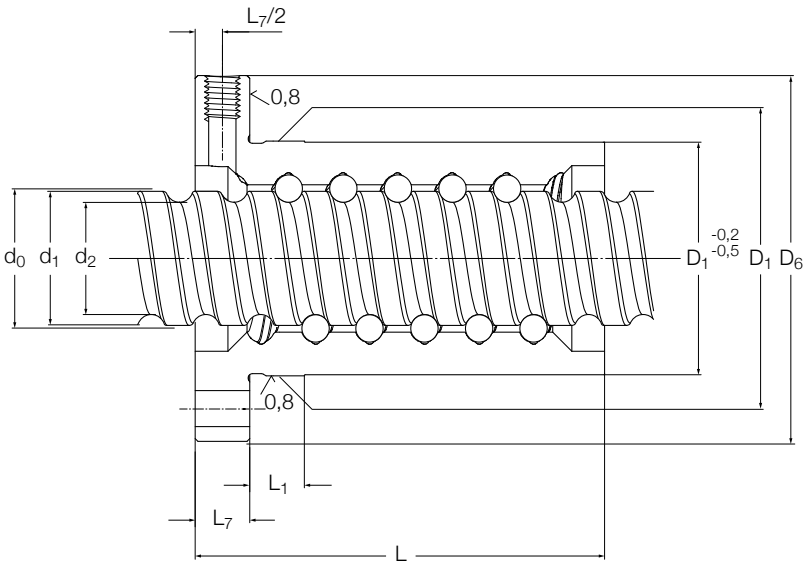

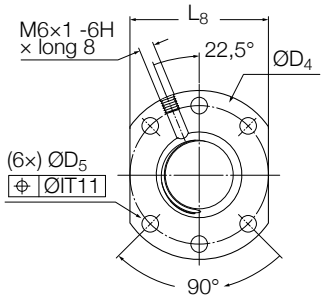

Design 1

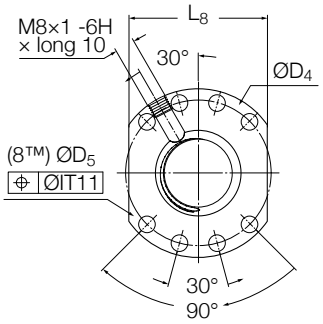

Design 2

Screw	Nut									Screw			Support bearings	
													Recommended thrust support bearings	Recommended support pillow block
d_0 x P_h	D_1 6g	D_4 js12	Design	D_5 H13	D_6 h13	L	L_1	L_7	L_8 h13	length max	d_2	d_1		
mm	mm									mm			–	
16×5	28	38	1	5,5	48	48	10	10	40	2 000	12,7	15,2	**FLBU 16/PLBU 16**	**BUF 16**
16×10	28	38	1	5,5	48	87	77	10	40	2 000	12,6	15,2	**FLBU 16/PLBU 16**	**BUF 16**
20×5	36	47	1	6,6	58	50	10	10	44	3 700	16,7	19,4	**PLBU 20/FLBU 20**	**BUF 20**
25×5	40	51	1	6,6	62	62	10	10	48	4 700	21,7	24,6	**PLBU 25/FLBU 25**	**BUF 25**
25×10	40	51	1	6,6	62	75	10	10	48	4 700	20,5	24,6	**PLBU 25/FLBU 25**	**BUF 25**
32×5	50	65	1	9	80	74	10	12	62	5 700	28,7	31,6	**PLBU 32/FLBU 32**	**BUF 32**
32×10	50	65	1	9	80	100	10	12	62	5 700	27,8	32	**PLBU 32/FLBU 32**	**BUF 32**
40×5	63	78	2	9	93	88	10	14	70	5 700	36,7	39,6	**PLBU 40/FLBU 40**	**BUF 40**
40×10	63	78	2	9	93	130	20	14	70	5 700	34	39,4	**PLBU 40/FLBU 40/FLRBU 4**[2)]	**BUF 40**
50×10	75	93	2	11	110	151	10	16	85	5 700	44	49,7	**PLBU 50/FLBU 50/FLRBU 5**[2)]	**BUF 50**
63×10	90	108	2	11	125	153	10	18	95	5 700	57	62,8	**PLBU 63/FLBU 63**	**BUF 63**

[2)] For high load application, use FLRBU type. Please refer to roller screws catalogue for end shaft and support bearings definitions

SN/BN precision screws

Rolled thread ball screw with recirculation through inserts, cylindrical flange

Features

- Nominal diameter from 16 to 63 mm
- Lead from 5 to 10 mm
- Standard composite recirculation inserts
- Optional steel recirculation inserts
- Standard lead precision G5, G7 and G9
- Nut ground outside diameter / flange face
- Precision ground nut thread
- Lubrication hole for grease nipple or for automatic lubrication kit
- Optional surface coating on shaft and nut
- Optional safety nuts. Please contact Ewellix for selection and usage of this option
- Optional wipers.

Benefits

- Economical compact nut / integral flange for easy assembly
- Design well suited for positioning screws. G5 lead precision of ground ball screws
- Optional steel recirculation inserts can act as a safety device for severe or vertical applications. Please contact Ewellix for such applications
- Backlash elimination by oversized balls on request (BN designation), over maximum length of 1 000mm.

Standard

Customised

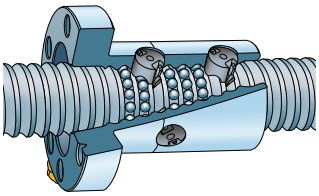

Recirculation

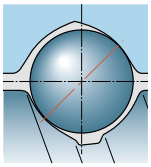

SN

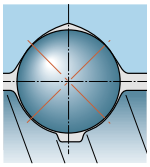

BN

Technical data

Nominal diameter	Lead (right hand)	Nut									Screw			Designation
		Basic load ratings dynamic	static	Number of circuits of balls	Std play	Reduced play on request	Preload torque zero play	Inertia	Grease	Weight	Mass	Inertia	Grease	
d_0	P_h	C_a	C_{oa}				T_{pr}							
mm	mm	kN		–	mm			kgmm²	cm³	kg	kg/m	kgmm²/m	cm³/m	–
16	5	7,8	10,7	3	0,08	0,05	0,05	45	0,9	0,18	1,3	33	2,1	**SN/BN 16×5 R**
20	5	11,3	17,9	3	0,1	0,05	0,08	88	1,2	0,24	2	85	2,7	**SN/BN 20×5 R**
25	5	12,7	22,7	3	0,1	0,05	0,11	127	1,6	0,28	3,3	224	3,4	**SN/BN 25×5 R**
	10	24,1	39	4	0,12	0,08	0,23	244	4,5	0,53	3,2	255	3,2	**SN/BN 25×10 R**
32	5	19	41,3	4	0,1	0,05	0,21	250	2,1	0,4	5,6	641	4,5	**SN/BN 32×5 R**
	10	21,9	39	3	0,12	0,08	0,25	673	4,6	0,83	5,6	639	4,2	**SN/BN 32×10 R**
40	5	25,6	65,6	5	0,1	0,05	0,25	495	3,1	0,58	9	1 639	5,6	**SN/BN 40×5 R**
	10	63,3	124,1	5	0,12	0,08	0,64	1 285	10,7	1,4	8,4	1437	5,1	**SN/BN 40×10 R**
50	10	71,3	157,3	5	0,12	0,08	0,88	1 305	13,1	1,8	13,6	3 736	6,5	**SN/BN 50×10 R**
63	10	81,5	206,9	5	0,12	0,08	1,23	4 180	16,1	2,25	22	9 913	8,4	**SN/BN 63×10 R**

Dimensional drawing

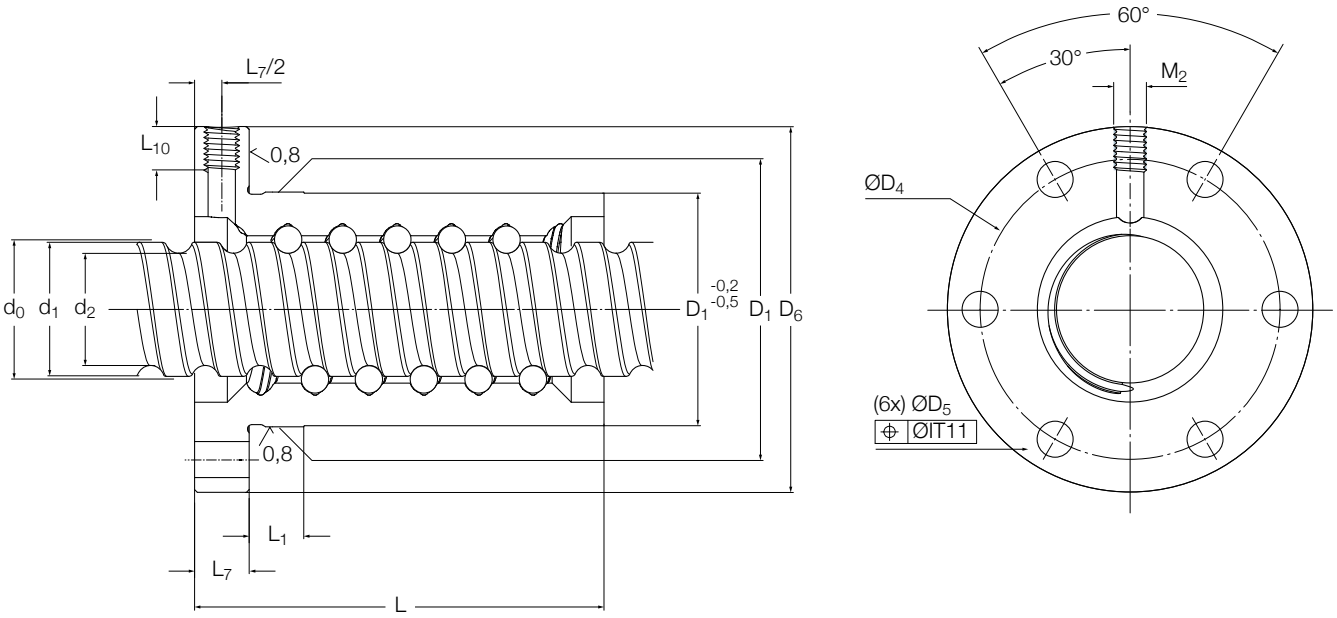

Screw	Nut									Screw			Support bearings	
													Recommended thrust support bearings	Recommended support pillow block
$d_0 \times P_h$ mm	D_1 6g mm	D_4	D_5 H13	D_6 h13	L	L_1	L_7	L_{10}	M_2 6H	length max mm	d_2	d_1	–	
16×5	28	38	6×5.5	48	43,5	10	10	8	M6	2 000	12,7	15,2	**FLBU 16 / PLBU 16**	**BUF 16**
20×5	33	45	6×6.6	57	44,5	10	10	8	M6	3 700	16,7	19,4	**PLBU 20 / FLBU 20**	**BUF 20**
25×5	38	50	6×6.6	62	44,5	10	10	8	M6	4 700	21,7	24,6	**PLBU 25 / FLBU 25**	**BUF 25**
25×10	43	55	6×6.6	67	75	10	10	8	M6	4 700	20,5	24,6	**PLBU 25 / FLBU 25**	**BUF 25**
32×5	45	58	6×6.6	70	51,5	10	12	8	M6	5 700	28,7	31,6	**PLBU 32 / FLBU 32**	**BUF 32**
32×10	54	70	6×9	87	64	10	12	10	M8×1	5 700	27,8	32	**PLBU 32 / FLBU 32**	**BUF 32**
40×5	53	68	6×6.6	80	58,5	10	14	8	M6	5 700	36,7	39,6	**PLBU 40 / FLBU 40**	**BUF 40**
40×10	63	78	6×9	95	91	20	14	10	M8×1	5 700	34	39,4	**PLBU 40 / FLBU 40 / FLRBU 4[1)]**	**BUF 40**
50×10	72	90	6×11	110	93	10	16	10	M8×1	5 700	44	49,7	**PLBU 50 / FLBU 50 / FLRBU 5[1)]**	**BUF 50**
63×10	85	105	6×11	125	95	10	18	10	M8×1	5 700	57	62,8	**PLBU 63 / FLBU 63**	**BUF 63**

[1)] For high load application, use FLRBU type. Please refer to roller screws catalogue for end shaft and support bearings definitions

PN preloaded screws

Rolled thread ball screw with recirculation through inserts, cylindrical flange

Features

- Nominal diameter from 16 to 63 mm
- Nominal diameter from 16 to 63 mm
- Lead from 5 to 10 mm
- Standard composite recirculation inserts
- Optional steel recirculation inserts
- Standard lead precision G5, G7 and G9
- Nut ground outside diameter / flange face
- Precision ground nut thread
- Standard preload 7% to 8,5% of ball screw Ca value, depending on ball screw size
- Lubrication hole for grease nipple or for automatic ubrication kit
- Optional surface coating on shaft and nut
- Optional safety nuts. Please contact Ewellix for selection and usage of this option
- Optional wipers.

Benefits

- Economical compact nut / integral flange for easy assembly
- One-piece nut with internal preload for compactness and optimum rigidity
- Design well suited for positioning screws. G5 lead precision of ground ball screws
- Optional steel recirculation inserts can act as a safety device for severe or vertical applications. Please contact Ewellix for such applications.Backlash elimination by oversized balls on request (BN designation), over maximum length of 1 000 mm.

Standard

Customised

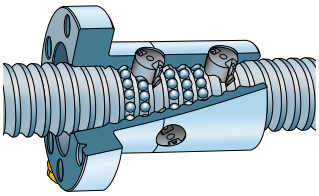

Recirculation

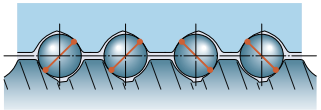

PN

Technical data

Nominal diameter	Lead (right hand)	Nut Basic load ratings dynamic	static	Number of circuits of balls	Preload torque zero play	Stiffness	Inertia	Grease	Weight	Screw Mass	Inertia	Grease	Designation
d_0	P_h	C_a	C_{oa}		T_{pr}	R_n							
mm	mm	kN		–		N/µm	kgmm²	cm³	kg	kg/m	kgmm²/m	cm³/m	–
16	5	5,5	7,1	2×2	0,08	147	46	1	0,19	1,3	33	2,1	**PN 16×5 R**
20	5	8	11,9	2×2	0,14	248	91	1,1	0,26	2	85	2,4	**PN 20×5 R**
25	5	17,7	22,7	2×3	0,28	436	400	2,1	0,39	3,3	224	3,4	**PN 25×5 R**
	10	13,3	19,5	2×2	0,3	264	245	4,1	0,53	3,2	255	2,8	**PN 25×10 R**
32	5	19	41,3	2×4	0,52	734	390	3,2	0,5	5,6	641	4,4	**PN 32×5 R**
	10	21,9	39	2×3	0,61	490	830	7,6	1,13	5,6	639	4,1	**PN 32×10 R**
40	5	25,6	65,6	2×5	0,71	968	585	4,8	0,74	9	1 639	5,5	**PN 40×5 R**
	10	52,2	99,3	2×4	1,47	793	1 530	14,6	1,8	8,4	1 437	4,9	**PN 40×10 R**
50	10	71,3	157,3	2×5	2,47	1 222	2 930	27,5	2,6	13,6	3 736	7,9	**PN 50×10 R**
63	10	81,5	206,9	2×5	3,46	1 448	5 980	26,8	3,2	22	9 913	7,9	**PN 63×10 R**

Dimensional drawing

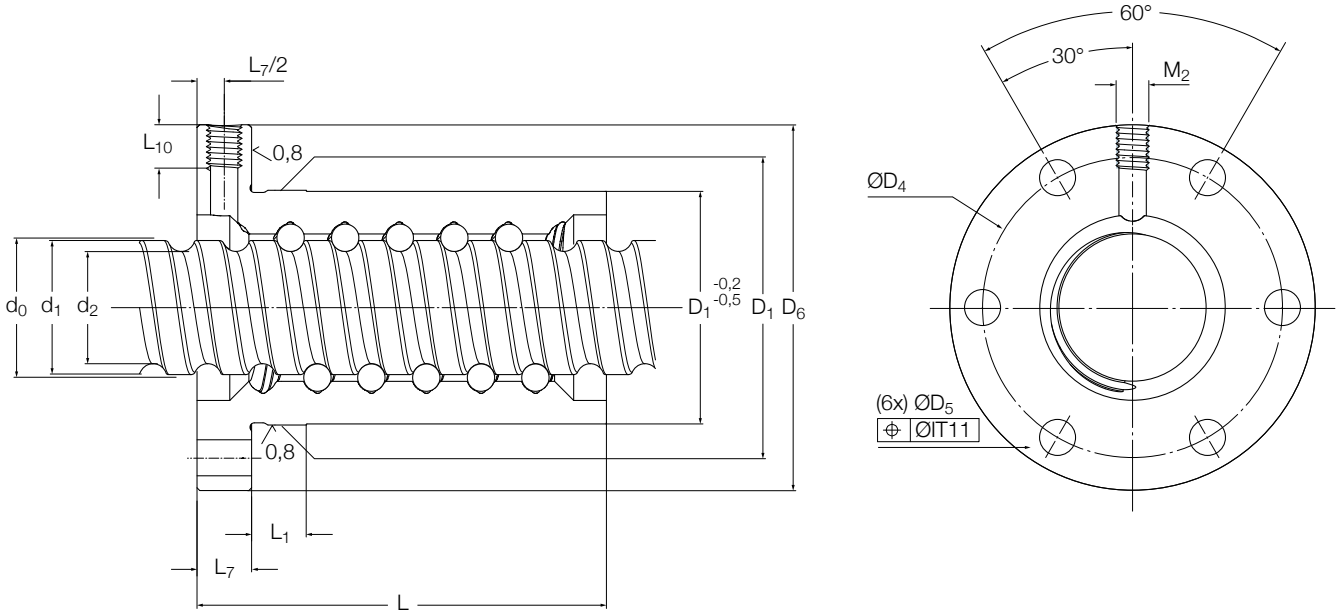

Screw	Nut									Screw			Support bearings	
													Recommended thrust support bearings	Recommended support pillow block
d_0 x P_h mm	D_1 6g mm	D_4	D_5 H13	D_6 h13	L	L_1	L_7	L_{10}	M_2 6H	length max mm	d_2	d_1	–	
16×5	28	38	6×5,5	48	48	10	10	8	M6	2 000	12,7	15,2	**FLBU 16/PLBU 16**	**BUF 16**
20×5	33	45	6×6,6	57	50	10	10	8	M6	3 700	16,7	19,4	**PLBU 20/FLBU 20**	**BUF 20**
25×5	38	50	6×6,6	62	62	10	10	8	M6	4 700	21,7	24,6	**PLBU 25/FLBU 25**	**BUF 25**
25×10	43	55	6×6,6	67	75	10	10	8	M6	4 700	20,5	24,6	**PLBU 25/FLBU 25**	**BUF 25**
32×5	45	58	6×6,6	70	74	10	12	8	M6	5 700	28,7	31,6	**PLBU 32/FLBU 32**	**BUF 32**
32×10	54	70	6×9	87	100	10	12	10	M8×1	5 700	27,8	32	**PLBU 32/FLBU 32**	**BUF 32**
40×5	53	68	6×6,6	80	88	10	14	8	M6	5 700	36,7	39,6	**PLBU 40/FLBU 40**	**BUF 40**
40×10	63	78	6×9	95	126	20	14	10	M8×1	5 700	34	39,4	**PLBU 40/FLBU 40/FLRBU 4**[1]	**BUF 40**
50×10	72	90	6×11	110	151	10	16	10	M8×1	5 700	44	49,7	**PLBU 50/FLBU 50/FLRBU 5**[1]	**BUF 50**
63×10	85	105	6×11	125	153	10	18	10	M8×1	5 700	57	62,8	**PLBU 63/FLBU 63**	**BUF 63**

[1] For high load application, use FLRBU type. Please refer to roller screws catalogue for end shaft and support bearings definitions

SL/TL long lead screws

Rolled thread ball screw for high linear speed

Features

- Nominal diameter from 25 to 50 mm
- Lead from 20 to 50 mm
- Lubrication hole for grease nipple or for automatic lubrication kit
- Standard protection at each end of the nut with composite wipers integrated into recirculation caps (NOWPR)
- Optional double protection at each end of the nut with additional brush wipers fitted into recirculation caps (WPR)
- Optional surface coating on shaft and nut
- Optional safety nuts. Please contact Ewellix for selection and usage of this option.

Benefits

- High rotational speed up to nd0 = 90 000, resulting in high linear speed up to 110 m/min
- Nut design well suited for transport and positioning screw applications requiring high velocity such as woodworking, some functions in plastic injection presses, pick–&–place, etc.
- Backlash elimination (TL designation).

Standard

Customised

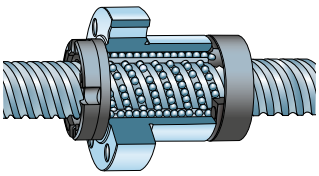

Recirculation

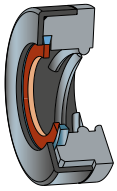

Optional double protection

Technical data

Nominal diameter	Lead (right hand)	Nut: SL (with play) Basic load ratings dynamic	Nut: SL (with play) Basic load ratings static	Nut: Std play	Nut: TL (with backlash elimination) Basic load ratings dynamic	Nut: TL (with backlash elimination) Basic load ratings static	Nut: TL (with backlash elimination) Preload torque zero play	Number of circuits of balls	Inertia	Grease	Weight	Screw: Mass	Screw: Inertia	Screw: Grease	Designation
d_0	P_h	C_a	C_{oa}		C_a	C_{oa}	T_{pr}								
mm	mm	kN		mm	–			–	kgmm²	cm³	kg	kg/m	kgmm²/m	cm³/m	–
25	20	22,8	51,5	0,08	12,6	25,8	0,04-0,36	4×1,7	480	3	0,57	3,3	215	3,4	**SL/TL 25×20 R**
	25	22,3	50,6	0,08	12,3	25,3	0,04-0,36	4×1,7	400	3,6	0,66	3,2	210	3,3	**SL/TL 25×25 R**
32	20	25,4	65,2	0,08	14	32,6	0,05-0,45	4×1,7	550	3,4	0,7	5,1	530	4,4	**SL/TL 32×20 R**
	32	26,1	69,3	0,08	14,4	34,7	0,05-0,50	4×1,8	450	4,5	0,7	5,4	600	4,3	**SL/TL 32×32 R**
	32	26,1	69,3	0,08	14,4	34,7	0,05-0,50	4×1,8	450	4,5	0,7	5,4	600	4,3	**SLD/TLD 32×32 R**
	40	12,6	29,8	0,08	6,9	14,9	0,05-0,50	4×0,8	515	3	0,65	4,9	490	4,4	**SL/TL 32×40 R**
40	20	41,3	128,8	0,08	22,8	64,4	0,05-0,55	4×2,7	1 420	6,6	1,2	8,2	1 380	5,5	**SL/TL 40×20 R**
	40	51,7	130,5	0,1	28,5	65,3	0,05-0,55	4×1,7	3 300	12,5	2,4	8,1	1 330	5,2	**SL/TL 40×40 R**
50	50	92,9	235,1	0,12	51,2	117,6	0,1-0,9	4×1,7	6 060	19,4	3,3	13,2	3 560	6,4	**SL/TL 50×50 R**

Dimensional drawing

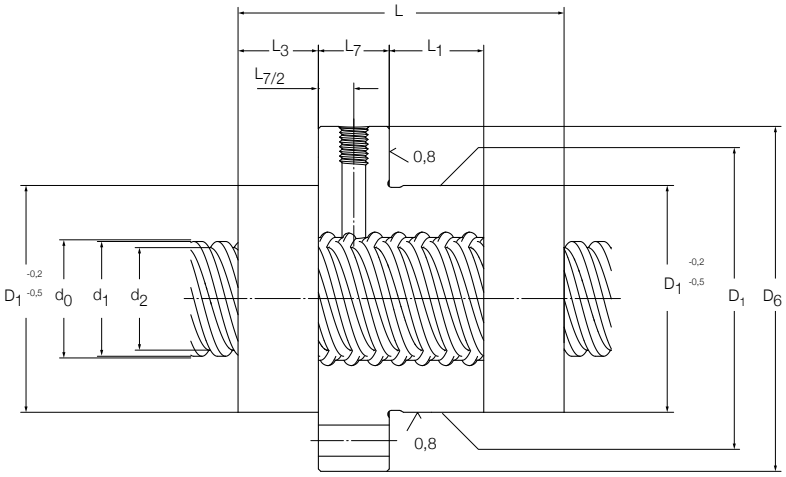

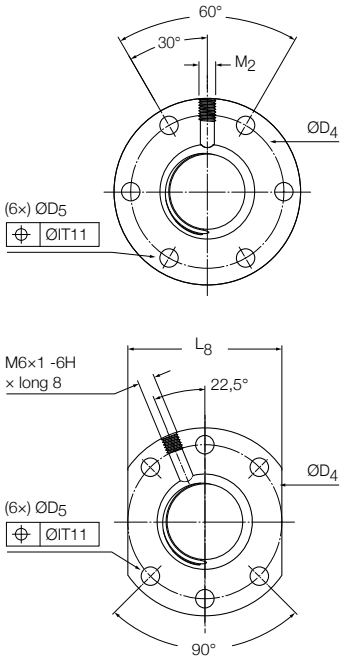

Screw	Nut												Screw			Support bearings	
																Recommended thrust support bearings	Recommended support pillow block
d_0 x P_h mm	D_1 g9 mm	D_4 js12	Design –	D_5 H13 mm	D_6	L	L_1	L_3	L_7	L_8 h13	L_{10}	M_2	length max mm	d_2	d_1	–	
25×20	48	60	1	6×6,6	73	66,8	18	17,6	15	N / A	8	M6	4 700	21,7	24,3	**PLBU 25/FLBU 25**	**BUF 25**
25×25	48	60	1	6×6,6	73	78,2	27	18,7	15	N / A	8	M6	4 700	21,5	24,4	**PLBU 25/FLBU 25**	**BUF 25**
32×20	56	68	1	6×6,6	80	67,4	18	17,9	15	N / A	8	M6	5 700	27,5	30	**PLBU 32/FLBU 32/FLRBU3**[1]	**BUF 32**
32×32	56	68	1	6×6,6	80	80,3	41	13	15	N / A	8	M6	5 700	28,4	31,1	**PLBU 32/FLBU 32/FLRBU3**[1]	**BUF 32**
32×32	50 g6	65	2	6×9	80	80,3	41	13	15	62	8	M6	5 700	28,4	31,1	**PLBU 32/FLBU 32/FLRBU3**[1]	**BUF 32**
32×40	53 g6	68	1	6×6,6	80	54,8	17	12,2	15	N / A	8	M6	5 700	26,9	29,6	**PLBU 32/FLBU 32**	**BUF 32**
40×20	63	78	1	6×9	95	87,3	38	18	15	N / A	8	M6	5 700	35,2	37,7	**PLBU 40/FLBU 40**	**BUF 40**
40×40	72	90	1	6×11	110	110,8	44	21,6	25	N / A	10	M8×1	5 700	34,2	38,3	**PLBU 40/FLBU 40/FLRBU 4**[1]	**BUF 40**
50×50	85	105	1	6×11	125	134	60	25,5	25	N / A	10	M8×1	5 700	43,5	49,1	**PLBU 50/FLBU 50/FLRBU 5**[1]	**BUF 50**

[1] For high load application, use FLRBU type. Please refer to roller screws catalogue for end shaft and support bearings definitions

SLT/TLT rotating nut

Long lead rolled ball screw with rotating nut

Concept

The main purpose of this solution is to minimize the inertia phenomenon associated with long rotating shafts.

The long lead screw shaft is rigidly fixed to the machine frame. The ball nut, rotating inside a bearing housing and driven via a tension belt, moves along the screw shaft.

The customers are responsible for the sourcing and assembly of the electric motor, belt, pulleys and frame holding the bearing housing.

Features

- Nominal diameter from 25 to 50 mm
- Lead from 20 to 50 mm
- 72 series angular contact bearings are directly mounted on the nut outer diameter
- Bearings are preloaded in back-to-back arrangement in order to fully support the moment created by the belt tension
- 2 Nilos rings protect the bearings against pollution and permit lubrication for life
- Brush wipers are mounted at each end of the nut in the standard configuration for better protection against contamination
- The ball screw assembly is lubricated through a nipple mounted on the housing external diameter in the standard version
- Standard grease is Ewellix LGMT2. Other lubricants are available on request.

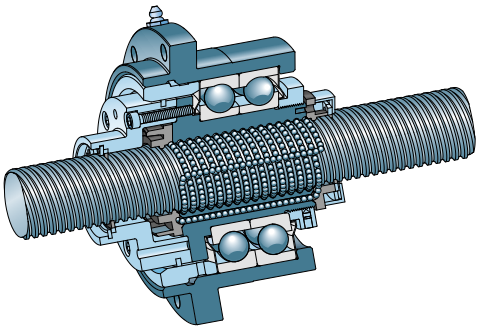

Technical data

Nominal diameter	Lead (right hand)	Ball screw capacities SL Basic load ratings		TL Basic load ratings		Bearing Basic load ratings		Rotating nut Max transmissible torque	Max transmissible axial load	Inertia with pulley support	Mass	Designation
d_0 mm	P_h mm	C_a kN	C_{oa}	C_a	C_{oa}	C_a kN	C_{oa}	Nm	kN	kgmm²	kg	–
25	20	39,2	97,0	21,6	48,5	61,8	56	180	68,3	1 012	4,5	**SLT/TLT 25×20 R**
	25	33,2	80,4	18,3	40,2	61,8	56	180	68,3	1 023	4,6	**SLT/TLT 25×25 R**
32	20	49,6	141,8	27,3	70,9	78	76,5	209	107	1 935	7,2	**SLT/TLT 32×20 R**
	32	32,2	88,6	17,7	44,3	78	76,5	209	87,3	1 919	7,1	**SLT/TLT 32×32 R**
	40	25,3	67,0	13,9	33,5	78	76,5	209	81,7	1 949	7,1	**SLT/TLT 32×40 R**
40	20	54,2	176,5	29,8	88,3	93,6	91,5	240	116	3 095	7,5	**SLT/TLT 40×20 R**
	40	51,7	130,5	28,5	65,3	114	118	246	93,3	3 784	8,4	**SLT/TLT 40×40 R**
50	50	92,9	235,1	51,2	117,6	156	166	803	162	1 1482	15,5	**SLT/TLT 50×50 R**

EWELLIX

Benefits

- High rotational speed up to nd0 = 90 000, resulting in high linear speed up to 110 m/min
- Compact, easy and simple solution to incorporate into application
- Fixed screw shaft for simplified mounting into application
- Inertia is considerably reduced, for example: 3 800 kgmm² instead of 6 000 kgmm² for a screw shaft 40x40 with 4,5 m stroke
- Lower motor power requirements resulting from lower system inertia
- Backlash elimination (TLT designation).

Screw	Dimension									
d_0 x P_h mm	L	L_1	L_2	L_3	L_4	L_5	L_6	L_7	L_8	L_9
25x20	121,2	15	12,4	19,9	74	2,9	16,9	12,4	15	15
25x25	126,3	15	12,4	19,9	74	2,9	22	12,4	15	15
32x20	132,9	20	3,8	27,5	89	2,2	17,9	20	15	20
32x32	126,8	20	3,8	27,5	89	2,2	11,8	20	15	20
32x40	125,9	20	3,8	27,5	89	2,2	10,9	20	15	20
40x20	136,7	20	9,3	22,5	85	4,7	17,7	15	15	20
40x40	159,6	47	8,8	19	83	0	20,8	11,5	15	20
50x50	163,5	20	15,5	25,4	100	4,5	23,5	15,7	20	25

Dimensional drawing

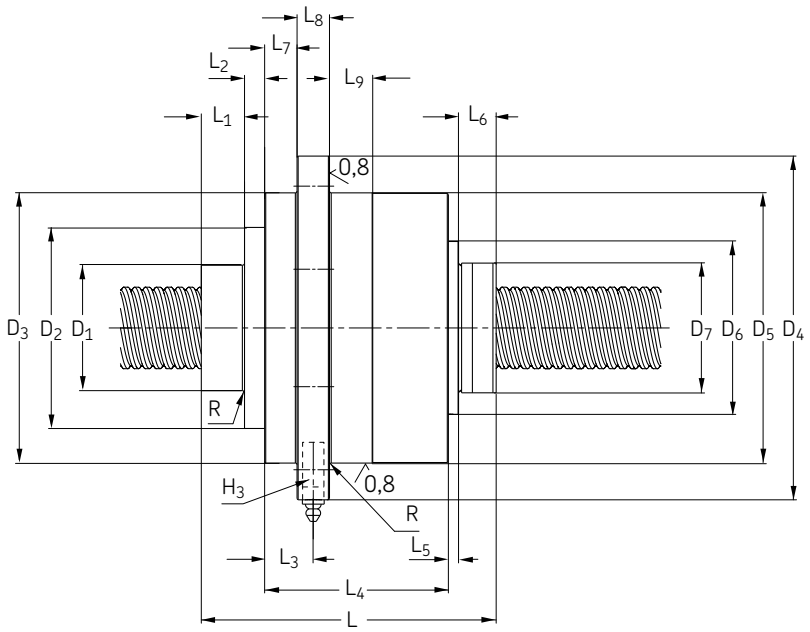

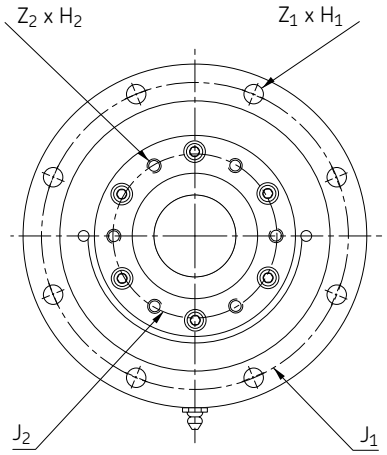

Screw	Dimension												
d_0 x P_h mm	D_1 h8	D_2	D_3	D_4	D_5 g6	D_6	D_7	R max.	J_1	J_2	Z_1 x H_1	Z_2 x H_2 x useful depth	H_3
25×20	40	72,5	100	133	100	65	48	0,8	116	55	6×Ø9	6×M6×20	**M6 1**
25×25	40	72,5	100	133	100	65	48	0,8	116	55	6×Ø9	6×M6×20	**M6×1**
32×20	50	82	119,5	150	120	76	56	0,8	135	68	6×Ø9	6×M6×20	**M6×1**
32×32	50	82	119,5	150	120	76	50	0,8	135	68	6×Ø9	6×M6×20	**M6×1**
32×40	50	82	119,5	150	120	76	53	0,8	135	68	6×Ø9	6×M6×20	**M6×1**
40×20	58	93	125	159	125	80	63	0,8	142	75	8×Ø9	6×M6×20	**M8×1**
40×40	60	93	137	168	137	N/A	72	1,6	153	80	8×Ø9	6×M6×20	**M8×1**
50×50	70	120	170	210	170	110	85	1,6	190	106	8×Ø11	6×M8×30	**M8×1**

All tolerances js13 if not specified.

Shaft end combinations

- In the ordering code, shaft ends machining is defined by:
  - One letter for nominal diameter
  - d_0 < 16 mm
  - Two letters for nominal diameter
  - d_0 ≥ 16 mm,
    detailing the combination of two machined ends
    (**Ordering key ↳ page 60**)
- Machined ends are detailed for nominal diameter < 16 mm (**↳ page 45**)
- Machined ends are detailed for nominal diameter ≥ 16 mm (**↳ page 46**).

Diameter < 16 mm		**Diameter ≥ 16 mm**	
Order code	Two machined ends	Order code	Two machined ends
A (without length indication)	cut only	AA (without length indication)	cut only
A (+ length)	cut + annealed		
B	1 + 2	BA	1A + 2A
F [1]	2 + 2	FA [1]	2A + 2A
G [1]	2 + 3	GA [1]	2A + 3A
H	2 + 4	HA	2A + 4A
J	2 + 5	JA	2A + 5A
M	3 + 5	MA	3A + 5A
S*) (+ length)	end machined to root diameter d_2, any length	SA*) (+ length) UA*) (+ length)	end machined to root diameter d_2, any length diameter d3 under induction hardening, any length
K	keyway	K	keyway
Z	end machined according to customer drawing on request	Z	end machined according to customer drawing on request

[1] Attention! This mounting requires the greatest care. Please contact Ewellix.

S, SA and UA end machining types

*) S and SA: end is machined to thread root diameter d_2. It is available for all screw shaft nominal diameters (**↳ fig. 10**)

*) UA: end is machined to diameter d_3 under induction hardened layer. Any length can be used. UA end machining is available for ball screws with nominal diameter d0 starting from 16 mm (**↳ fig. 10**).

Fig. 10

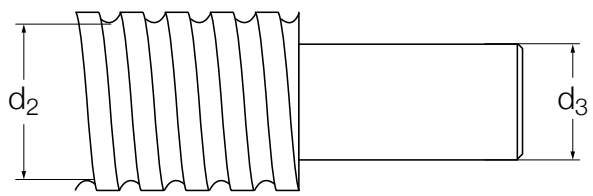

Dimensions mm	d_2	d_3
6×2	4,7	
8×2,5	6,3	
10×2	8,3	
10×3	7,8	
10×4	7,4	
12×2	9,9	
12×4	9,4	
12×5	9,3	
12,7×12,7	10,2	
14×4	11,9	
16×2	14,3	12
16×5	12,7	9
16×10	12,6	9
20×5	16,7	14
25×5	21,7	19
25×10	20,5	18
25×20	21,7	19
25×25	21,5	18
32×5	28,7	26
32×10	27,8	25
32×20	27,4	24
32×32	28,4	26
32×40	26,9	24
40×5	36,7	34
40×10	34,0	31
40×20	35,1	32
40×40	34,2	31
50×10	44,0	41
50×50	43,4	40
63×10	57,0	54

Standard machine ends

Standard end machining for nominal diameter < 16 mm

For SD/BD/SH–SDS/BDS/SHS

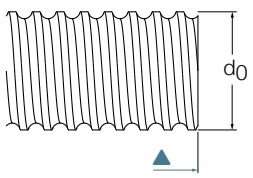

Type 1

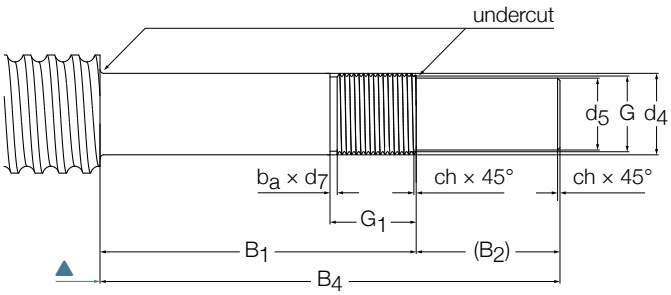

Type 2

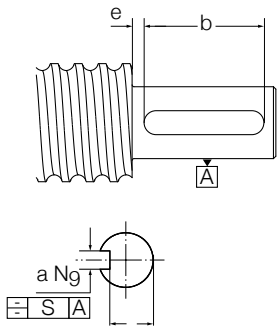

Keyway on request

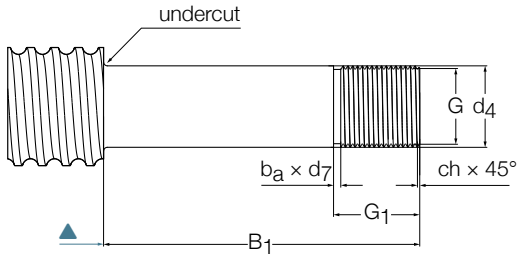

Type 3

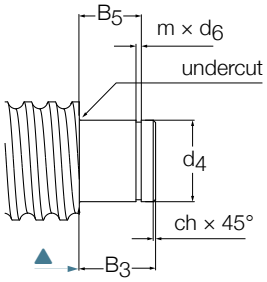

Type 4

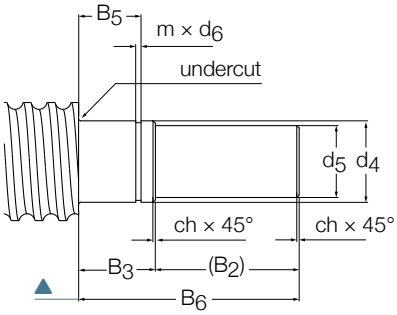

Type 5

Size d_0 mm	d_5 h7	d_4[1] js7	B_1 js12	B_2	B_3 js12	B_4 js12	B_5 H11	B_6 js12	G 6g	G_1	m +0,14 0	d_6 h11/ h12	ch	b_a	d_7 h11	a N9	b +0,5 0	e	j	S	**Keyway DIN 6885**
6	3	4	22	10	7	32	5,4	17	M4×0,7	7	0,5	3,8	0,5	1,2	2,9	–	–	–	–	–	–
8	4	5	24	12	7	36	5,6	19	M5×0,8	7,2	0,7	4,8	0,5	1,2	3,7	–	–	–	–	–	–
10	5	6	26	12	9	38	6,7	21	M6×1	7,5	0,8	5,7	0,5	1,5	4,5	–	–	–	–	–	–
12/12,7	6	8	38	12	10	50	7,8	22	M8×1	12,5	0,9	7,6	0,5	1,5	6,5	2	8	3	4,8	0,1	A2×2×8
14	8	10	40	16	12	56	9	28	M10×1,5	13,3	1,1	9,6	0,5	2,3	7,8	2	10	3	6,8	0,1	A2×2×10

▲ End of threaded screw length

[1] For applications with radial loads on support bearings, please consult Ewellix for best selection of tolerance on diameter d_4

Standard end machining for shaft nominal diameter ≥ 16 mm

For SD/BD–SDS/BDS–SX/BX–SND/BND/PND–SN/BN/PN

Standard shaft ends for ball screws with nominal diameter d_0 ≥ 16 mm have been developed to fit with the Ewellix support bearings FLBU, PLBU and BUF.

Support bearing	Machined end type
FLBU	2A or 3A
PLBU	2A or 3A
BUF	4A or 5A

For these types of machined ends, the maximum permissible dynamic load is 75% of the ball screw dynamic load carrying capacity.

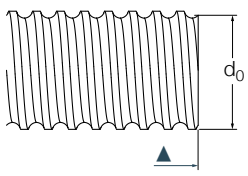

Type 1A

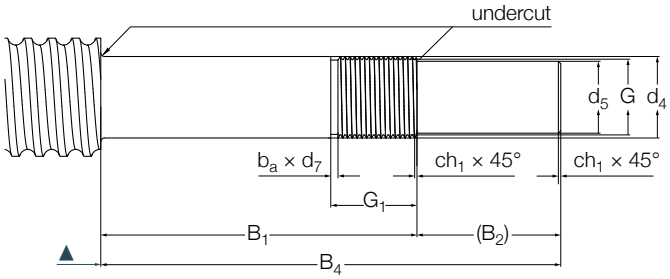

Type 2A

Technical data

Size d_0 – mm	d_5 h7	d_4[1] h6	d_{11} h6	d_{12} h7	B_1 js12	B_2	B_3 js12	B_4 js12	B_5 H11	B_6 js12	B_7	d_8
16	8	10	10	8	53	16	13	69	10	29	2	12,5
20	10	12	10	8	58	17	13	75	10	29	2	14,5
25[1]	15	17	17	15	66	30	16	96	13	46	4,5	20
32[1]	17	20	17	15	69	30	16	99	13	46	4,5	28,7
40[1]	25	30	30	25	76	45	22	121	17,5	67	4,5	33,5
50[1]	30	35	30	25	84	55	22	139	17,5	67	4,5	35,2
63	40	50	45	40	114	65	28	179	20,75	93	3	54

[1] For applications with radial loads on support bearings, please consult Ewellix for best selection of tolerance on diameter d_4

Dimensional drawing

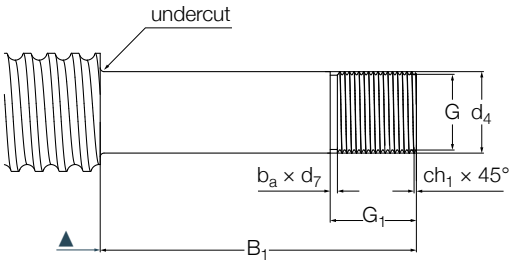

Type 3A

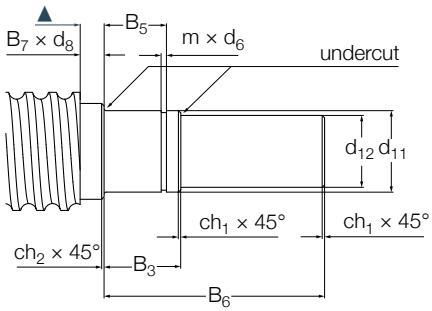

Type 5A

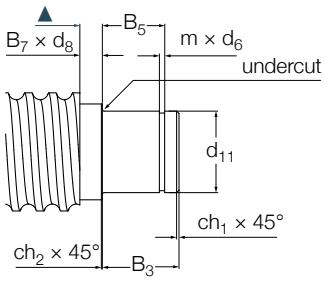

Type 4A

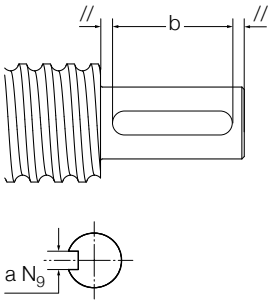

Keyway on request

Size										Keyway to DIN 6885 $a^{N9} \times l \times b$	
d_0	G 6g	G_1	m +0,14 0	d_6 h11	h12	ch_1	ch_2	b_a	d_7 h11	fixed end (type 2A)	fixed end (type 5A)
mm											
16	M10×0,75	17	1,1	9,6		0,5	0,5	1,2	8,8	A2×2×12	A2×2×12
20	M12×1	18	1,1	9,6		0,5	0,5	1,5	10,5	A3×3×12	A2×2×12
25	M17×1	22	1,1	16,2		0,5	0,5	1,5	15,5	A5×5×25	A5×5×25
32	M20×1	22	1,1	16,2		0,5	0,5	1,5	18,5	A5×5×25	A5×5×25
40	M30×1,5	25	1,6		28,6	1	0,5	2,3	27,8	A8×7×40	A8×7×40
50	M35×1,5	27	1,6		28,6	1	0,5	2,3	32,8	A8×7×45	A8×7×40
63	M50×1,5	32	1,85		42,5	1,5	1	2,3	47,8	A12×8×50	A12×8×50

▲ End of threaded screw length

Standard end machining for SL/TL only

Standard shaft ends for SL/TL ball screws have been developed to fit with the Ewellix support bearings FLBU, PLBU and BUF.

For the SL/TL long lead screw, an additional centering diameter, part of the threaded length, will be machined at both ends of the screw shaft to facilitate the nut assembly.

Support bearing	Machined end type
FLBU	2A or 3A
PLBU	2A or 3A
BUF	4A or 5A

For these types of machined ends, the maximum permissible dynamic load is 75% of the ball screw dynamic load carrying capacity, except for size 50×50 for which the dynamic load must not exceed 40 kN.

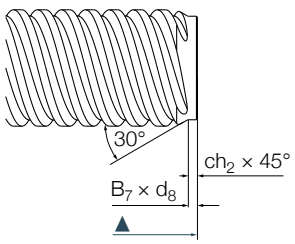

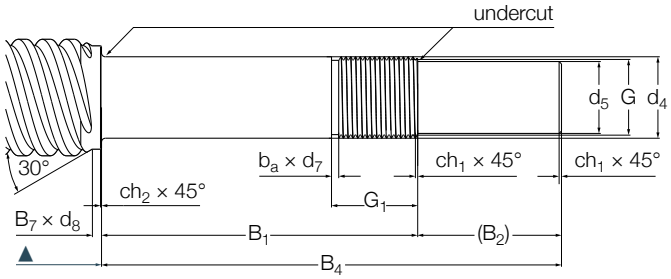

Type 2A

Technical data

Size														
d_0 –	d_5 h7	d_4 [1] h6	d_{10}	d_{11} h6	d_{12} h7	B_1 js12	B_2	B_3 js12	B_4 js12	B_5 H11	B_6 js12	B_7	B_9	d_8
mm														
25×20	15	17	–	17	15	66	30	16	96	13	46	4,5	0	21,6
25×25	15	17	–	17	15	66	30	16	96	13	46	4,5	0	21,4
32×20	17	20	21,5	17	15	69	30	16	99	13	46	4,5	2	27,3
32×32	17	20	21,5	17	15	69	30	16	99	13	46	4,5	2	28,3
32×40	17	20	21,5	17	15	69	30	16	99	13	46	4,5	2	26,8
40×20	25	30	–	30	25	76	45	22	121	17,5	67	6,5	0	35,1
40×40	25	30	–	30	25	76	45	22	121	17,5	67	6,5	0	34,1
50×50	30	35	37	30	25	84	55	22	139	17,5	67	9	3	43,3

[1] For applications with radial loads on support bearings, please consult Ewellix for best selection of tolerance on diameter d_4

Dimensional drawing

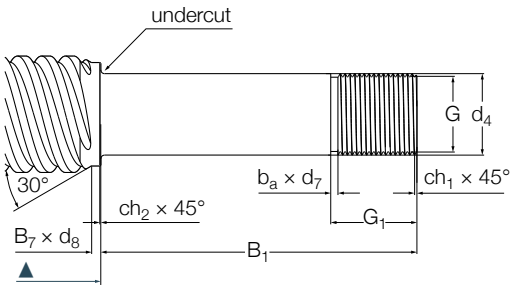

Type 3A

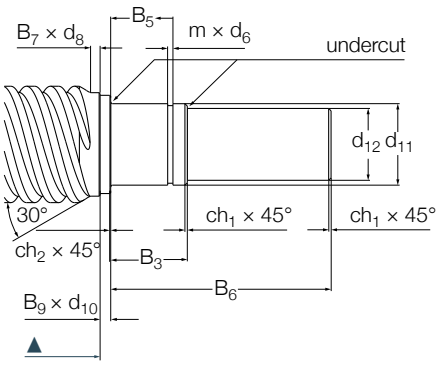

Type 5A

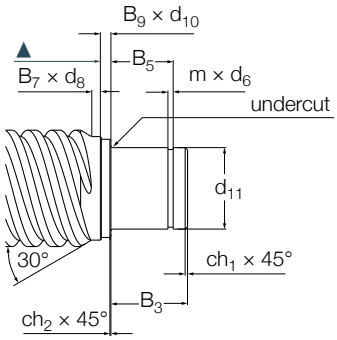

Type 4A

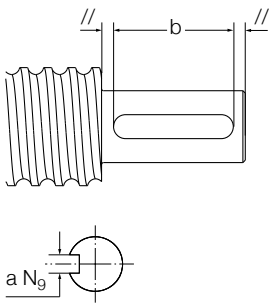

Keyway on request

Size										Keyway to DIN 6885	
										$a^{N9} \times l \times b$	
d_0	G	G_1	m	d_6		ch_1	ch_2	b_a	d_7	fixed end	fixed end
	6g		+0,14	h11	h12				h11	(type 2A)	(type 5A)
mm			0								
25×20	M17×1	22	1,1	16,2	–	0,5	0,5	1,5	15,5	A5×5×25	A5×5×25
25×25	M17×1	22	1,1	16,2	–	0,5	0,5	1,5	15,5	A5×5×25	A5×5×25
32×20	M20×1	22	1,1	16,2	–	0,5	0,5	1,5	18,5	A5×5×25	A5×5×25
32×32	M20×1	22	1,1	16,2	–	0,5	0,5	1,5	18,5	A5×5×25	A5×5×25
32×40	M20×1	22	1,1	16,2	–	0,5	0,5	1,5	18,5	A5×5×25	A5×5×25
40×20	M30×1,5	25	1,6	–	28,6	1	0,5	2,3	27,8	A8×7×40	A8×7×40
40×40	M30×1,5	25	1,6	–	28,6	1	0,5	2,3	27,8	A8×7×40	A8×7×40
50×50	M35×1,5	27	1,6	–	28,6	1	0,5	2,3	32,8	A8×7×45	A8×7×40

▲ End of threaded screw length

FLBU ball screw support bearings

Axially locating flanged housings fitted with SKF angular contact ball bearings

Features

- Precision machined housing made of burnished steel
- Two SKF preloaded angular contact ball bearings, 72 or 73 series, in back-to-back arrangement
- Two garter seals
- Standard self-locking Nylstop nut or high precision KMT nut upon request.

Benefits

- Complete support bearing ready to use, simplified application design, easy ordering process
- Quick assembly onto shaft end
- Elimination of most technical risks with bearings and seals assembly
- Support bearing dimensions and load carrying capacity matched to the ball screw characteristics
- Bearings back-to-back assembly with preload for stiff and accurate ball screw positioning
- Greased for life / maintenance-free.

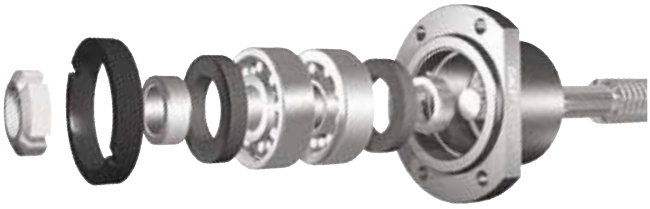

Technical data

Nominal diameter	Angular contact ball bearing (40°)				Lock nut							Flanged support bearing designation
	Basic load rating (axial)		Axial stiffness	SKF bearing designation	Self-locking nut		High precision nut[3]		Tightening torque	Grub screws		
	dynamic	static			Designation	Hook spanner	Designation	Hook spanner		size	tightening torque max.	
d_0	C_a	C_{oa}										
mm	kN		N/µm	–	–		–		Nm	–	Nm	–
16	12,2	12,8	play	7200 BECB[1]	CN 70-10	HN 1	KMT 0	HN 2/3	4	M5	4,5	**FLBU 16**
20	13,3	14,7	125	7201 BEGA[2]	CN 70-12	HN 1	KMT 1	HN 3	8	M5	4,5	**FLBU 20**
25	27,9	31,9	150	7303 BEGA[2]	CN 70-17	HN3	KMT 3	HN 4	15	M6	8	**FLBU 25**
32	24,6	31,9	176	7204 BEGA[2]	CN 70-20	HN 4	KMT 4	HN 5	18	M6	8	**FLBU 32**
40	41,9	59,6	222	7206 BEGA[2]	CN 70-30	HN 6	KMT 6	HN 6	32	M6	8	**FLBU 40**
50	54,5	79,8	250	7207 BEGA[2]	CN 70-35	HN 7	KMT 7	HN 7	40	M6	8	**FLBU 50**
63	128	196,1	353	7310 BEGA[2]	CN 70-50	HN 10	KMT 10	HN 10/11	60	M8	18	**FLBU 63**

[1] No backlash elimination
[2] Light preload
[3] Optional

Dimensional drawing

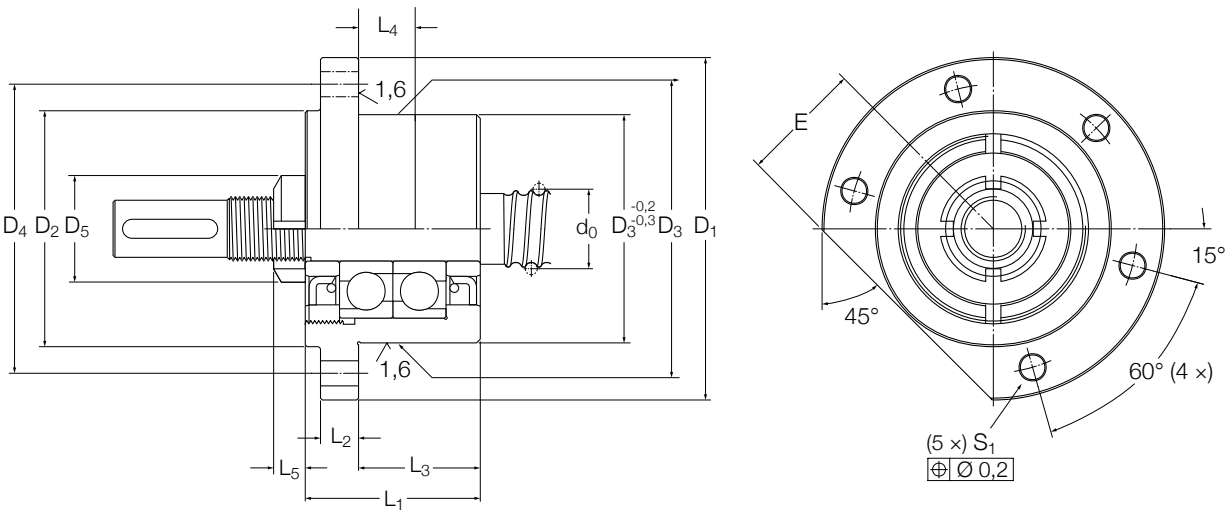

Screw	Support bearing				Self-locking nut		High precision nut[4]								Fixing screws
d_0	L_1	L_2	L_3	L_4	L_5	D_5	L_5	D_5	D_1	D_2	D_3 h7	D_4	S_1 H13	E	
mm	mm														–
16	37	10	22	12	7	18	14	28	76	50	47	63	6,6	26	M6×30
20	42	10	25	12	7,5	21	14	30	76	50	47	63	6,6	27	M6×30
25	46	10	32	18	8,3	28	18	37	90	62	60	76	6,6	32	M6×30
32	49	13	32	18	8,3	32	18	40	90	59	60	74	9	32	M8×40
40	53	16	32	18	11	44	20	49	120	80	80	100	11	44	M10×45
50	59	20	32	18	11	50	22	54	130	89	90	110	13	49	M12×60
63	85	25	43,5	22	11,7	68	25	75	165	124	124	146	13	64	M12×60

[4] Optional

PLBU ball screw support bearings

Fixed pillow blocks fitted with SKF angular contact ball bearings

Features

- Precision machined housing made of burnished steel
- Precision machined side faces of the housing can be used as reference assembly surfaces for screw alignment
- Two SKF preloaded angular contact ball bearings, 72 or 73 series, in back-to-back arrangement
- Two garter seals
- Standard self-locking Nylstop nut or high precision KMT nut upon request.

Benefits

- Complete support bearing ready to use, simplified application design, easy ordering process
- Quick assembly onto shaft end
- Elimination of most technical risks with bearings and seals assembly
- Support bearing dimensions and load carrying capacity matched to the ball screw characteristics
- Bearings back-to-back assembly with preload for stiff and accurate ball screw positioning
- Good rigidity provided by the base mounting with dowel pins
- Greased for life / maintenance-free.

Technical data

Nominal diameter	Angular contact ball bearing (40°)				Lock nut							Pillow block designation
	Basic load rating (axial)		Axial	SKF bearing	Self-locking nut		High precision nut[3]					
	dynamic	static	stiffness	designation	Designation	Hook spanner	Designation	Hook spanner	Tightening torque	Grub screws size	Grub screws tightening torque max.	
d_0	C_a	C_{oa}										
mm	kN		N/µm	–	–		–		Nm	–	Nm	–
16	12,2	12,8	play	7200 BECB[1]	CN 70-10	HN 1	KMT 0	HN 2/3	4	M5	4,5	PLBU 16
20	13,3	14,7	125	7201 BEGA[2]	CN 70-12	HN 1	KMT 1	HN 3	8	M5	4,5	PLBU 20
25	27,9	31,9	150	7303 BEGA[2]	CN 70-17	HN3	KMT 3	HN 4	15	M6	8	PLBU 25
32	24,6	31,9	176	7204 BEGA[2]	CN 70-20	HN 4	KMT 4	HN 5	18	M6	8	PLBU 32
40	41,9	59,6	222	7206 BEGA[2]	CN 70-30	HN 6	KMT 6	HN 6	32	M6	8	PLBU 40
50	54,5	79,8	250	7207 BEGA[2]	CN 70-35	HN 7	KMT 7	HN 7	40	M6	8	PLBU 50
63	128	196,1	353	7310 BEGA[2]	CN 70-50	HN 10	KMT 10	HN 10/11	60	M8	18	PLBU 63

[1] No backlash elimination
[2] Light preload
[3] Optional

Dimensional drawing

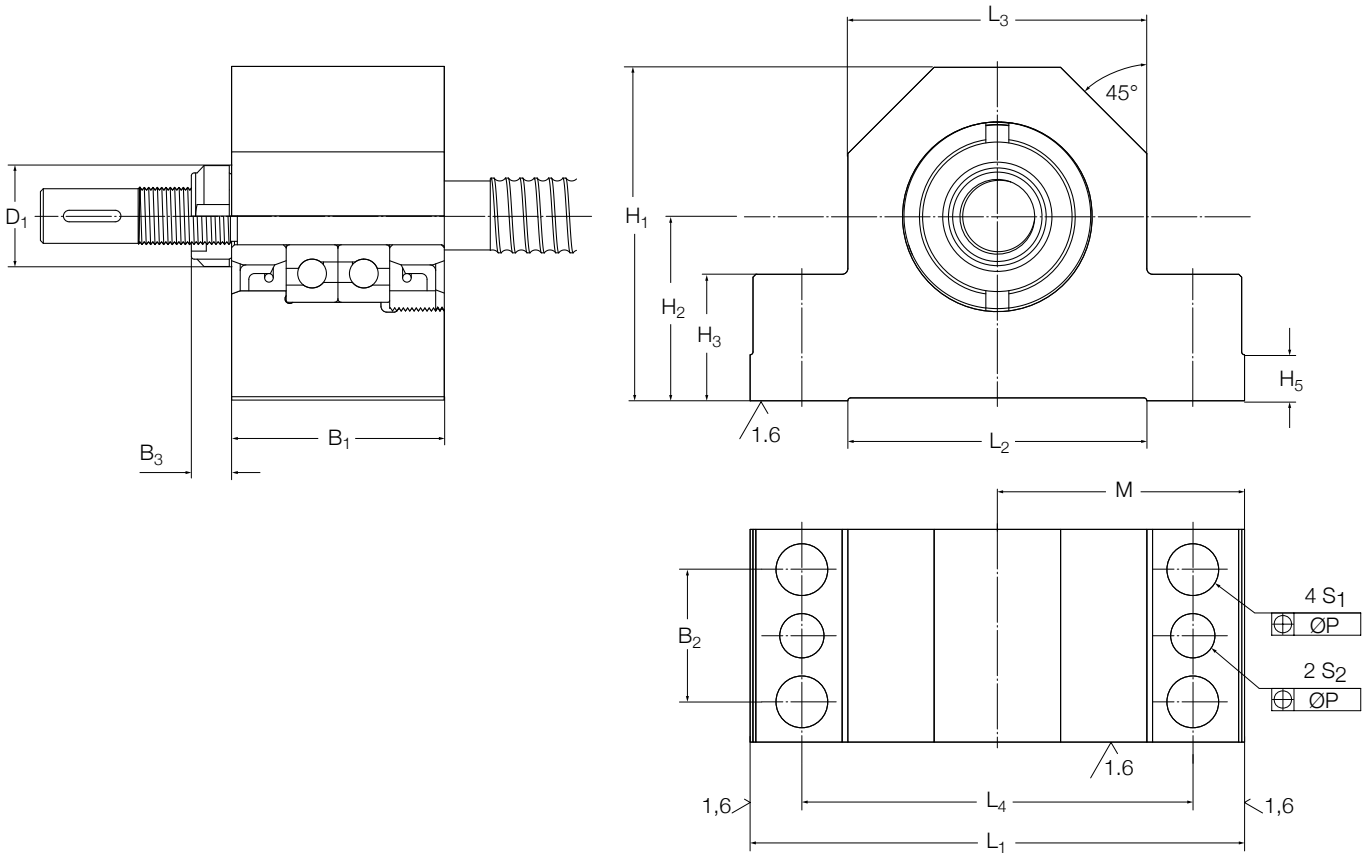

Screw	Support bearing																				
								Self-locking nut		High precision nut[4]										Fixing screws	Tapered pin (hardened) or straight pin (DIN6325)
d_0	L_1	L_2	L_3	L_4	M	B_1	B_2	B_3	D_1	B_3	D_1	H_1	H_2	H_3	H_4	H_5	S_1	P	S_2		
					js8								js8						H12		
mm	mm																			–	
16	86	52	52	68	43	37	23	7,0	18	14	28	58	32	22	15	8	9	0,15	7,7	M8×35	8×40
20	94	52	60	77	47	42	25	7,5	21	14	30	64	34	22	17	8	9	0,15	7,7	M8×35	8×40
25	108	65	66	88	54	46	29	8,3	28	18	37	72	39	27	19	10	11	0,20	9,7	M10×40	10×50
32	112	65	70	92	56	49	29	8,3	32	18	40	77	45	27	20	10	11	0,20	9,7	M10×40	10×50
40	126	82	80	105	63	53	32	11,0	44	20	49	98	58	32	23	12	13	0,20	9,7	M12×50	10×50
50	144	80	92	118	72	59	35	11,0	50	22	54	112	65	38	25	12	13	0,20	9,7	M12×55	10×55
63	190	110	130	160	95	85	40	11,7	68	25	75	130	65	49	35	15	13	0,20	9,7	M12×65	10×65

[4] Optional

BUF ball screw support bearings

Axially free pillow blocks fitted with SKF deep groove ball bearing

Features

- Precision machined housing made of burnished steel
- Precision machined side faces of the housing can be used as reference assembly surfaces for screw alignment
- One SKF deep groove ball bearing of type 62…2RS1
- Bearing is sealed and greased for life
- Retaining ring is supplied with the BUF assembly.

Benefits

- Complete support bearing ready to use, simplified application design, easy
  ordering process
- Quick assembly onto shaft end
- Elimination of most technical risks with bearings and seals assembly
- Greased for life / maintenance-free.

Technical data

Nominal diameter	Deep groove ball bearing						Retaining ring (DIN 471)	Pillow block designation
	Basic load rating radial		SKF bearing designation	Dimensions				
d_0	C	C_0		d	D	B		
mm	kN	kN	–	mm	mm	mm	–	–
16	5,07	2,36	6200.2RS1	10	30	9	10×1	BUF 16
20	5,07	2,36	6200.2RS1	10	30	9	10×1	BUF 20
25	9,56	4,75	6203.2RS1	17	40	12	17×1	BUF 25
32	9,56	4,75	6203.2RS1	17	40	12	17×1	BUF 32
40	19,5	11,2	6206.2RS1	30	62	16	30×1,5	BUF 40
50	19,5	11,2	6206.2RS1	30	62	16	30×1,5	BUF 50
63	33,2	21,6	6209.2RS1	45	85	19	45×1,75	BUF 63

Dimensional drawing

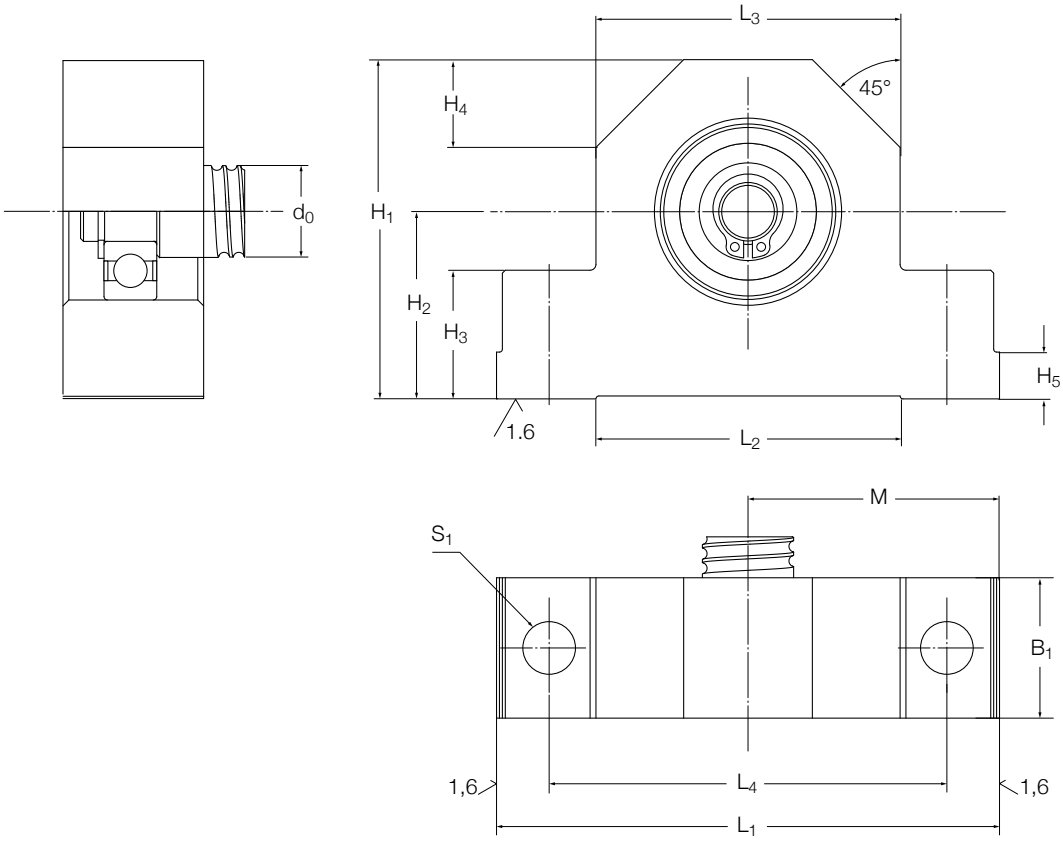

Screw	Support bearing												
d_0	L_1	L_2	L_3	L_4	M js8	B_1	H_1	H_2 js8	H_3	H_4	H_5	S_1 H12	Fixing screws
mm													–
16	86	52	52	68	43	24	58	32	22	15	8	9	**M8×35**
20	94	52	60	77	47	26	64	34	22	17	8	9	**M8×35**
25	108	65	66	88	54	28	72	39	27	19	10	11	**M10×40**
32	112	65	70	92	56	34	77	45	27	20	10	11	**M10×40**
40	126	82	80	105	63	38	98	58	32	23	12	13	**M12×50**
50	144	80	92	118	72	39	112	65	38	25	12	13	**M12×55**
63	190	110	130	160	95	38	130	65	49	35	15	13	**M12×65**

Examples of customized nuts

SD rotating nut with flange and bearing journals

SDS nut with integrated trunnions

SN rotating nut with flange and bearing journals

PN nut with customized compact flange

SL nut with customized flange attachment

EWELLIX

Manufacturing tolerances

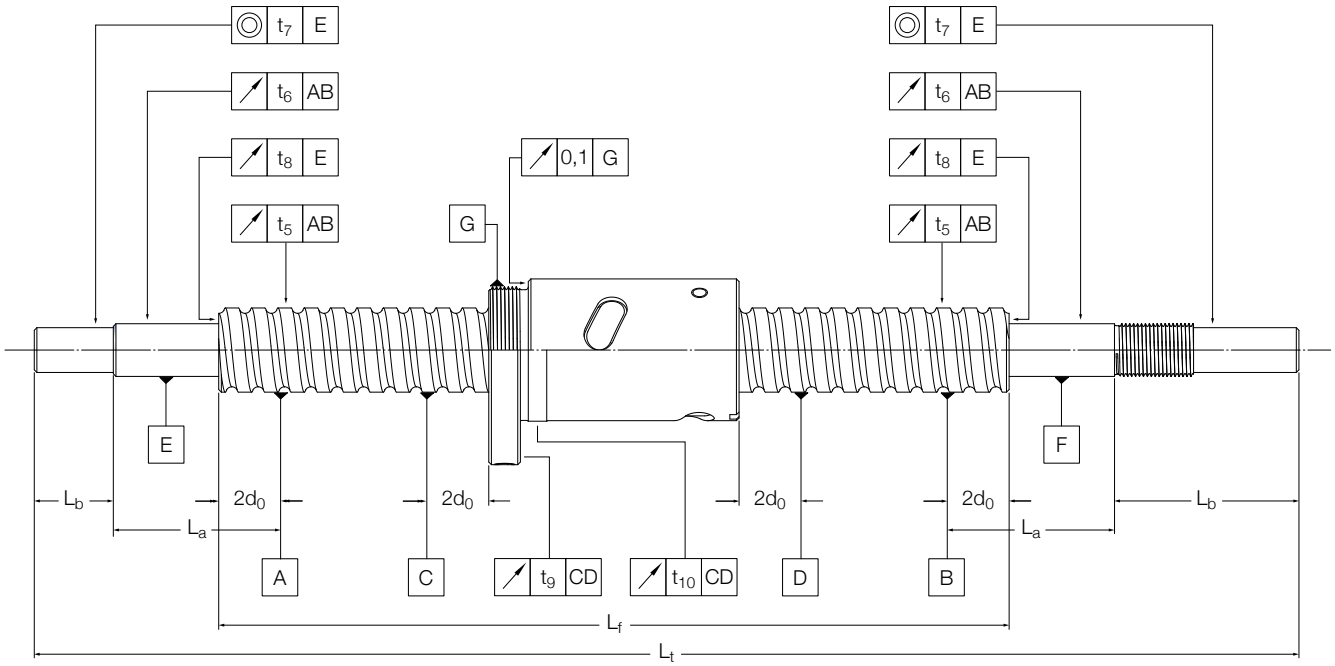

Nominal diameter		Reference lengths		Tolerances					
d_0		$L_{f\,ref}$	$L_{a\,ref}$ and $L_{b\,ref}$	t_{5p}	t_{6p}	t_{7p}	t_8	t_9	t_{10}
>	≤								
mm				µm					
6	12	80	80	40	40	12	6		
12	16	160	80	40	40	12	6	20	20
16	20	160	80	40	40	12	6	20	25
20	25	160	125	40	50	16	6	20	25
25	40	315	125	40	50	16	6	25	25
40	50	315	125	40	50	16	6	25	32
50	63	630	200	40	63	20	6	25	32

Ratio		Tolerances
L_f/d_0		
>	≤	t_5
–		µm
-	40	80
40	60	120
60	80	200
80	100	320

Value for t_5
if $L_f \leq L_{f\,ref}$ $t_5 = t_{5p}$
if $L_f > L_{f\,ref}$ t_5

Value for t_6
if $L_a \leq L_{a\,ref}$ $t_6 = t_{6p}$
if $L_a > L_{a\,ref}$ $t_6 = (L_a/L_{a\,ref})\, t_{6p}$

Value for t_7
if $L_b \leq L_{b\,ref}$ $t_7 = t_{7p}$
if $L_b > L_{b\,ref}$ $t_7 = (L_b / L_{b\,ref})\, t_{7p}$

Ordering key

Servo motor

SN | 32×5 | R | 330/445 | G7 | L – HA + K | **/** | WPR

Nut type

SD = Miniature screw, axial play, recirculation by inserts
BD = Miniature screw, backlash elimination, recirculation by inserts
SH = Miniature screw, axial play, recirculation by integrated tube
SDS = Miniature screw, axial play, stainless steel
BDS = Miniature screw, backlash elimination, stainless steel
SHS = Miniature screw, axial play, stainless steel, recirculation by integrated tube
SP = High performance miniature screw, axial play
BP = High performance miniature screw, backlash elimination
SX = Universal screw, axial play
BX = Universal screw, backlash elimination
SND = Precision screw, axial play, DIN nut
BND = Precision screw, backlash elimination, DIN nut
PND = Precision screw, preloaded, DIN nut
SN = Precision screw, axial play, cylindrical flange
BN = Precision screw, backlash elimination, cylindrical flange
PN = Precision screw, preloaded, cylindrical flange
SL = Long lead screw, axial play
TL = Long lead screw, backlash elimination
SLD = Long lead screw, axial play, DIN nut
TLD = Long lead screw, backlash elimination, DIN nut
SLT = Rotating nut, axial play
TLT = Rotating nut, backlash elimination

Nominal diameter ¥ Lead [mm]

Hand

R = Right
L = Left (on request)

Threaded length / Total length [mm]

Lead precision G5, G7, G9

Nut orientation

Nut threaded nose or nut flange towards shorter machined end of shaft (S)
Nut threaded nose or nut flange towards longer machined end of shaft (L)
In case of identical machining at both shaft ends (–)

Machined end combination

See **page 44**

Required lengths for AA, SA, UA (both ends)

See **page 44**

Options

WPR = with wipers
NOWPR = without wipers
RING = safety ring (for miniature ball screws only)
REDPLAY = reduced axial play

4

Mounting instructions and support

Assembly procedure

Ball screw assemblies are precision components and should be handled with care to avoid damaging shocks, contamination or corrosion.

Storage

Storage location must ensure that ball screw assemblies are not exposed to contamination, shocks, humidity and other detrimental actions.

When stored out of the shipping crate, ball screw assemblies must lie on wooden or plastic V-shaped blocks and should not be allowed to bounce. The assembly must not be supported on the shelf by the nut body.

During shipping, ball screw assemblies are wrapped in heavy gauge plastic bags, which protect them from foreign material and possible contamination. They should remain wrapped until they are used.

Alignment

After assembly, any radial load or moment loading on the nut will overload some of the contact surfaces, thus significantly reducing the service life (↳ **fig. 1**).

Ewellix linear guidance components should be used to ensure correct alignment and to avoid non-axial loading. The parallelism of the screw shaft with the guiding devices must be checked carefully. If external linear guidance proves impractical, we suggest mounting the nut on trunnions or gimbals, and mounting the screw shaft on self-aligning bearings.

Mounting the screw in tension helps to align it properly and eliminates buckling.

Lubrication

Good lubrication is essential for the proper operation and long term reliability of the ball screw assembly. If necessary, please consult Ewellix.

Before shipping, the complete ball screw assembly is coated with a protective fluid that dries to a film. This protective film is not a lubricant. Depending on the lubricant selected for the application, it may be necessary to remove the protective film before applying the lubricant in order to eliminate any risk of incompatibility. In such cases, we recommend the following procedure:

4.2.1. Dip the ball screw assembly into a solvent

4.2.2. Shake and rotate the assembly to allow the solvent to penetrate

4.2.3. Remove the assembly from the solvent and allow the solvent to drain.

Removing the nut / assembling the nut on the shaft

Removing the nut from the screw shaft

If possible, do not remove the nut from the shaft, especially for preloaded assemblies.
If the nut must be removed from the shaft, i.e. for shaft end machining, check the nut orientation before disassembly.

Never unscrew the nut from the shaft without a mandrel or sleeve to prevent the balls from falling off the nut (↳ **fig. 6**).

Once the nut is engaged on the sleeve, use a tie wrap to secure the nut assembly (↳ **fig. 5**).

Fitting sleeved nut onto screw shaft

Sleeved nuts should not be removed from the sleeve until final assembly.

4.2.1. Remove the retaining strap (↳ **fig. 5**)

4.2.2. Check the assembly drawing to confirm the nut orientation

4.2.3. Hold the sleeve against the ball track of the screw shaft and smoothly engage the ball nut (↳ **fig. 6**)
If the sleeve does not cover the diameter next to the ball track (for example, the sleeve bore diameter is smaller than the screw shaft end), then adhesive tape can be used to match the shaft end to the sleeve outer diameter.
Otherwise, the sleeve can be held against the un-machined end, if available, with extreme care to prevent the balls from falling off the nut

4.2.4. Without using force, completely engage the nut in the screw thread, and run the nut to full engagement on the screw shaft.

Wiper assembly

If optional wipers have been ordered, please refer to the fitting instructions enclosed with the shipment.

Starting–up the screw

After the assembly has been cleaned, fitted and lubricated, allow the nut to make several full strokes at low speed (< 50 rpm) and light load (not to exceed 5% of the ball screw dynamic carrying capacity) in order to check the proper positioning of the limit switches or reversing mechanism. Then, normal load and speed can be applied.

Note:

Instructions for most operations such as fitting a nut onto a screw shaft, a wiper onto a nut, etc. are available in separate sheets delivered with the product. Please refer to them before assembling the screw.

Fig. 5

Fig. 6

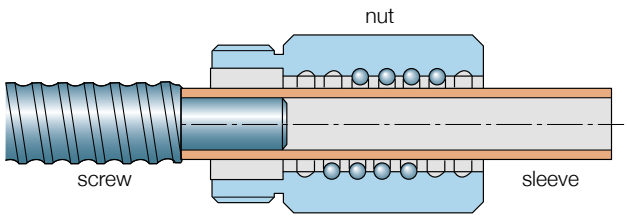

Service range

Quick service for precision rolled ball screws

For reduced delivery time, Ewellix operates quick service facilities in Europe and in North America, where standard screw shafts, nuts and accessories are stocked.

Ball screw orders

Customers can order ball screws with the following options:

- Stock items of screws shafts and nuts, without machined ends. Nuts with axial play mounted on screw shaft, or on sleeve. Nuts with backlash elimination or with preload mounted on shaft
- Ball screw assemblies with shaft ends machined according to standard ends as defined in this catalogue
- Ball screw assemblies with shaft ends machined according to customer requirements: In this case, please send a drawing with all dimensional and tolerance requirements, and with all specifications written in English
- Complete ball screw assemblies, including accessories presented in this catalogue. Accessories already mounted on nut or shaft, or delivered separately.

General rules

Delivery time

- From a couple of days to maximum two weeks is possible for orders fulfilling the following conditions

Quantity

- Maximum 5 pieces for types SX/BX – SND/BND/PND – SN/BN/PN – SL/TL – SLD/TLD (delivered with wipers)
- Maximum 15 pieces for types SD/BD/SH

Materials

- Both shaft and nut should be made of standard steel, as stated in the present catalogue

Capabilities

- Standard nuts, including DIN nuts
- Screw shafts machined according to customer drawing
- Backlash elimination by oversized balls available for BD – BX – BND/BN
- Preload available for PND/PN – TL/TLD
- General precision on tolerances ISO IT7 (ISO 3408-3:2006)
- One nut per screw shaft

Other conditions for quick delivery

- Rotating nut SLT/TLT types are excluded from this program
- Stainless steel or special treatments, including annealed shaft ends, splines are excluded from this program
- Material certificates, special reports, or orders that require special procedure and approval by the French authorities are excluded for this program.

Available range

Diameter	Lead	Nut types	Lead precision	Accessories
From 6 to 63 mm	From 2 to 50 mm	Cylindrical and flanged nuts with axial play, backlash elimination, or preload, Ewellix designs or DIN designs	G5 – G7 – G9	Flanges for nuts, and ball screw support bearings

Design calculation and inquiry form

Customer and project information

Company name .....

Address .....

Contact name ..... Phone number .....

Email ..... Website .....

Project name.....

Application type .....

Short description of application
(please attach a sketch if possible) .....

Annual ball screw requirements
and start of production date .....

Prototype requirements
and suitable delivery date .....

For existing or modified application,
type of ball screw already used .....

Ball screw data

Design parameter	Value
Maximum stroke [mm]	.....
Threaded length [mm]	.....
Total length [mm]	.....
Pre-selection of screw shaft nominal diameter d_0 [mm]	.....
Pre-selection of lead P_h [mm]	.....
Pre-selection of nut type	.....
Lead precision grade according to ISO 3408	.....
Pre-selection of axial play, backlash elimination or preload	.....
If axial play is selected, preferred min/max range [µm]	.....
Request for accessories (flanges, support bearings, etc.)	.....
Other pertinent information	.....

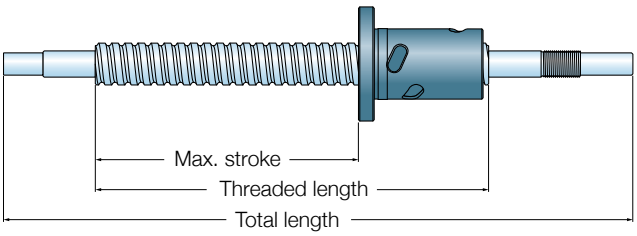

Operating conditions

Maximum loads

- Maximum static load or shock load [N] .....
- Maximum dynamic load in tension [N] .....
- Maximum dynamic load in compression [N] .....

- Average linear speed [m/min] .....
- Maximum linear speed [m/min] .....
- Maximum acceleration [m/s²] .....

Lubrication

- Brand name .....
- Type .....
- Viscosity at average operating temperature [cSt] .....

Operating temperature

- Minimum [°C] .....
- Average [°C] .....
- Maximum [°C] .....

Required service life

- Travel [m] .....
- Or revolutions [rev] .....
- Or duration [hours] .....

Duty cycle description

Step	Axial force [N]	Speed, either rotational speed [rpm] or linear speed [m/minute]	Travel [mm]
1	.....	.....	.....
2	.....	.....	.....
3	.....	.....	.....
4	.....	.....	.....
5	.....	.....	.....
Etc.	.....	.....	.....

Mounting conditions

Position of the screw	☐ Vertical	☐ Horizontal
Rotating part	☐ Screw	☐ Nut
Screw end fixing conditions	N 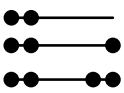	(fixed, free)
	N	(fixed, radial support)
	N	(fixed, fixed)

Other pertinent information

.....

.....

.....

.....

Ball screw catalogue, ball screw 2D prints and 3D models are available on **www.ewellix.com**
Please send inquiry form to your Ewellix sales office. For contact information, please visit **www.ewellix.com**

ewellix.com

© Ewellix
All contents of this publication are the property of Ewellix, and may not be reproduced or given to third parties (even extracts) without permission. Although great care has been taken in the production of this catalog, Ewellix does not take any responsibility for damage or other loss resulting from omissions or typographical errors. The photo may differ slightly in appearance from the actual product. Due to continuous improvements being made in our products, the product's appearance and specifications are subject to change without notice.

PUB IL-05004/1-EN-July 2020

Certain image(s) used under license from Shutterstock.com.
SKF and SKF logo are trademarks of the SKF Group