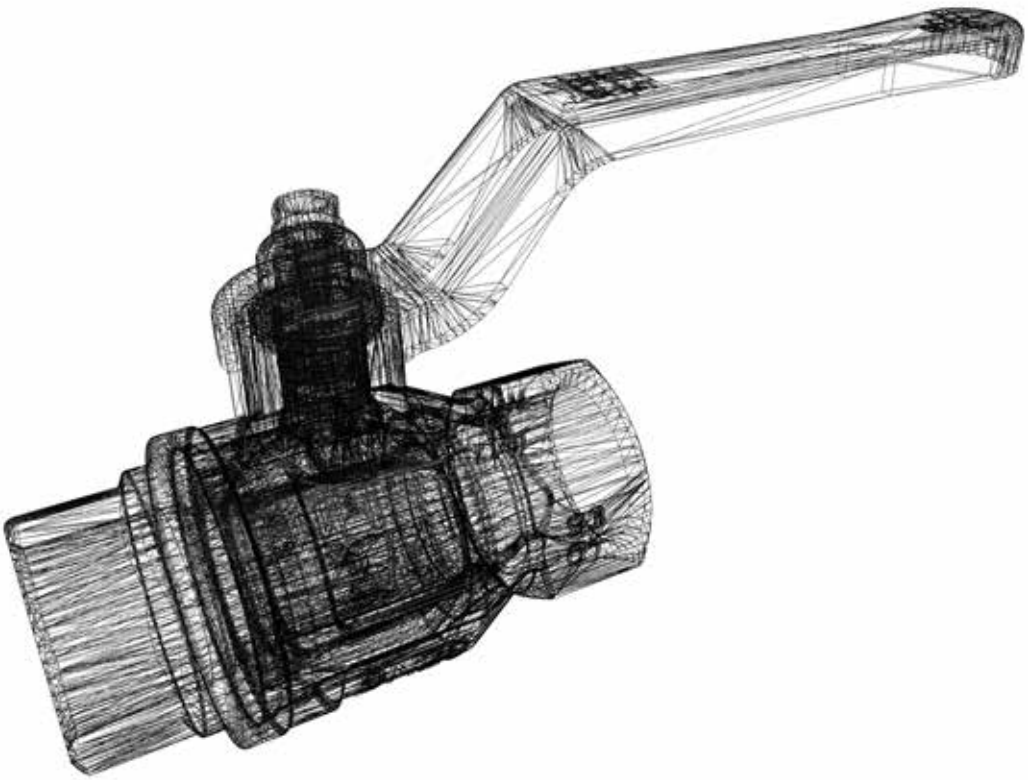

TECHNICAL CATALOGUE

BALL VALVES: PARIS®

ITAP SpA, founded in Lumezzane (Brescia) in 1972, is currently one of the leading production companies in Italy of valves, fittings and distribution manifolds for plumbing and heating systems. Thanks to fully automated production processes, with 72 tooling machines and 51 assembly lines, we are able to produce 200,000 pieces per day. Our innate pursuit for innovation and observance of technical regulations is supported by the company certification ISO 9001: 2008. The company has always considered its focus on quality as the main tool to obtain significant business results: today ITAP SpA is proud to offer products bearing the approval of numerous international certifying bodies.

FULL FLOW BALL VALVES: PARIS®

SUITABLE FOR DOMESTIC WATER SERVICES, HEATING AND AIR-CONDITIONING PLANTS, COMPRESSED AIR SYSTEMS.

080

PARIS® BALL VALVE, FULL FLOW

SIZE	PRESSURE	CODE	PACKING
1/2" (DN 15)	50bar/725psi	080B012	12/96
3/4" (DN 20)	40bar/580psi	080B034	8/40
1" (DN 25)	40bar/580psi	080B100	6/30
1"1/4 (DN 32)	30bar/435psi	080B114	4/24
1"1/2 (DN 40)	30bar/435psi	080B112	2/18
2" (DN 50)	25bar/362,5psi	080B200	2/10

TECHNICAL SPECIFICATIONS

Female/female threads.
Lever handle in steel.
Body in nickel-plated brass.
Minimum and maximum working temperatures:
-20°C, 150°C in absence of steam.
Female threads:ISO 7/1 Rp parallel
(equivalent to DIN EN 10226-1 and BS EN 10226-1).

MATERIALS

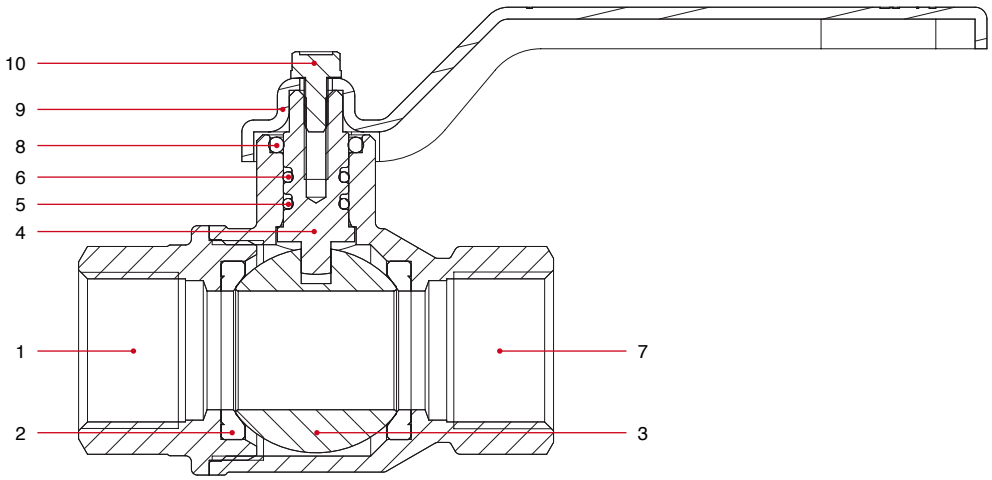

POS.	DESCRIPTION	N.	MATERIAL
1	End adapter	1	Nickel-plated brass CW617N
2	Seat	2	P.T.F.E.
3	Ball	1	Chrome-plated brass CW617N
4	Stem	1	Brass CW614N
5	O-Ring	1	NBR
6	O-Ring	1	VITON®
7	Body	1	Nickel-plated brass CW617N
8	O-Ring	1	NBR
9	Lever handle	1	Zinc-plated and varnished steel Fe.P.04
10	Screw	1	Zinc-plated steel Fe CB4

OVERALL DIMENSIONS

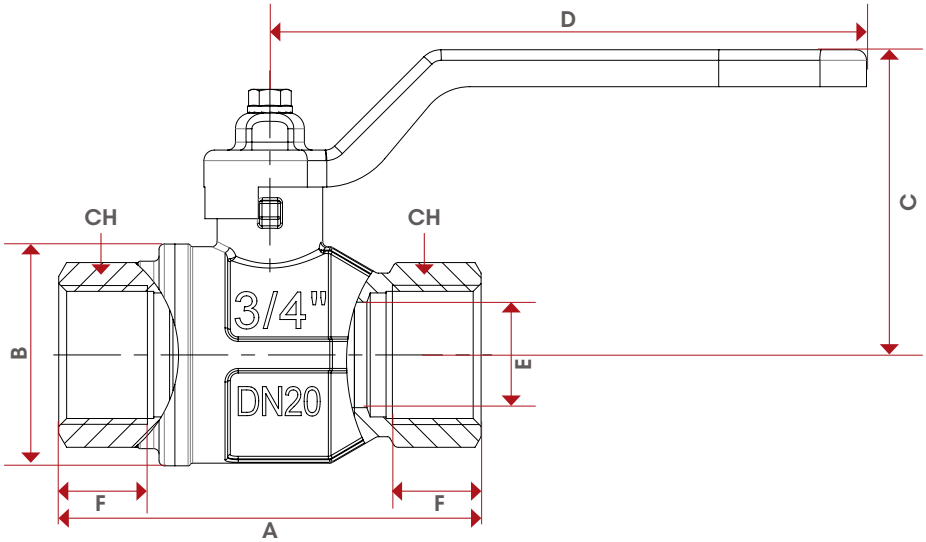

	1/2"	3/4"	1"	1"1/4	1"1/2	2"
DN	15	20	25	32	40	50
A	75	80	90	110	120	140
B	32,5	42	49,5	59,5	72	86
C	49	58	61	75	91	98
D	88,5	113	113	138	157,8	157,8
E	15	20	25	32	40	50
F	15	16,3	19,1	21,4	21,4	25,7
CH	25	31	40	49	54	68,5
Kg/cm² bar	50	40	40	30	30	25
LBS - psi	725	580	580	435	435	362,5

CERTIFICATIONS

081

PARIS® BALL VALVE, FULL FLOW

SIZE	PRESSURE	CODE	PACKING
1/2" (DN 15)	50bar/725psi	081B012	12/96
3/4" (DN 20)	40bar/580psi	081B034	8/40
1" (DN 25)	40bar/580psi	081B100	6/30
1"1/4 (DN 32)	30bar/435psi	081B114	4/24
1"1/2 (DN 40)	30bar/435psi	081B112	2/18
2" (DN 50)	25bar/362,5psi	081B200	2/10

TECHNICAL SPECIFICATIONS

Male/female threads.
Lever handle in steel.
Body in nickel-plated brass.
Minimum and maximum working temperatures:
-20°C, 150°C in absence of steam.
Female threads:ISO 7/1 Rp parallel
(equivalent to DIN EN 10226-1 and BS EN 10226-1).
Male threads ISO 7/1 R taper
(equivalent to DIN EN 10226-1 and BS EN 10226-1).

MATERIALS

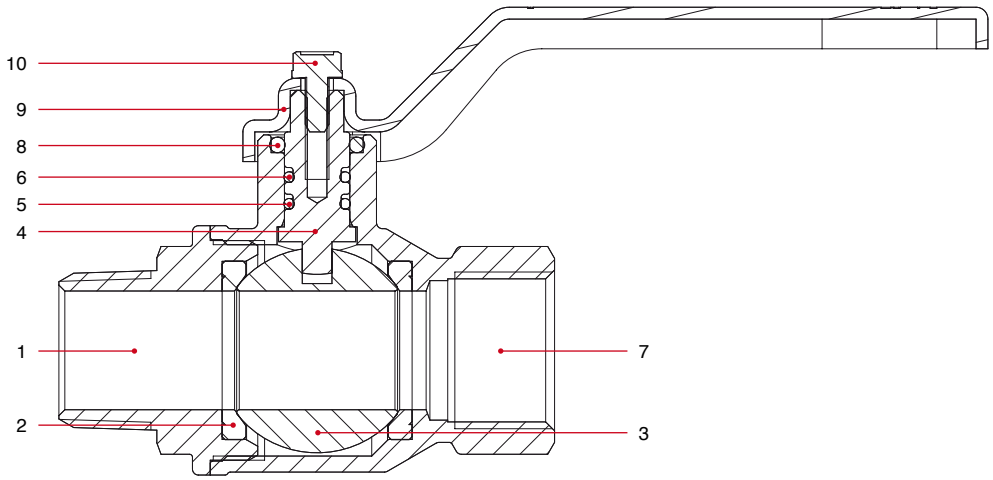

POS.	DESCRIPTION	N.	MATERIAL
1	End adapter	1	Nickel-plated brass CW617N
2	Seat	2	P.T.F.E.
3	Ball	1	Chrome-plated brass CW617N
4	Stem	1	Brass CW614N
5	O-Ring	1	NBR
6	O-Ring	1	VITON®
7	Body	1	Nickel-plated brass CW617N
8	O-Ring	1	NBR
9	Lever handle	1	Zinc-plated and varnished steel Fe.P.04
10	Screw	1	Zinc-plated steel Fe CB4

OVERALL DIMENSIONS

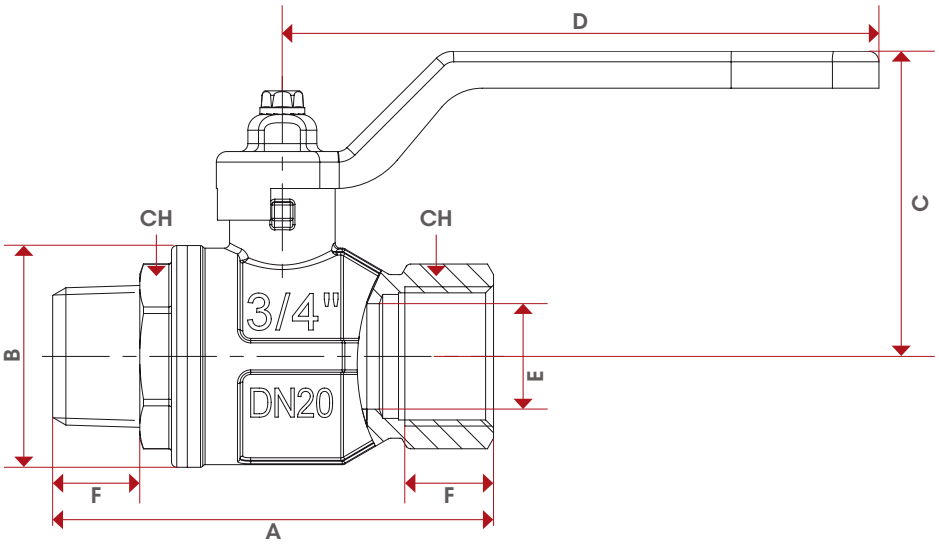

	1/2"	3/4"	1"	1"1/4	1"1/2	2"
DN	15	20	25	32	40	50
A	76,5	83,5	93	110	121	140,5
B	32,5	42	49,5	59,5	72	86
C	49	58	61	75	91	98
D	88,5	113	113	138	157,8	157,8
E	15	20	25	32	38	49
F	15	16,3	19,1	21,4	21,4	25,7
CH	25	31	40	49	54	68,5
Kg/cm² bar	50	40	40	30	30	25
LBS - psi	725	580	580	435	435	362,5

CERTIFICATIONS

082

PARIS® BALL VALVE, FULL FLOW

SIZE	PRESSURE	CODE	PACKING
1/2" (DN 15)	50bar/725psi	082B012	12/96
3/4" (DN 20)	40bar/580psi	082B034	8/64
1" (DN 25)	40bar/580psi	082B100	8/40

TECHNICAL SPECIFICATIONS

Female/female threads.
T handle in aluminium.
Body in nickel-plated brass.
Minimum and maximum working temperatures:
-20°C, 150°C in absence of steam.
Female threads:ISO 7/1 Rp parallel
(equivalent to DIN EN 10226-1 and BS EN 10226-1).

MATERIALS

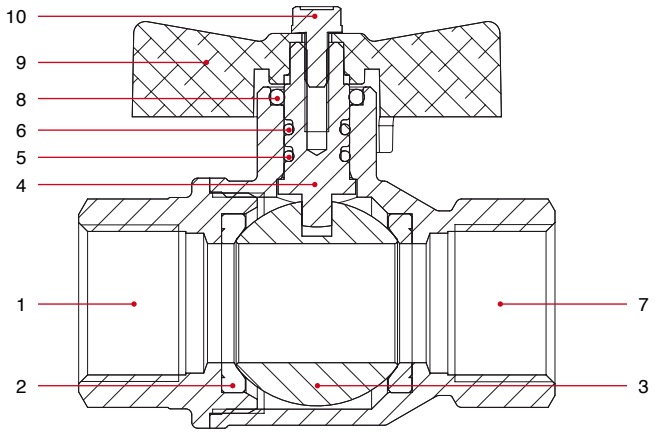

POS.	DESCRIPTION	N.	MATERIAL
1	End adapter	1	Nickel-plated brass CW617N
2	Seat	2	P.T.F.E.
3	Ball	1	Chrome-plated brass CW617N
4	Stem	1	Brass CW614N
5	O-Ring	1	NBR
6	O-Ring	1	VITON®
7	Body	1	Nickel-plated brass CW617N
8	O-Ring	1	NBR
9	T handle	1	Varnished aluminium
10	Screw	1	Zinc-plated steel Fe CB4

OVERALL DIMENSIONS

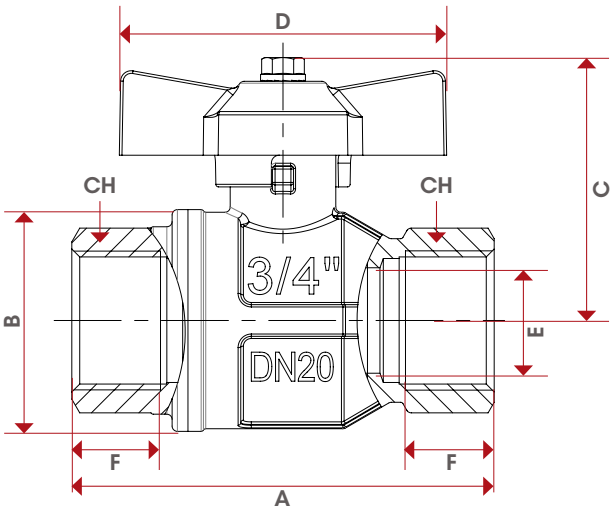

	1/2"	3/4"	1"
DN	15	20	25
A	75	80	90
B	32,5	42	49,5
C	44	50	53
D	54	62	62
E	15	20	25
F	15	16,3	19,1
CH	25	31	40
Kg/cm² bar	50	40	40
LBS - psi	725	580	580

CERTIFICATIONS

083

PARIS® BALL VALVE, FULL FLOW

SIZE	PRESSURE	CODE	PACKING
1/2" (DN 15)	50bar/725psi	083B012	12/96
3/4" (DN 20)	40bar/580psi	083B034	8/64
1" (DN 25)	40bar/580psi	083B100	8/48

TECHNICAL SPECIFICATIONS

Male/female threads.
T handle in aluminium.
Body in nickel-plated brass.
Minimum and maximum working temperatures:
-20°C, 150°C in absence of steam.
Female threads:ISO 7/1 Rp parallel
(equivalent to DIN EN 10226-1 and BS EN 10226-1).
Male threads ISO 7/1 R taper
(equivalent to DIN EN 10226-1 and BS EN 10226-1).

MATERIALS

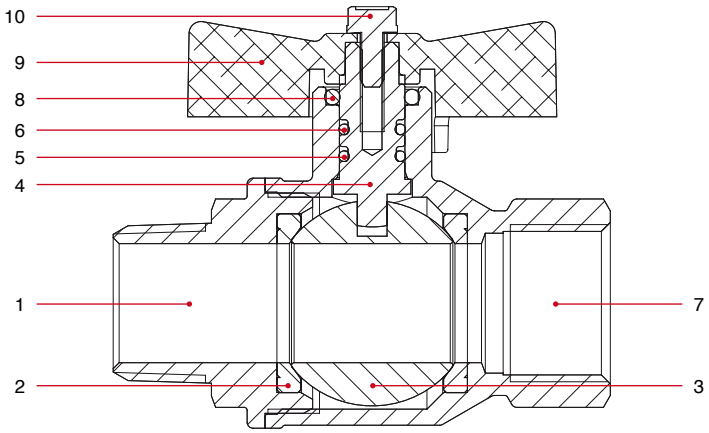

POS.	DESCRIPTION	N.	MATERIAL
1	End adapter	1	Nickel-plated brass CW617N
2	Seat	2	P.T.F.E.
3	Ball	1	Chrome-plated brass CW617N
4	Stem	1	Brass CW614N
5	O-Ring	1	NBR
6	O-Ring	1	VITON®
7	Body	1	Nickel-plated brass CW617N
8	O-Ring	1	NBR
9	T handle	1	Varnished aluminium
10	Screw	1	Zinc-plated steel Fe CB4

OVERALL DIMENSIONS

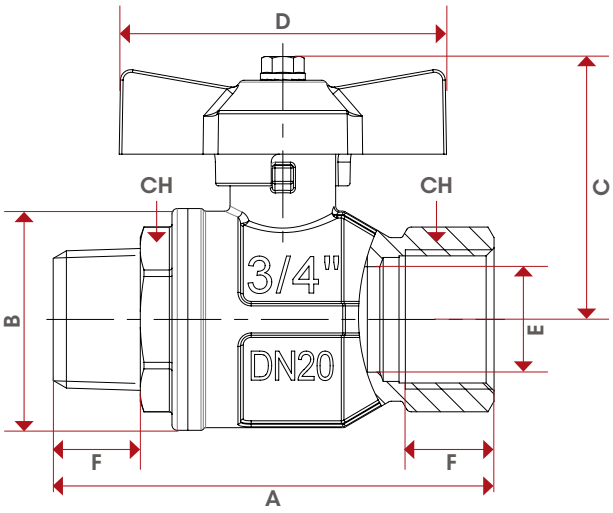

	1/2"	3/4"	1"
DN	15	20	25
A	76,5	83,5	93
B	32,5	42	49,5
C	44	50	53
D	54	62	62
E	15	20	25
F	15	16,3	19,1
CH	25	31	40
Kg/cm² bar	50	40	40
LBS - psi	725	580	580

CERTIFICATIONS

FLOW RATE AND PRESSURE DROP CHART

WITH WATER

Art: 080 - 081 - 082 - 083

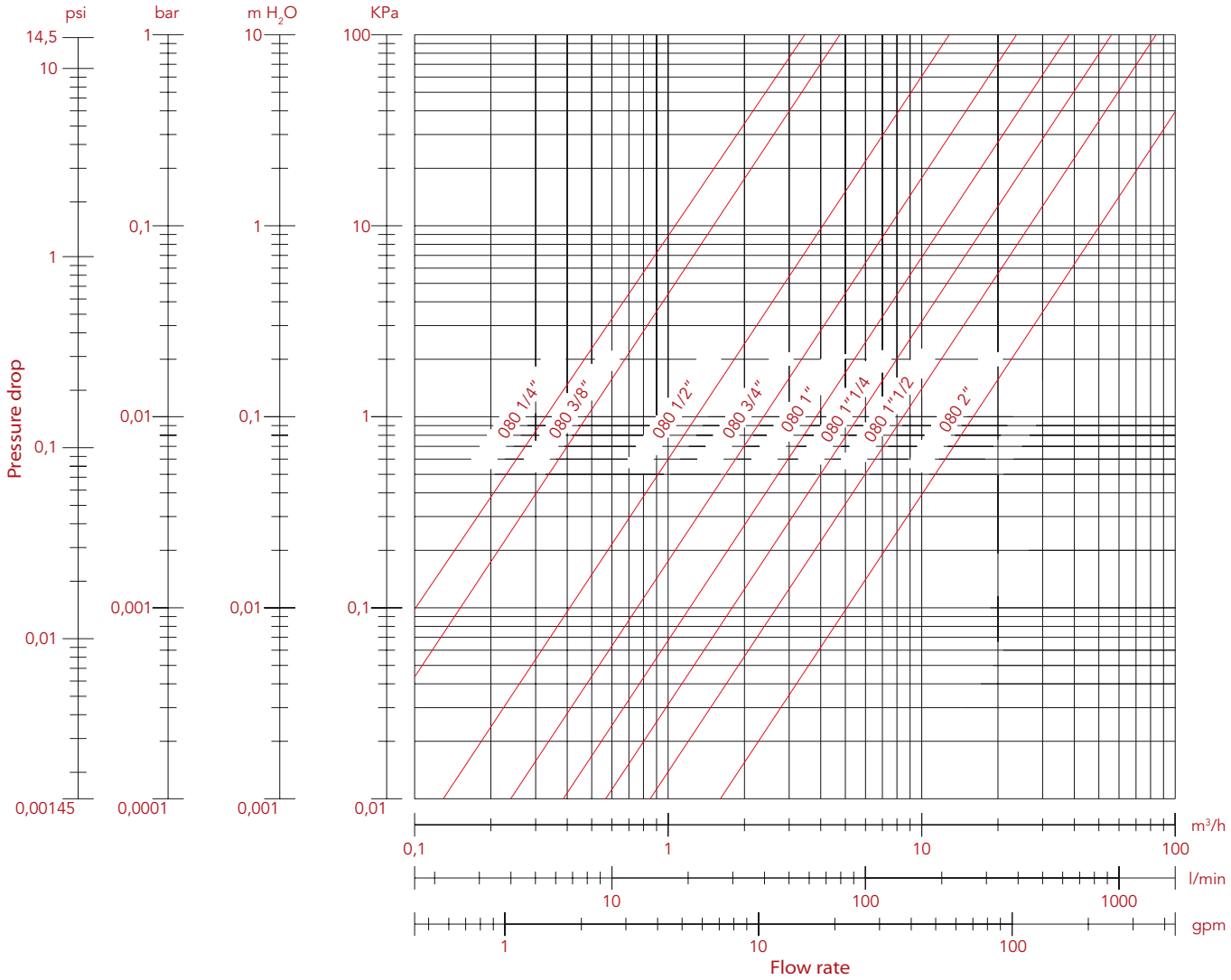

SIZE	1/4"	3/8"	1/2"	3/4"	1"	1"1/4	1"1/2	2"
Ø	10	10	15	20	25	32	40	50
Kv	3,47	4,78	12,98	23,92	38,57	56,81	85	159

PRESSURE-TEMPERATURE DIAGRAM

BALL VALVES

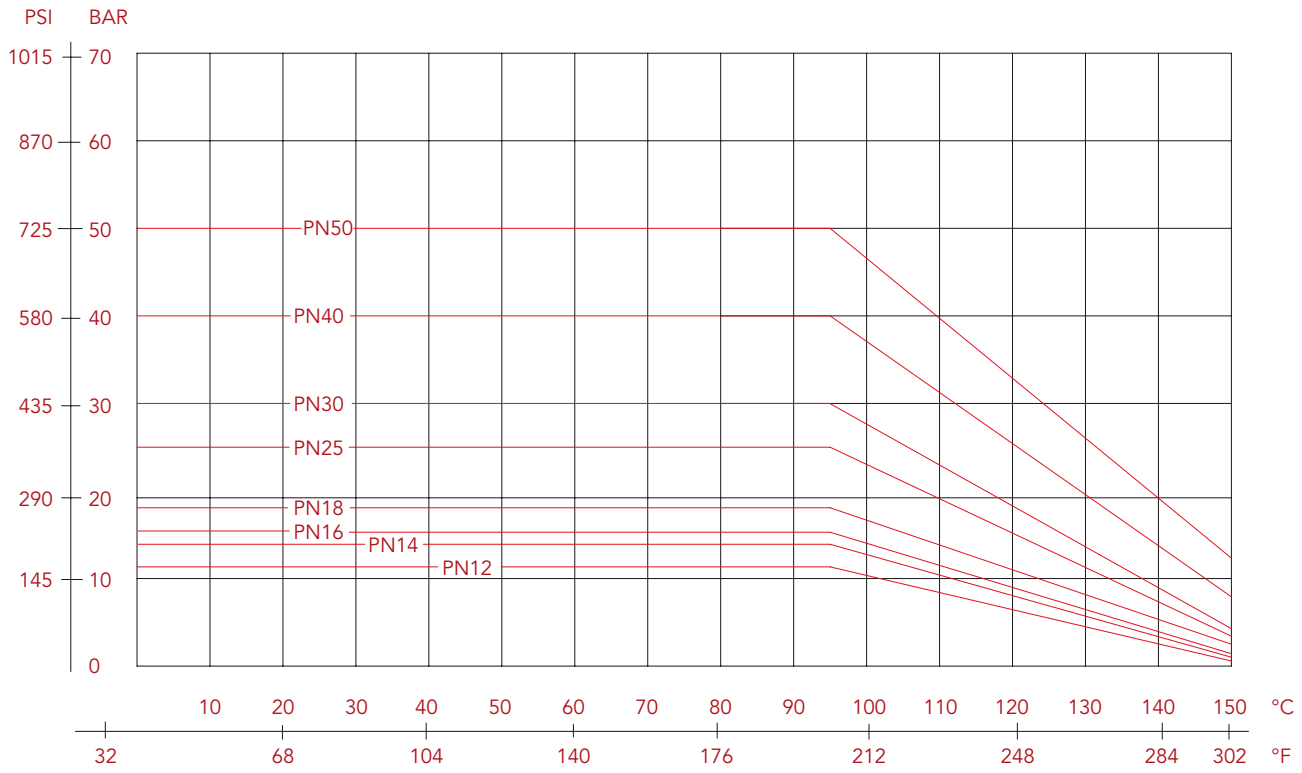

The values shown by the dropping lines state the maximum limit of employment of the valves.
The shown valves are approximate.

MANIFACTURER INSTRUCTIONS

Installation

The itap S.p.A.'s valves are bi-directional, that means they manage the flow in both the directions. The valves are composed by a ball, two seal in PTFE material, one stem, two sailing rings (O-Rings), one handle and a couple of parts made of brass (body and end adopter) that contain them and that are assembled by means of threat and a sealed material to obtain their aim. To avoid that the sealing material gets brake and than the valve gets lose the connection between body and the end adopter, it's necessary to avoid to submit the two parts under the influence of a torque.
For their installation ones have to use the normal hydraulic practices, and in particular:

• Ones have to be sure that the two pipes are correctly aligned,

• during the assembling ones have to apply the assembling tool at the end that is nearest to the pipe,

• the application of the sealing materials by the fitter (PTFE or hempen cloth) must be limited at the threat zone. An excess should interferes in the ball-gasket's closure zone, compromising the tightness.

• In the case that the fluid transported presents some impurities (dust, water too hard, etc.) ones have to remove these impurities by the means of a filter. Otherwise they could damage the seals.

Disassembly the installed valve

To remove the valve from the pipe line or anyhow before to unscrew the junctions linked to it:
• wear the clothing protective normally required to work with the fluid transported within the line.
• Depressurizze the line and operate in this way:
-positioning the valve in opened position and than empty the line
-handle the valve to put down the residue pressure contained inside the space between the ball and the body before of remove it from the line,
-during the disassembly apply the screw tool at the end of the valve nearest the pipe

Maintenance

Verify the valves periodically, in function oh their application's field and in function of their work conditions, to be sure that the valves work correctly.