EWELLIX

MAKERS IN MOTION

High performance actuator catalogue

Contents

1. Introduction 4
Core technologies 5
Product overview 8
Product range comparison 10
Product benefits of electric cylinders over pneumatic and hydraulic cylinders 14
Customization capabilities 22
Application examples 28
System set-up 40
Ewellix engineering tools 43

2. Calculation 44
Actuator select performance calculator 45
Simplified calculation process 47
General calculation formulae 48
Motor selection 50
Calculation examples 52
Fluid power replacement advices 56

3. Product range 58
Electric cylinders CASM-25 59
CASM-25 Linear unit 61
CASM-25 Servomotor 62
Electric cylinders CASM-32/40/63 65
CASM-32 Linear unit 74
CASM-40 Linear unit 76
CASM-63 Linear unit 78
CASM-32-LS inline configuration 82
CASM-32-LS parallel configuration 84
CASM-32-BS inline configuration 86
CASM-32-BS parallel configuration 88
CASM-32-BN inline configuration 90
CASM-32-BN parallel configuration 92
CASM-40-LS inline configuration 94
CASM-40-LS parallel configuration 96
CASM-40-BS inline configuration 98
CASM-40-BS parallel configuration 100
CASM-40-BN inline configuration 102
CASM-40-BN parallel configuration 104
CASM-63-LS inline configuration 106
CASM-63-LS parallel configuration 108
CASM-63-BS inline configuration 110
CASM-63-BS parallel configuration 112
CASM-63-BN inline configuration 114
CASM-63-BN parallel configuration 116
CASM-63-BF inline configuration 118
CASM-63-BF parallel configuration 120
Electric cylinders CASM-100 130
CASM-100 Linear unit 144
CASM-100-BA inline configuration 150
CASM-100-BB inline configuration 152
CASM-100-BC inline configuration 154
CASM-100-RA inline configuration 156
Electric cylinders LEMC 168
LEMC-U-21 Linear unit 180
LEMC-U-30 Linear unit 182
LEMC-S-2105 inline configuration 186
LEMC-S-2105 parallel configuration 188
LEMC-S-2110 inline configuration 190
LEMC-S-2110 parallel configuration 192
LEMC-S-3005 inline configuration 194
LEMC-S-3005 parallel configuration 196
LEMC-S-3010 inline configuration 198
LEMC-S-3010 parallel configuration 200
LEMC-A-2110 L-configuration 204
LEMC-A-2110 parallel configuration 206
LEMC-A-3005 L-configuration 208
LEMC-A-3005 parallel configuration 210
Electric cylinders CEMC 216
CEMC-2105 Natural convection cooling 220
CEMC-2105 Water cooling 222
Electric cylinders SRSA and SVSA 230
SRSA-U-39xx Linear unit 236
SRSA-U-48xx Linear unit 238
SRSA-U-60xx Linear unit 240
SRSA-U-75xx Linear unit 242
SVSA-U-xx01 Linear unit 244
SRSA-S-39xx inline configuration 248
SRSA-S-39xx parallel configuration 250
SRSA-S-48xx inline configuration 252
SRSA-S-48xx parallel configuration 254
SRSA-S-60xx inline configuration 256
SRSA-S-60xx parallel configuration 258
SRSA-S-75xx inline configuration 260
SRSA-S-75xx parallel configuration 262
SVSA-S-xx01 inline configuration 264
SVSA-S-xx01 parallel configuration 267

4. Customized solutions 275
Servo pillar CPSM 276
CPSM Servo pillar 277
Servo actuator SEMC 282
SEMC 276
SEMC Linear unit 284
SEMC inline configuration 286
SEMC inline configuration 288

5. Glossary and symbols description 292
Glossary 293
Symbols description 297

EWELLIX

The heritage of innovation

Ewellix is a global innovator and manufacturer of linear motion and actuation solutions. Today, our state-of-the-art linear solutions are designed to increase machine performance, maximise uptime, reduce maintenance, improve safety and save energy.

Technology leadership

Our journey began **over 50 years** ago as part of the SKF Group, and our history with SKF provided us with the **expertise to continuously develop new technologies** and use them to create cutting edge products that offer our customers a competitive advantage.

In 2019, we became independent from SKF and changed our name to Ewellix. We are proud of our heritage. This gives us a unique foundation on which to build an agile business with engineering excellence and innovation as our core strengths.

Global presence and local support

With our **global** presence, we are uniquely positioned to deliver **standard components and custom-engineered solutions**, with full technical and applications support around the world. Long standing relationships with our distributor partners allow us to support customers in a variety of different industries. At Ewellix, we don't just provide products; **we engineer integrated solutions** that help customers realise their ambitions.

1 400 employees

16 sales units

9 factories

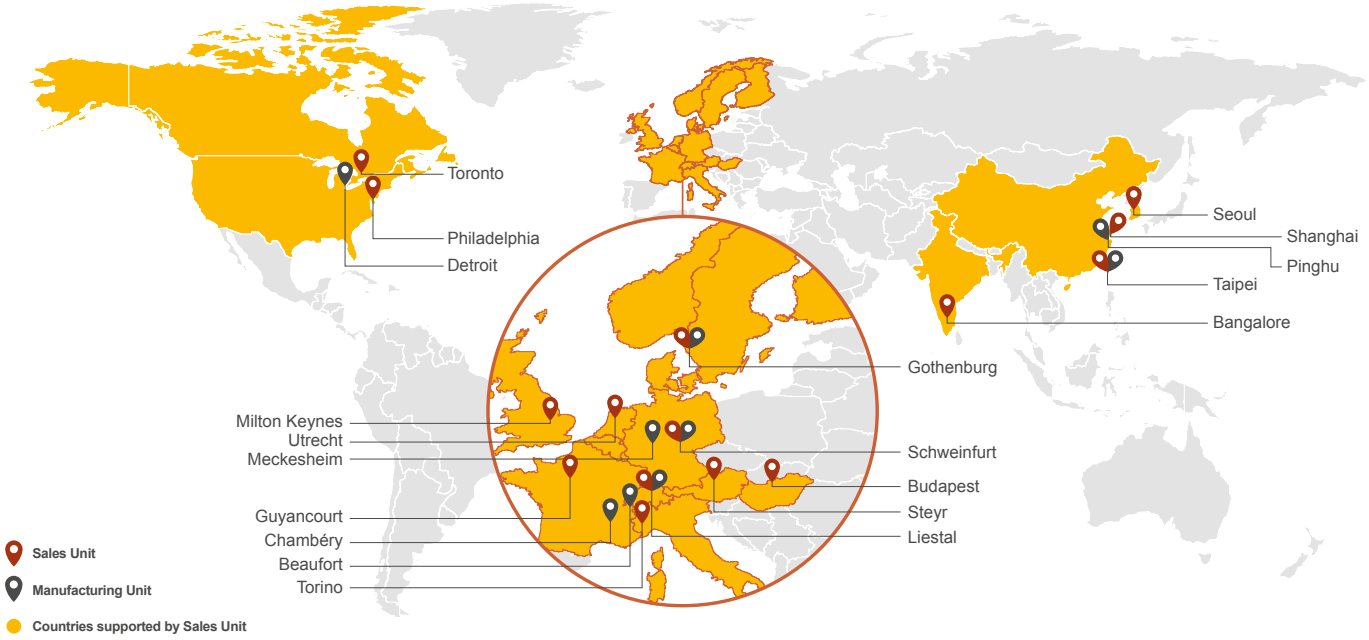

EWELLIX

Trusted engineering expertise

Our industry is in motion; pushing towards solutions that reduce environmental impact and leverage new technology. We provide technical and manufacturing expertise to overcome our customers' challenges.

Engineering for the future

We work in a **wide range of industries**, where our solutions provide key functionality for business critical applications.

For the **medical industry**, we provide precision components for use in core medical equipment.
Our unparalleled understanding of **industrial automation** systems is based on decades of research into advanced automation components and techniques

Our deep knowledge of **mobile machinery** provides powerful and reliable electromechanical solutions for the harshest conditions. In an **industrial distribution** setting, we supply linear expertise to our partners, empowering them to serve customers with greater efficiency

We offer excellence

We have a **unique understanding of linear equipment** and how it's integrated in customers' applications to provide the best performance and machine efficiency.

We assist our customers by creating equipment that runs faster, longer and safer and that is sustainable.
We provide a wide variety of **linear motion components** and **electromechanical actuators** for equipping any automation application, helping our customers **reduce its footprint, energy use and maintenance**.

We push for lower energy consumption that **increases productivity and reduces the environmental impact**.

Actuation systems

Ball and roller screws

Linear guides and systems

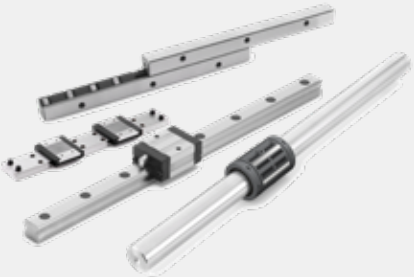

1

Introduction

Energy savings up to 90%

EWELLIX

Core technologies

Actuation technology

Our extensive experience and knowledge of actuation systems allows us to satisfy the most demanding requirements using linear actuators, telescopic pillars and control units.

Linear actuators

We offer a wide range of low- to medium-duty actuator designs and configurations for simple industrial or specific health care applications. Our versatile range provides everything from low- to high-load capacities and medium operating speeds to quiet and aesthetically designed systems (↳ **fig. 1**).

High-performance actuators

Our range of high-duty actuators meets the needs of demanding industrial applications with high loads and speeds in continuous operation. These actuators provide the best controllability and reliability for programmable motion cycles (↳ **fig. 2**).

Telescopic pillars

We offer a wide range of options for several applications. In addition, our telescopic pillars are quiet, robust, powerful, resistant to high offset loads and feature attractive designs (↳ **fig. 3**).

Control units

Ideal for applications focused on system control, Ewellix control units provide connections for foot and hand or desk switches (↳ **fig. 4**).

Fig. 1

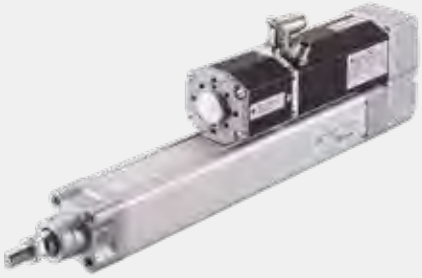

Fig. 2

Fig. 3

Fig. 4

Ball and roller screw technology

For applications that require driving by transforming rotary action into linear motion, we provide a comprehensive range of solutions including rolled ball screws, roller screws and ground ball screws.

Miniature ball screws

Ewellix miniature ball screws are very compact and provide silent operations (↳ **fig. 5**).

Rolled ball screws

We offer several, highly precise recirculating systems to cover most application requirements which can reduce or eliminate backlash (↳ **fig. 6**).

Ground ball screws

Ewellix ground ball screws offer increased rigidity and precision.

Roller screws

Ewellix roller screws go far beyond the limits of ball screws providing the ultimate precision, rigidity, high speed and acceleration. In addition, backlash can be reduced or eliminated. Long leads are available for very fast movements (↳ **fig. 7**).

Fig. 5

Fig. 6

Fig. 7

Linear guide technology

To provide optimal solutions for all your guiding needs, our product range features shaft guidings, profile rail guides and precision rail guides.

Fig. 8

Fig. 9

Fig. 10

Linear ball bearings

Cost-effective, simple and self-aligning, Ewellix shaft guidings feature unlimited stroke, adjustable preload and excellent sealing performance. They are also available in corrosion-resistant versions and pre-mounted on an aluminium housing as a unit (↳ **fig. 8**).

Precision rail guides

With a range of modular options, Ewellix precision rail guides feature different rolling elements and cages. These guides feature high precision, high load carrying capacity and stiffness, and also come with an anti-creeping system. They are also available as a ready-to-mount kit (↳ **fig. 9**).

Profile rail guides

Featuring unlimited stroke through joint rails and excellent rigidity, capable of withstanding moment loads in all directions, Ewellix profile rail guides are ready to mount and provide easy maintenance along with high reliability. They are available in ball or roller versions as well as standard and miniature sizes
(↳ **fig. 10**).

Product overview

Linear actuators

Electromechanical linear actuators enable precise, controlled, and repeatable push/pull movements in linear drive applications. Linear actuators serve as efficient, virtually maintenance-free, and environmentally friendly alternatives to hydraulic or pneumatic types.

Actuators with a modular design and open architecture offer opportunities to choose and integrate components to achieve customized solutions within existing envelopes. Application potential expands with the introduction of technologies for specific purposes, such as hall sensors, limit switches, potentiometers, friction clutches, or back-up nuts.

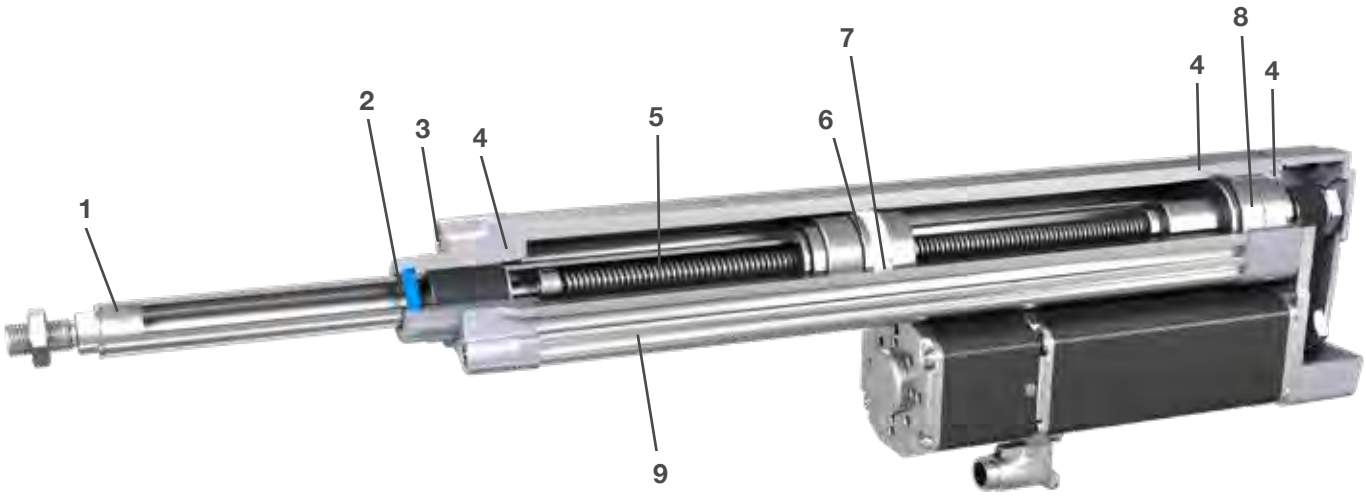

1. Push tube which moves the load
2. Shaft seal to protect against contaminants ingress
3. Opening to let the actuator breath (not visible)
4. Flat seal between housings
5. Screw with nut to transform rotative movement into linear movement
6. Magnet ring for proximity sensors to detect position
7. Anti-rotation device
8. Bearing to hold the load
9. Protection tube

Lead screw

Precision rolled ball screws

Roller screws

Screws

Ball and roller screws are key components to build electric cylinders. They transfer rotary movements of the motor into linear movements. Their efficiency and their load and speed capabilities have a very big influence on the performance of electric cylinders.

Thanks to decades of experience with manufacturing ball and roller screws and continuous product and process development, Ewellix builds electric cylinders with precision screw solutions that fulfill the most demanding applications in terms of efficiency, precision, durability and value. All screws are made of high-strength materials with specific heat-treatment.

Lead screw

These screws transmit torque into linear motion through direct sliding friction. A typical assembly consists of a steel screw and plastic nut. Some of the electric cylinders are equipped with lead screws with a relatively high friction coefficient that makes them well suited for self-locking application. Lead screw actuators accommodate high static force, withstand excessive vibration, operate quietly, and represent cost-effective solutions.

Precision rolled ball screws

Ewellix ball screw assemblies provide high performance solutions suitable for a wide range of applications where high loads, precision driving, durability and value are prerequisites.

High technology machinery associated with precise control of the cold forming and metallurgical processes enable the production of screws that offer virtually the same accuracy and performance of ground ball screws, but at a lower cost. Standard lead precision is G9, according to ISO 286-2:1988. Ewellix production meets G7 lead precision for screw shaft nominal diameter starting from 20 mm. On request, Ewellix can deliver ball screws with G5 lead precision, according to ISO 3408-3:2006, defined for positioning screws, and matching the lead precision of G5 ground ball screws.

Roller screws

Roller screws offer a performance level far beyond the capabilities of ball screws. Planetary roller screws are well suited for heavy loads, high duty, high rotational speed, high linear speed, high acceleration and rigidity, and for operation in harsh environments.

For very high precision applications, recirculating roller screws with a very fine lead of thread allow high positioning accuracy, repeatability and exceptional rigidity.

For applications where compactness and low weight are essential, Ewellix also offers fully integrated cylinders, built with inverted roller screws.

Product range comparison

Force and speed capabilities

The graph below (↳ **diagram 1**) provides a quick overview about the continuous force, peak load capabilities and the speed of the high performance actuators with servo motors. Use this graph to quickly evaluate which actuator could fit best in your application.

The continuous force describes the force the actuator can push or pull continuously without overheating. The peak load is the maximum force an actuator can push or pull for a short time (peak) at low speed, without being mechanically destroyed or by overheating.

The v_{max} is the maximum linear speed the actuator can reach without destroying the mechanical system. If the motor of the actuator could turn faster, it needs to be limited.

Diagram 1

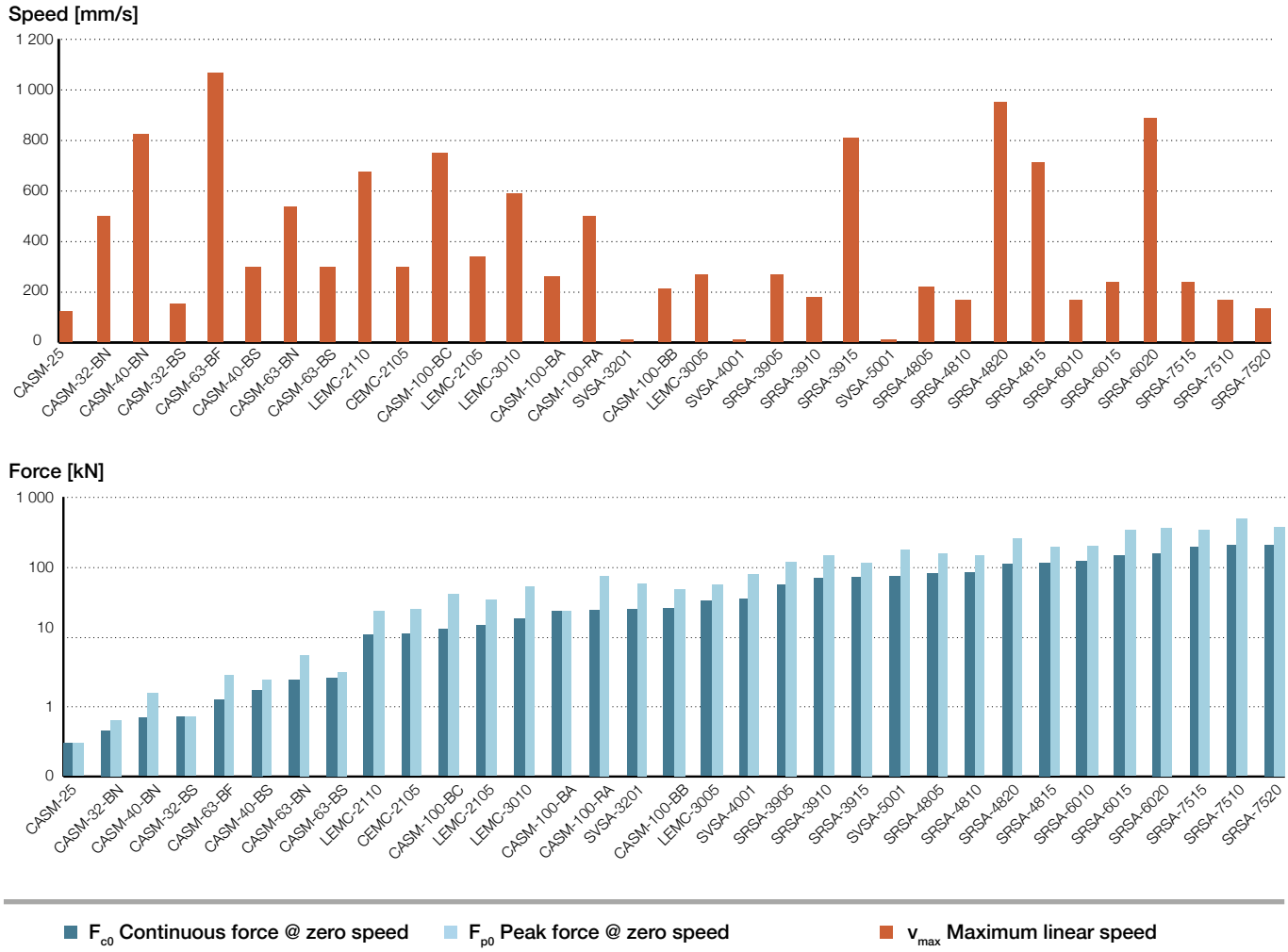

CASM-25 CASM-32/40/63		Electric cylinders with lead or ball screws for loads up to 5,4 kN or speeds up to 1 067 mm/s. These cylinders are equipped with brushless DC motors with integrated electronics or with servo motors for higher performance demands, in inline or parallel configuration.
CASM-100		Electric cylinders with ball and roller screws for an extended range of forces, up to 82 kN and speeds up to 890 mm/s. Several screw sizes, gearboxes and motors can be combined to provide a wide selection of performance levels.
LEMC		Electric cylinders with high performance roller screws for forces up to 80 kN or speeds up to 1 000 mm/s. LEMC cylinders are equipped with smart AC motors with bevel or parallel gearboxes or with servo motors in inline or parallel configuration for very high performance.
SRSA, SVSA, SLSA		For high loads up to 500 kN, Ewellix offers the SRSA range with high performance roller screws and servomotors. For improved positioning accuracy, the SVSA is equipped with a roller screw with 1 mm lead which can handle forces up to 175 kN. The high speed version SLSA has a large pitch screw and reaches speeds up to 1,5 m/s. All are available with inline or parallel motor.
CEMC		Compact electric cylinders CEMC for highest performance among the cylinders listed here? Need to define what group you are considering, but low weight. The fully integrated actuators are equipped with hollow shaft motor and inverted roller screws and are built for loads up to 25 kN. The perfect choice for weight sensitive robot arm applications.

Linear units

Linear unit	Maximum dynamic axial force F_{max}	Maximum linear speed v_{max}	Dynamic load capacity C	Screw type	Screw diameter	Ref page
	kN	mm/s	kN	–	mm	–
CASM-25	0,3	300	2	Ball screw	8-2,5	61
CASM-32/40/63	5,4	1 067	21	Lead screw/ Ball screw	9–20 10–20	74
CASM-100	82	890	106	Ball screw/ Roller screw	32–40 30	144
LEMC	80	1 000	122	Roller screw	21–30	180
SRSA	500	1 111	572	Roller screw	39–75	236
SVSA	175	10,4	174,2	Roller screw	32–50	244

Actuators

Actuator family	Continuous force @ zero speed F_{c0}	Peak force @ zero speed F_{p0}	Maximum linear speed V_{max}	Maximum stroke S_{max}	Motor type	Ref page
	kN		mm/s	mm	–	–
CASM-25	0,3	0,3	125	50	Servo motor	62
CASM-32/40/63	2,4	5,4	1 060	800	BLDC motor/Servo motor	82
CASM-100	25,6	75,5	750	2 000	AC mtor/Servo motor	150
LEMC	50,7	69	680	800	AC motor/Servo motor	186
CEMC	18,4	25	300	180	Servo motor on inverted roller screw	220
SRSA	208,1	490	950	1 500	Servo motor	248
SVSA	74,6	174	10	900	Servo motor	264

How to read a performance diagram

Actuators withIn the product range chapter, a technical description is available for each actuator family. This includes performance overview, a detailed product description and motors and adapters information. In addition to that, each actuator type and size has dedicated tables with the main technical data. In particular the performance of each complete actuator is described through diagrams.

Below is a general description of how to read the axial force / linear speed diagram.

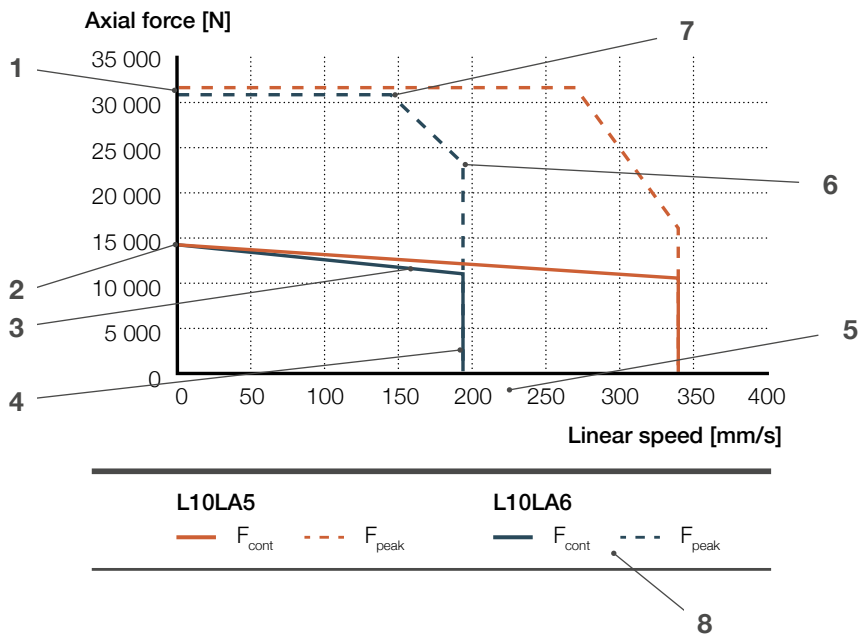

1. Peak force at zero speed. This is typically the highest peak force of a servo motor (F_{p0})
2. Continuous force at zero speed. This is typically the highest continuous force of a servo motor (F_{c0})
3. The continuous force of a servo actuator is typically decreasing when speed is increasing
4. Continuous force of the servo actuator at maximum speed (F_c)
5. Maximum speed of the servo actuator
6. Peak force of the servo actuator at maximum speed (F_p)
7. Maximum speed of the servo actuator at maximum peak force
8. A different colour means the same linear unit but a different motor/ gearbox combination

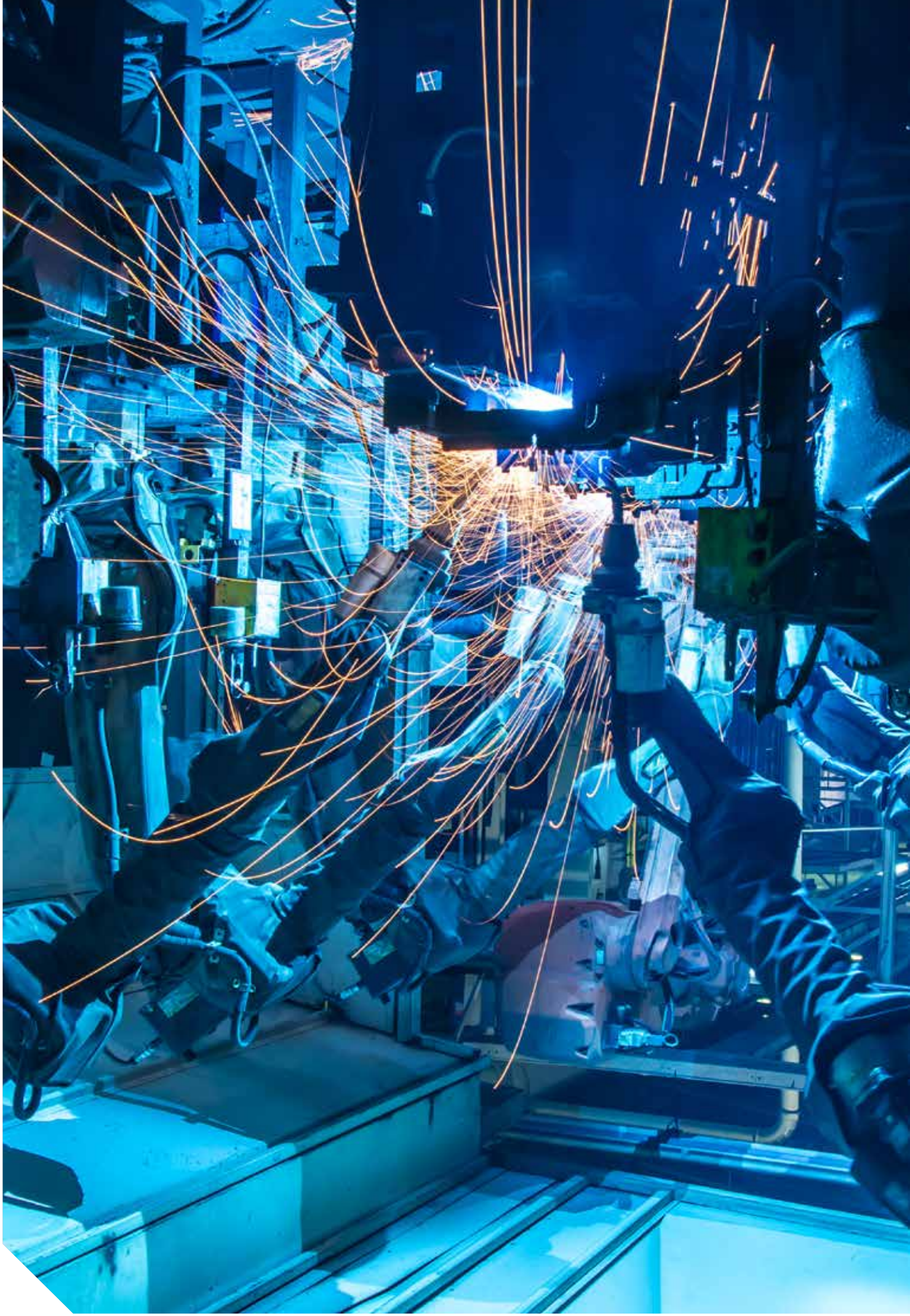

Product benefits of electric cylinders over pneumatic and hydraulic cylinders

Linear movements in modern applications place high demand on travel profiles. Pneumatic and hydraulic cylinders quickly reach their system performance limits while Ewellix electric cylinders offer improved performance and simpler setup in applications that were traditionally served by pneumatic and hydraulic cylinders.

Performance

Controllability and positioning precision

The compressibility of air provides limitations on the level of control that can be achieved with pneumatic actuators. It's also difficult to provide the slow, controlled speeds that are needed in certain applications. With hydraulics, the situation improves, but to control in multiple positions, still requires a complex servo-hydraulic configuration that increases the cost and setup time of the overall system.

Electromechanical actuators have a direct mechanical link between the motor and the screw that provides complete controllability of the system, with high levels of repeatability, down to the micron level as well as higher stiffness. Moreover, it's very easy to precisely change the speed along the motion cycle. Finally, for electromechanical systems, there is no warm up time, increasing the productivity of the machine (↳ **table 1**).

Weight

Pneumatic cylinders by themselves are lightweight devices, but if we consider other components like hoses, valves, air filter and so on, the overall system weight increases. The same concept applies to hydraulics.

Electromechanical actuators have a higher weight if just compared to an equivalent fluid power cylinder, but are significantly lighter once the overall system is considered (↳ **table 2**).

Pneumatic | Hydraulic | Electromechanical

Table 1

	Pneumatic	Hydraulic	Electromechanical
Positioning precision	Low	Medium	High
Controlled speed	Difficult	Possible, but complex	Easy
Warm up time	Needed	Needed	Not needed

Table 2

	Pneumatic	Hydraulic	Electromechanical
Cylinder weight	Low	Low	High
Overall system weight	High	High	Low

Power density

Pneumatic cylinder force capacity is heavily limited by the maximum pressure (usually up to 10 bars) that can be achieved and by the related energy losses due to air compression. This means that to generate high forces, big cylinder diameters and pressure levels are needed. And forces are usually limited to 30 kN for a size 200 cylinder. Electromechanical cylinders can provide much higher forces compared to a pneumatic cylinder with the same section size, with a power density up to 8 times higher. Hydraulic cylinders can have an even higher power density but they need more installation space in the machine due to tubes and hoses. Electromechanical cylinders just use power cables for operation, requiring a smaller space (↳ **table 3**).

High speed performance

With pneumatic cylinders, it is easy to reach very high speeds in operation. With hydraulics, a large flow is needed to meet the same goal, but there must be enough pressurized oil in the system to reach the required flow level. For hydraulics an accumulator can do the job by holding the pressurized volume, deploying additional capacity when needed. In any event, this means a more complex and costly hydraulic system setup that can lead to very high power consumption. With electromechanical cylinders, it is easy to match the application needs by selecting the best combination of screw lead and motor rotational speed, which optimizes the power consumption without any added system complexity (↳ **table 4**).

Reliability and lifetime

Electromechanical actuators have more components than a generic pneumatic or hydraulic cylinder. Thus, such a fluid power system has many more critical parts (compressor, filter/regulator, valves, seals, hoses….etc.). If these components have issues, it will affect the entire system, leading to machine downtime. This fluid power system is also very contamination sensitive and requires efficient filters that need to be serviced over time. With electromechanical systems, the most common points of failure are the screw or the bearings. These components have L_{10} life ratings, which can be calculated based on the life equations typically found in the Ewellix catalogs. This greatly helps in selecting the correct product sizing, and facilitating predictive maintenance operations. Moreover, electromechanical actuators are less sensitive to contaminants as they do not have a complete circuit constantly under pressure (with several parts subject to wear) (↳ **table 5**).

Table 3

Force	Up to 30 kN	> 500 kN	Up to 500 kN
Cylinder dimension vs force	1	< 1/8	Up to 1/8
Installation space	Big	Big	Small

Table 4

High speed	Very Easy	Difficult	Easy
Power consumption	High	High	Low

Table 5

System complexity	High	High	Low
Predictive maintenance	Possible	Possible	Easy
Contamination sensitivity	High	High	Low

Safety/Environment

Safety

Hydraulic cylinders usually work with very high pressures (up to 350 bars) and represent a potential hazard for personnel working around the system, due to pinhole leaks and improper couplings. Moreover, if mineral oil is used, there is a potential fire hazard. For pneumatics, the situation improves but the stored energy can still be a danger during maintenance checks or unexpected system shutdowns. It is possible to minimize such risks with these systems by using relief and bleed valves, non-combustible fluid, automatic fire alarm systems and dedicated safety procedures for inspection and maintenance. However, doing so dramatically raises the overall cost and complexity of the system.
Electromechanical actuators do not have fluid under pressure and therefore are safer during operation. By eliminating the motor power, the overall system is de-energized and can more easily be safely managed. By using self-locking actuators or an external fail safe brake, it's also possible to further increase the safety level of the equipment during service (↳ **table 6**).

Table 6

Potential hazard	Medium	High	Low
Safety in operation	Complex	Complex	Very easy

Energy savings

Pressure losses and air compressibility make pneumatics less efficient than other linear motion methods. Hydraulics have better efficiency but still experience several losses in the conversion between pressure generation and linear movement. In both cases, a compressor must run continuously, creating pressure even if there is no movement. Electromechanical systems use energy on demand so they consume close to zero energy while not in use. Their higher efficiency in converting electricity into mechanical power allows them to achieve tangible energy savings in operation (↳ **table 7**).

Table 7

Consumption while not in use	Medium	High	Close to zero

Noise

Pressure pulsation, created by the operation of pumps in a fluid power system, is one of the primary causes of noise issues for this technology. But other components like valves and compressors are also contributing to noise generation. Electromechanical systems are generating noise primarily from the screw movement. Therefore, noise is generated only when the actuator is in use. Moreover, the overall level is usually negligible when compared to a fluid powered system (↳ **table 8**).

Table 8

Cylinder noise level	Medium	Low	Low
System noise level	Very high	Very high	Null

Environmental

Air can be contaminated by oil or other impurities, and needs to be filtered to avoid environmental pollution. Also, leakages and disposal of hydraulic oil represent a significant environmental issue and potential source of pollution. The energy losses on the whole system, especially hydraulic, can cause ambient overheating that then has to be evacuated, causing extra energy waste for the cooling system. Electromechanical systems use grease as lubricant that is fully contained inside the actuator body. The quantity used is small and doesn't represent a significant source of pollution. Electromechanical actuators also generate heat but at a
negligible level compared to hydraulic, thus being much more efficient (↳ **table 9**).

Table 9

Environmental pollution risk	Medium	High	None
Heat generation	Medium	High	Low

Efficiency: Energy losses comparison

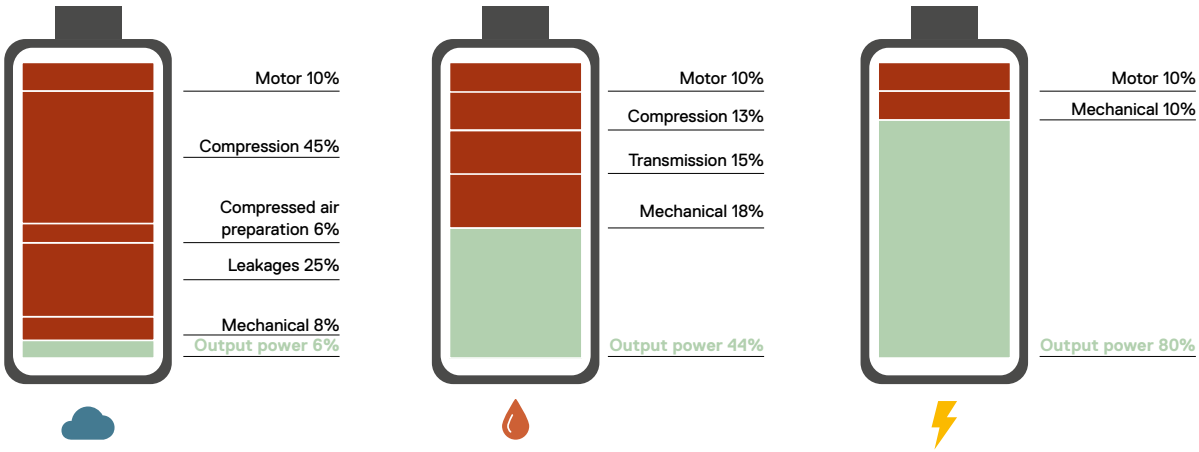

Simplicity

Installation

Pneumatic systems require many components, including hoses, pumps, valves, regulators, lubricators, and air filters. Hydraulic systems, as well, require a complex setup including a fluid reservoir, pumps, motors, release valves, heat exchangers, along with noise-reduction equipment. This means the commissioning time is long since several parts of the system must be fine-tuned. Electromechanical systems only require a motor, electric cables and, depending on the motor type, a driver. This allows a much smaller system footprint and a simple mechanical layout, reducing significantly the installation and commissioning time of the equipment (↳ **table 9**).

Table 9

Footprint	Large	Large	Very small
System commissioning time	Very long	Very long	Short

Maintenance

Fluid powered systems require constant maintenance to achieve overall system efficiency, avoiding leaks and failures. The filtering system, valves, pipes and fittings should be monitored and serviced to improve cylinder performance over time. Moreover, manual inspection operations are required to check the system status and spot possible issues. Electromechanical actuators can be operated virtually without maintenance for their whole lifetime or, depending on the working cycle and application, may just require a relubrication operation at defined intervals. It's also possible to perform predictive maintenance strategies thanks to the integrated sensors (like current, displacement, force, acceleration) that allow real-time remote monitoring and that can be and that also can forecast product lifetime in operation (↳ **table 10**).

Table 10

Maintenance	Constant	Constant	Not required / seldom
Cost of maintenance	High	High	Very low
Remote monitoring	Possible	Possible	Easy

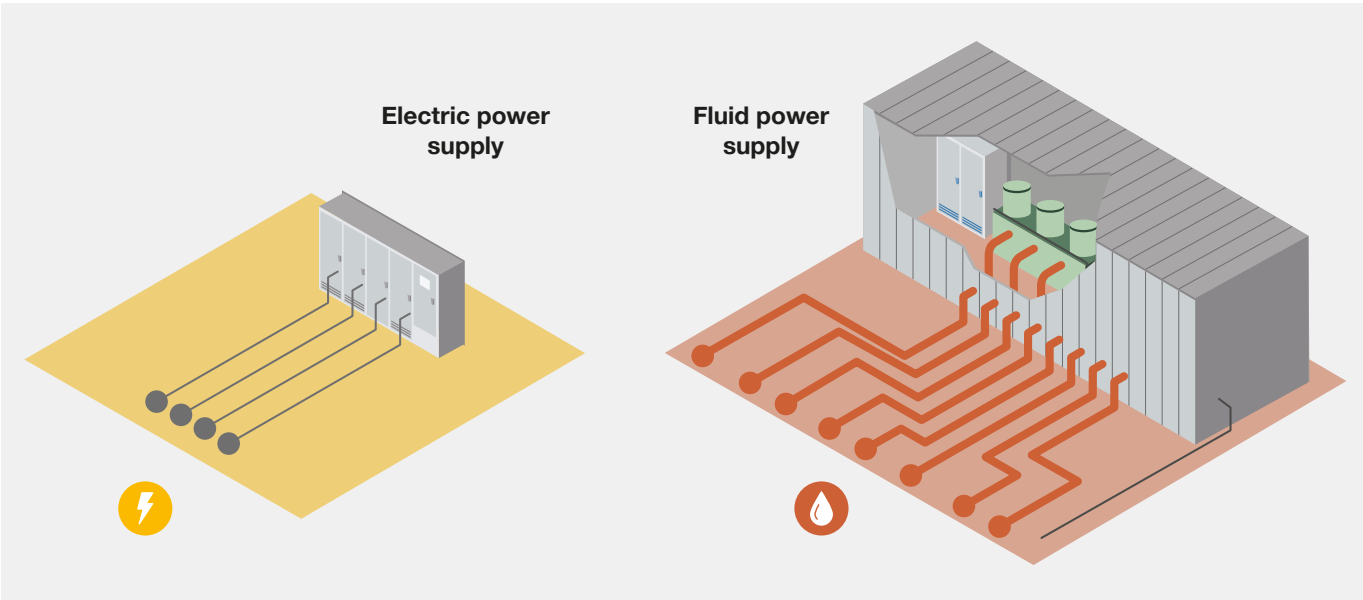

Quicker replacement

Replacing components in a fluid power system requires depresurization, oil disposal (in the case of hydraulics), part substitution and recalibration to get back into operation. This requires a defined amount of time with specialized service personnel. Electromechanical actuators can be quickly replaced by disconnecting the cables and substituting the current actuator with a new one. No further action is required to restart operation (↳ **table 11**).

Table 11

Time of replacement	Long	Long	Very short
Specialized service personnel	Required	Required	Not necessary
Maintenance downtime	Longer	Longer	Very short

Design

When designing a fluid powered system, it's important to correctly place the numerous components and to accurately define the right route for the pipes and hoses, creating constraints in the machine layout. Depending on the number of cylinders, the distance between them and the overall machine layout, the design phase can take some time as the designer also has to consider a simple installation and maintenance process. With electromechanical systems, the design process is lean thanks to the use of few components and electric cables only, thus allowing a more flexible routing and installation (↳ **table 12**).

Table 12

Design time	Long	Long	Short
Project constraints	Significant	Significant	Less

Electromechanical layout

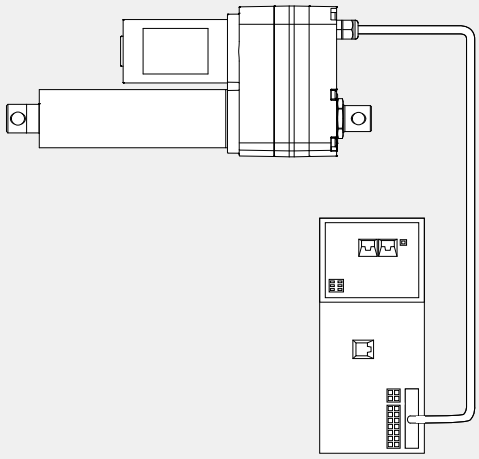

Pneumatic layout

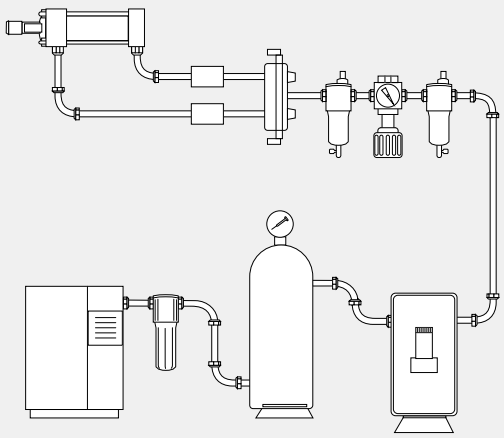

Hydraulic layout

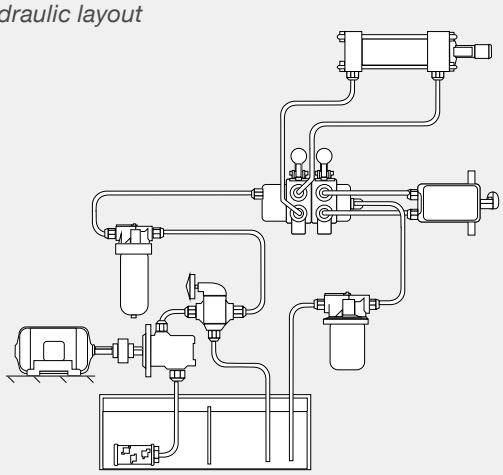

Total cost of ownership

The evolution in continuous industrial processes is becoming more demanding in terms of motion control performance. The current pneumatics and hydraulics solutions are not competitive in terms of TCO (Total Cost of Ownership) that considers all direct and indirect costs associated with an asset over its entire life cycle. Beside the more obvious performance advantages, there are several others hidden behind the technology or with usual production and factory processes. For example, a higher system efficiency - both in operation or in standby mode - lead to direct savings proportional to the number of cylinders, in monthly and yearly energy expenses. Concerning costs related to machine downtime and maintenance operation, a system with less components, less sensitivity to re-lubrication needs, easier to be serviced and with a quicker replacement time can provide tangible savings in different accounting areas of the factory. Moreover, less components mean less of a need for spare parts and so a lower capital investment in parts. Another hidden cost concerns safety and hazard prevention devices and procedures. A system with an embedded higher safety level can help to reduce the cost of running a safe manufacturing operation. Moreover, removing the oil from some areas of the plant helps to reduce costs related to oil cleaning and disposal.

Cost saving calculator

Ewellix has developed a tool to support customers in evaluating the cost of running their machinery comparing the use of pneumatic, hydraulic or electromechanical technologies. By inserting some basic information into the tool, the user can get an estimation of the cost savings achievable by switching to mechatronic solutions.

↳ Visit ewellix/actuator-select in the cost saving calculator section to get started

Hidden cost

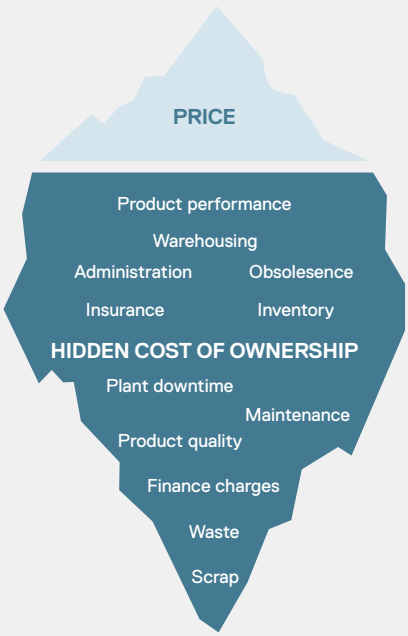

Customization capabilities

Ewellix electric cylinder customization

On the standard electric cylinder product range, Ewellix offers an extensive customization program that is able to meet virtually any application need. There are 3 levels of customization that depend on specific requirements and the complexity of implementation.

Basic customization

These basic design options can be implemented quickly and easily:

- Stroke
- Mounting holes
- Colors
- Attachments
- Motor
- Cables / connectors

Advanced customization

These design options are more complex and require a dedicated project by Ewellix personnel working with the customer:

- Materials
- Housing
- Guiding system
- Gearbox (e.g., with hand crank)
- Screw (e.g., lead, treatments)
- Screw Nut (e.g., additional backup nut)
- Painting and surface treatments

Complete customization

In case the standard actuator offering cannot fully satisfy the technical requirements, Ewellix can offer completely customized solutions that are tailor made for each customer.

Examples of basic and advanced customizations

Electric cylinder CASM with spring around the push tube

An electric cylinder CASM (↳ **fig. 1**) has to move a high constant load. To relieve the cylinder's motor and screw from this high load, Ewellix added a spring around the push tube. Most of the constant load is carried by this spring. The motor and the screw are mainly used to accelerate and decelerate the load while moving. This customization increases the cylinder's service life significantly and enables the use of a smaller motor system.

Electric cylinder CASM made of stainless steel

The electric cylinder CASMS (↳ **fig. 2**) are often used in food and beverage applications. For direct contact with food, Ewellix made a customized version of the CASM in stainless steel, according to the EHEDG Doc 8 guidelines. This cylinder has a rounded, smooth surface with no area for food or bacteria accumulation. The seals are made of H-Ecopur/FDA. The stainless steel cylinder is resistant to food industry chemicals and solvents and is high pressure washable.

Electric cylinder LEMC with customized attachment

The electric cylinders LEMC (↳ **fig. 3**) are modular in design, which enables quick modifications. In this special case, the LEMC is equipped with a customized trunnion flange to perfectly fit into the customer's application.

Electric cylinder CASM for harsh environments and low temperatures

Electric cylinders CASM are built and tested for IP54S applications (↳ **fig. 4**). To operate CASM in wet and dusty environments, they are prepared to connect a pneumatic hose. With the hoses open end in a dry place, the CASM can breathe dry air during operation. This eliminates the under pressure while extending the push tube and prevents the entry of dust and humidity into the cylinder. In applications with low temperatures (↳ **fig. 5**), the standard grease of electric cylinders starts to thicken and the lubrication effect is reduced. With a special low temperature grease, this thickening can be eliminated and the cylinders can run smoothly even in very cold environments.

Fig. 1

Fig. 2

Fig. 3

Fig. 4

Fig. 5

Examples of complete customizations

Electric cylinder with very long stroke length (3 100 mm)

An application on water gates (↳ **fig. 6**) in a hydro power station in Sweden required the replacement a hydraulic cylinder to get rid of the oli leakage risk and improve the uptime in the field.
The solution (↳ **fig. 7**) developed has achieved the long stroke (3 100 mm) and high load requirements, ensuring a reliable operation in a harsh environment.

Electric cylinder for parallel running

The application (↳ **fig. 8**) required high accuracy, high stiffness, special environmental demands and a load capacity up to 160 kN. The design ended up in a parallel system with customized gear boxes, robust sealing solution, roller screws, servo motor and redundant brake system.

Electric cylinder for height adjustment on working platform

The requirements were to find an electromechanical solution that had a stroke of 300 mm, max load capacity of 70 kN and a maximum weight of 50 kg. The design solution (↳ **fig. 9**) was an actuator with a roller screw, planetary gear and an ultra-compact servo motor. This solution provided a dynamic load capacity of 72 kN, a total weight of 42 kg and a design adapted for harsh environment.

Electric cylinder adjusting airflow into combustion chamber for a gas turbine

The function “Inlet Guide Vane” (IGV) for a gas turbine was previously operated by a hydraulic cylinder. But higher demands on controllability and safety required an electromechanical servo solution, specifically designed for that equipment. The solution (↳ **fig. 10**) also included, besides the electric cylinder, a customized Factory Acceptance Test (FAT) and specific documentation package delivered with each product.

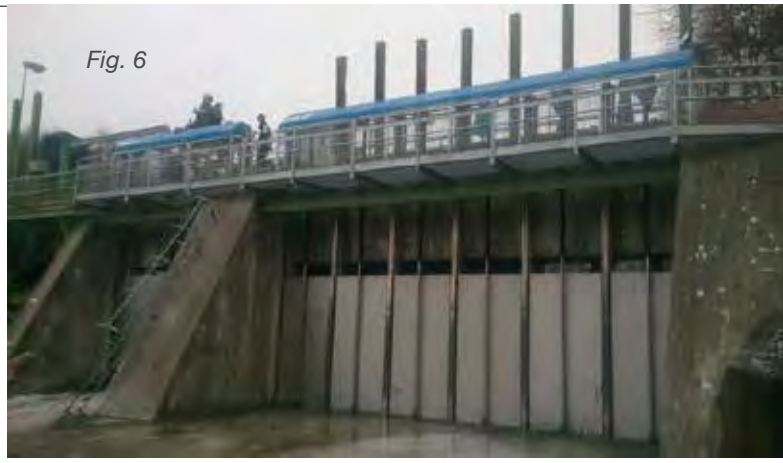

Fig. 6

Fig. 7

Fig. 8

Fig. 9

Fig. 10

Fig. 11

High speed cylinder for testing equipment

Hexapods and simulators are highly demanding in speed level and dynamic. The Ewellix SxSA can be customized and equipped with a long lead ball screw (with 25 up to 50 mm pitch) to fulfill high speed needs up to 1.6 m/s. Benefit is to use same actuator body than the roller screw range of SxSA, for a modularity approach.

Hexapods shown (↳ **fig. 11**) were designed to simulate in a lab the sea wave kinematic for testing purpose of tanks used on boats.

Electric cylinder LEMC with recirculating roller screw

The modular LEMC actuators might be customized with different types of screws to satisfy specific performance requirements (↳ **fig. 12**).
On a test rig application for material resistance and deformation analysis, it was required to achieve high stiffness and high movement resolution in terms of small linear displacement per motor turn.

By using Ewellix preloaded recirculating roller screw PVU 32 × 1 coupled with a planetary gearbox, it was possible to obtain high pressing forces, high positioning precision and controllability to easily handle micrometric displacements in the application.

Fig. 12

Telescopic electric cylinder

For the steel industry segment, to fit into space availability and required output power, Ewellix has designed telescopic ball screw actuators used to adjust mould and bloom size on continuous casting (↳ **fig. 13**). Two ball screws coupled with worm gears are used to realize the movement while a stainless steel body and special sealing material are protecting the actuator from the harsh working environment (high temperatures, steel particles…). The telescopic design enables a longer stroke for the same retracted length, so that a wider product range can be manufactured using the existing casting line. By improving the mould displacement controllability, telescopic actuators also make it possible to increase the slab quality.

Fig. 13

Extreme power SRSA electric cylinder

For a heavy steel application, Ewellix has realized a customized SRSA cylinder with cutting edge performance to replace hydraulics (↳ **fig. 14**), boosted actuator dynamic capacity (+25%) thanks to a special bearing arrangement and ultra power roller screw size 75 with increased load capacity, long stroke (1 700 mm) and integrated torque limiter between motor and actuator. Moreover, an integrated Profibus absolute multi-turn encoder is mounted on a roller screw to identify actuator position even if the torque limiter has been activated. The actuator is capable of moving up to 110 kN with its 30 kW asynchronous motor and has an overall weight of 1,3 tons and a length of 6 meters in a fully extended position.

Fig. 14

Customization request form

Please fill in this application information sheet and return it to your local sales representative

Company: ……
Tel.: ……

Name of representative: ……
Email: ……

Application

Industry/Segment*: …… Machine/application name*: ……

Actuator function description:

Dimensions

Type:	O Linear actuator	O Telescopic pillar	
Stroke length*:	……. mm		
Retracted length:	……. mm		
Front attachment*:	O Fork head	O Male thread	O Rod end
	O Rod with hole	O Other	
Rear attachment*:	O Front plate	O Back plate	O Front trunnions
	O Rear trunnions	O Rod with hole	O Other
Mounting:	O Vertical	O Horizontal	O Diagonal
Actuator configuration:	O Inline	O Parallel	O L-configuration

Performance

Max force*:	……. kN			
Mean force:	……. kN			
Force profile:	fill in the table on **page 2**			
Max bending moment (only for pillars):	…….Nm			
Force direction:	O Pull	O Push	O Both	
Max linear speed*:	……. mm/s	at force: ……. kN		
Static load capacity:	Pull: ……. kN	Push: ……. kN	at max. stroke: ……. mm	
Lateral (side) force:	O No	O Yes	if Yes: …….. kN	
Self-locking:	O None	O In & Out	O In	O Out
Number of work cycles:	……. cycles/hour	……. hours/day	……. days/year	……. years
Duty factor:	…….. %	at load: ……. kN		

Motor

Motor type*:	O DC	O AC	O no motor
Motor voltage:	……. V		
Control mode (Command):	O Analog	O Digital	O Field bus
Manual emergency operation:	O No	O Yes	

* Mandatory fields

Miscellaneous

Feedback*:	O None	O Limit swiches	O Potentiometer	O Encoder
IP Protection:	IP …….			
Ambient temperature*:	Lowest …….	Highest …….		
Atmospheric / chemical influence*:	O Indoor	O Outdoor	O Actuator is protected from rain	
Humidity:	……. %			
Vibrations:	O No	O Yes	If yes Amplitude: ……. mm Frequency: …….. Hz	
Max. noise:	……. dBa (distance 1 m)			
Back-up nut:	O No	O Yes		
Friction clutch:	O No	O Yes		
Quantity needed:	Prototype ……. pcs	Pre-series……. pcs	Series……. pcs	

Force profile description

Step description	Move mm	Mean force kN	Speed mm/s	Moving time s
Forth				
Step 1				
Step 2				
Step 3				
Step 4				
Step 5				
Step 6				
Back				
Step 7				
Step 8				
Step 9				
Step 10				
Step 11				
Step 12				

Other customer requirements that cannot be defined above:

Application examples

Material handling – Conveyor systems

The high controllability, constant force and accurate positioning capabilities of electric cylinders make them an ideal choice for diverting and sorting applications on conveyor lines.

Conveyor lines are often distributed over a larger area. Bus communication of the electric cylinders simplify the wiring and is also perfectly suited to visualize and control the full system over a larger distance.

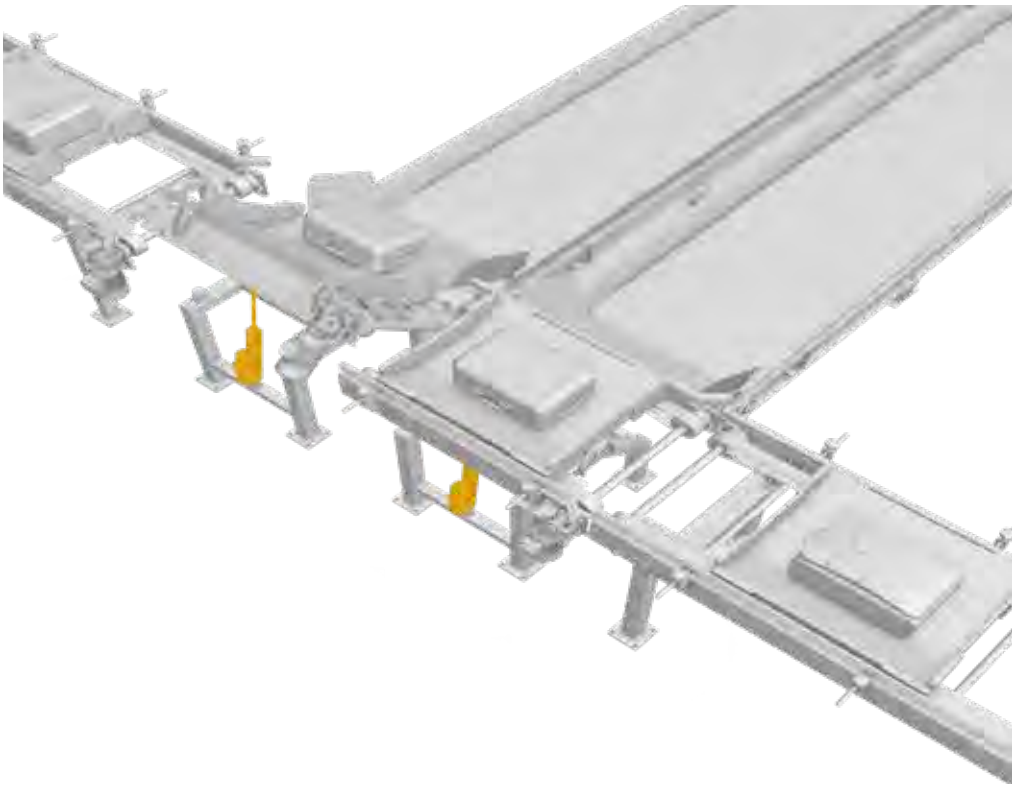

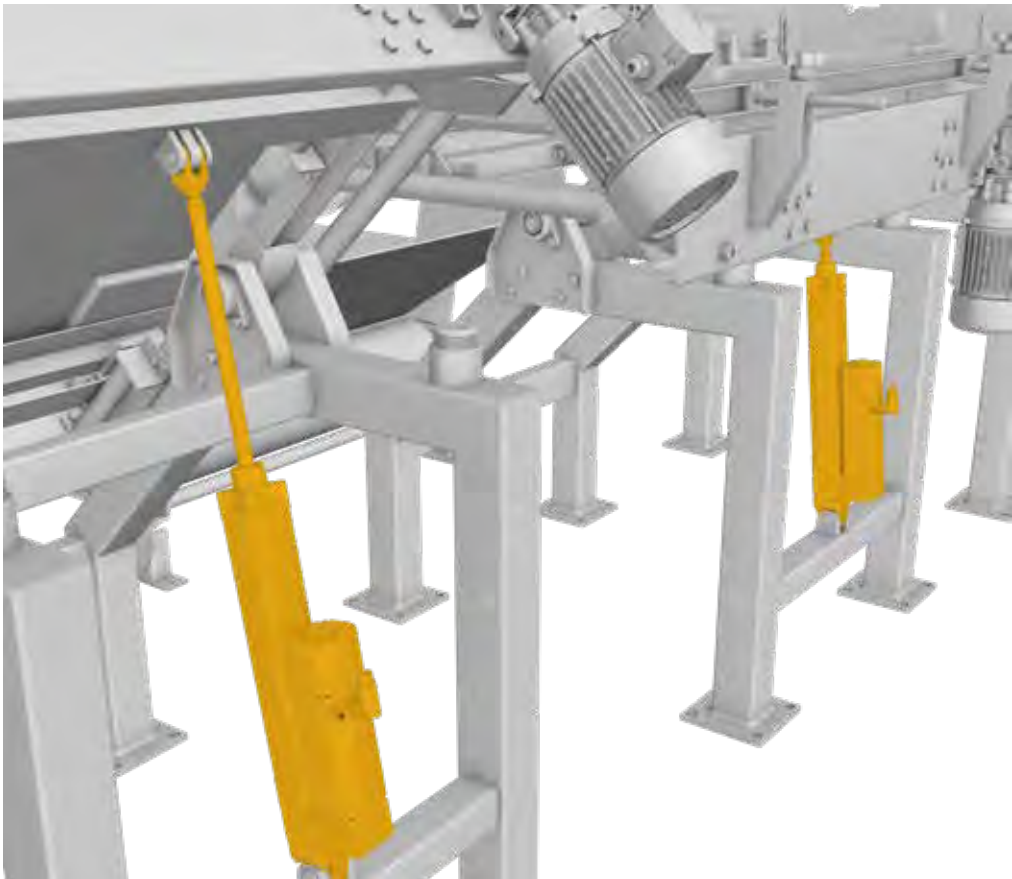

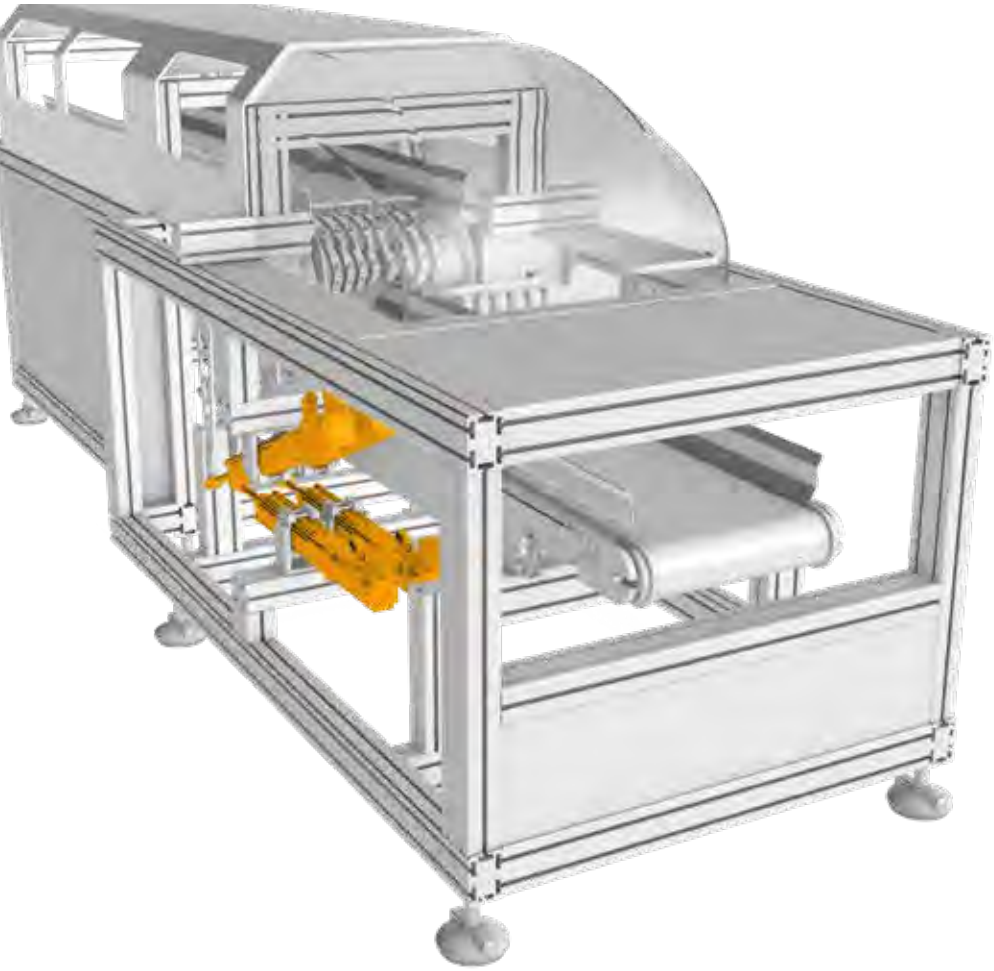

Food and beverage – Slicing of meat

The high controllability and accurate positioning of electric cylinders enables fast knife adjustments and extreme precision in meat slicing machines.

Fully automated cutting machines individually measure the meat and cut it. Quick adjustments of the knives enable users to increase the speed of the conveyor and therefore the productivity of the cutting line with improved continuity.

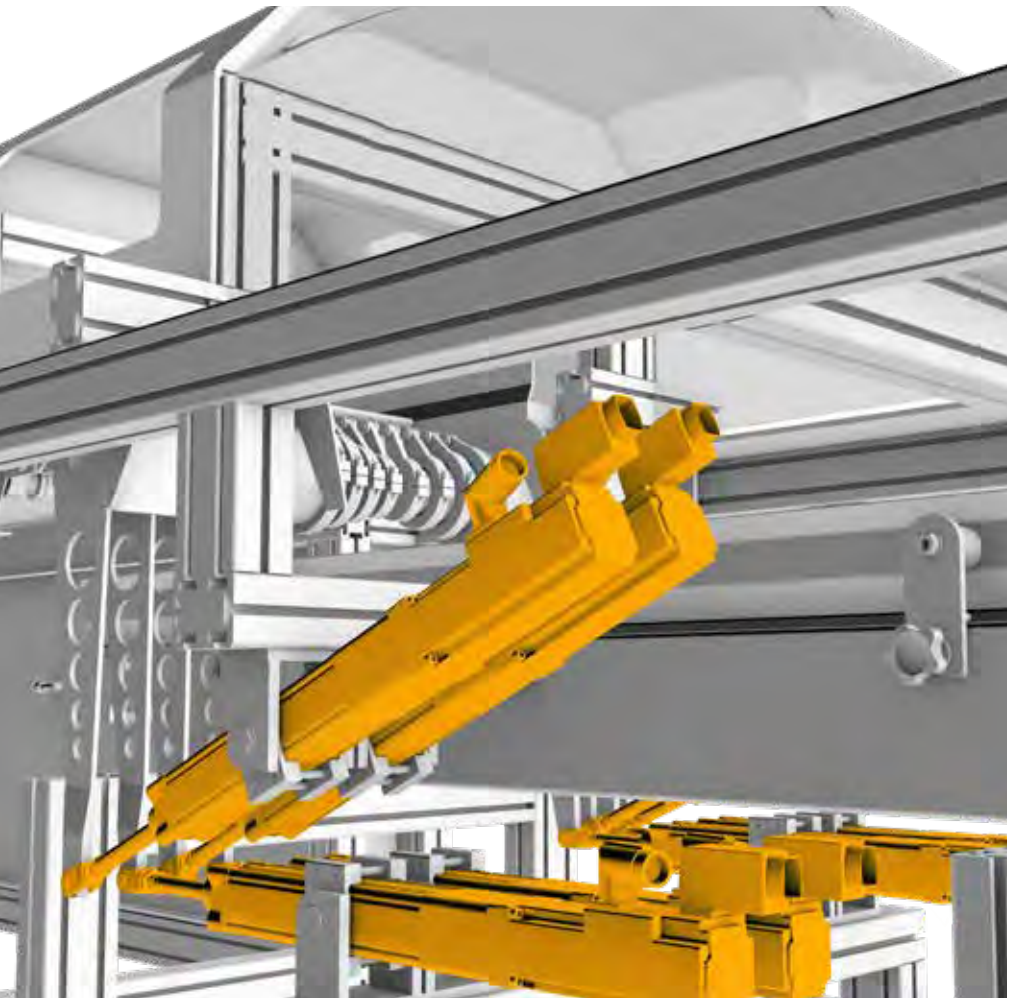

Material joining equipment – Gluing machines

Gluing robots with electric cylinders deliver a constant amount of glue which can be adjusted relative to the speed of the robot arm and the viscosity of the glue.

Gluing robots are used in many industries from sinks and windows to machine and automobile parts. Gluing robots help to reduce the cycle time and improve the quality of the products. You can help to ensure consistent quality, optimize operation time and reduce production cost by using electric cylinders in dosage applications.

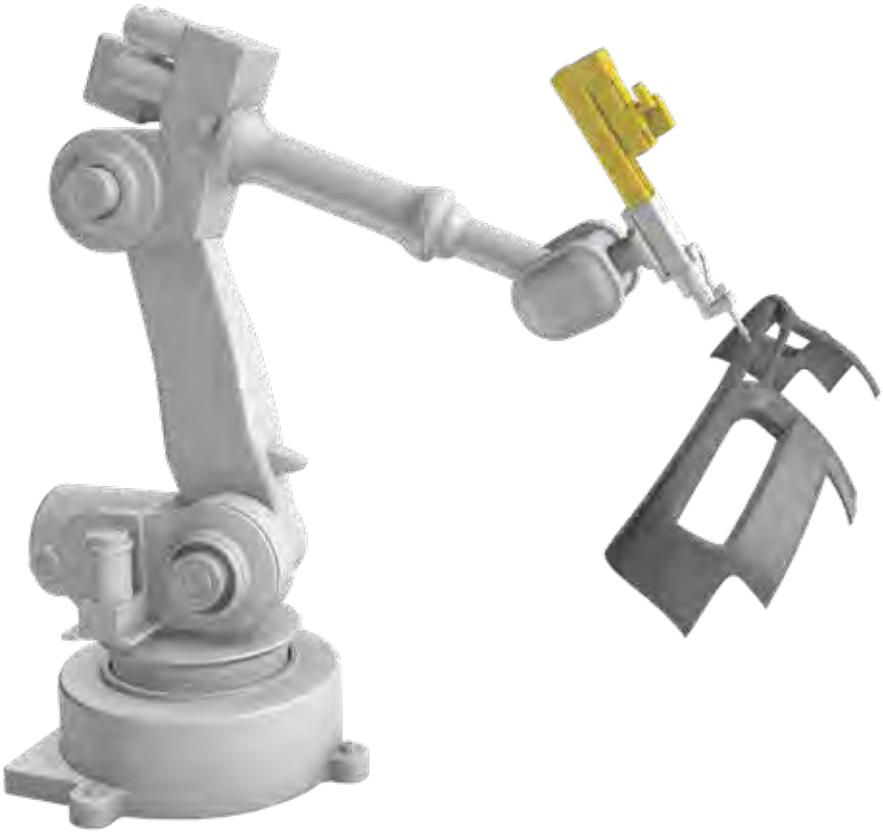

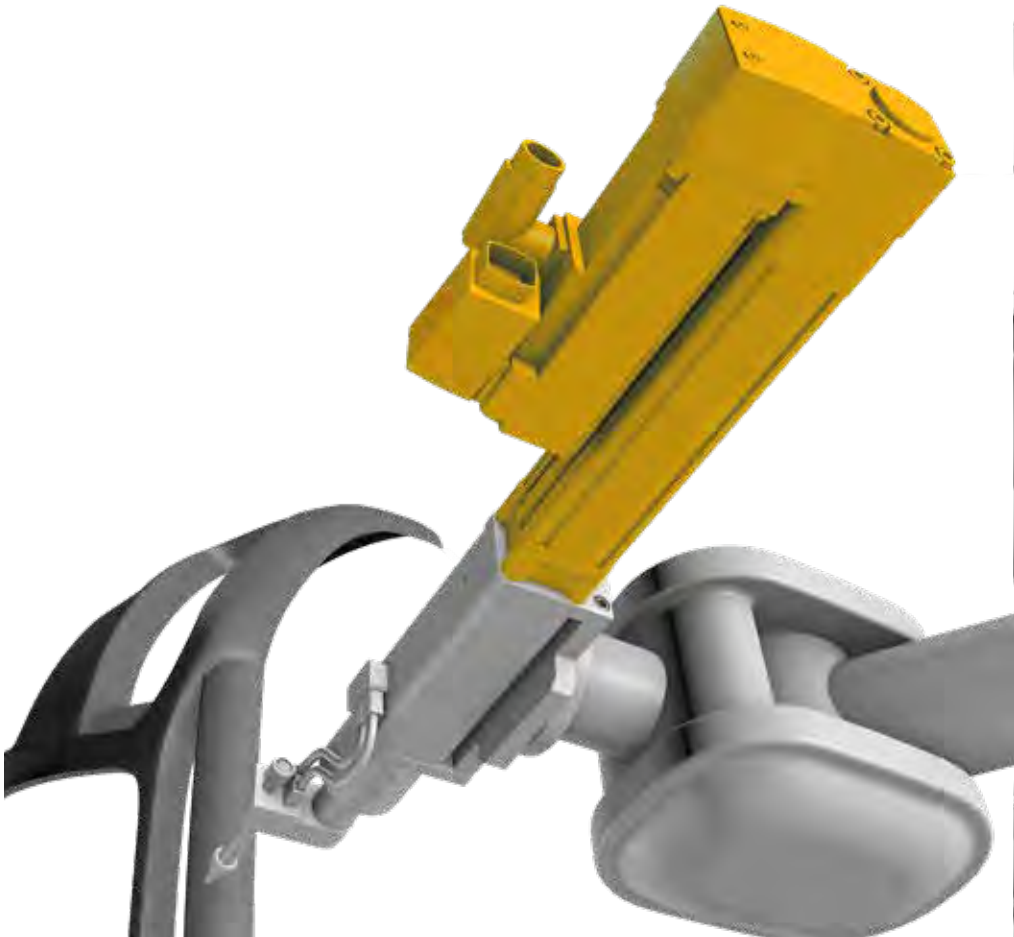

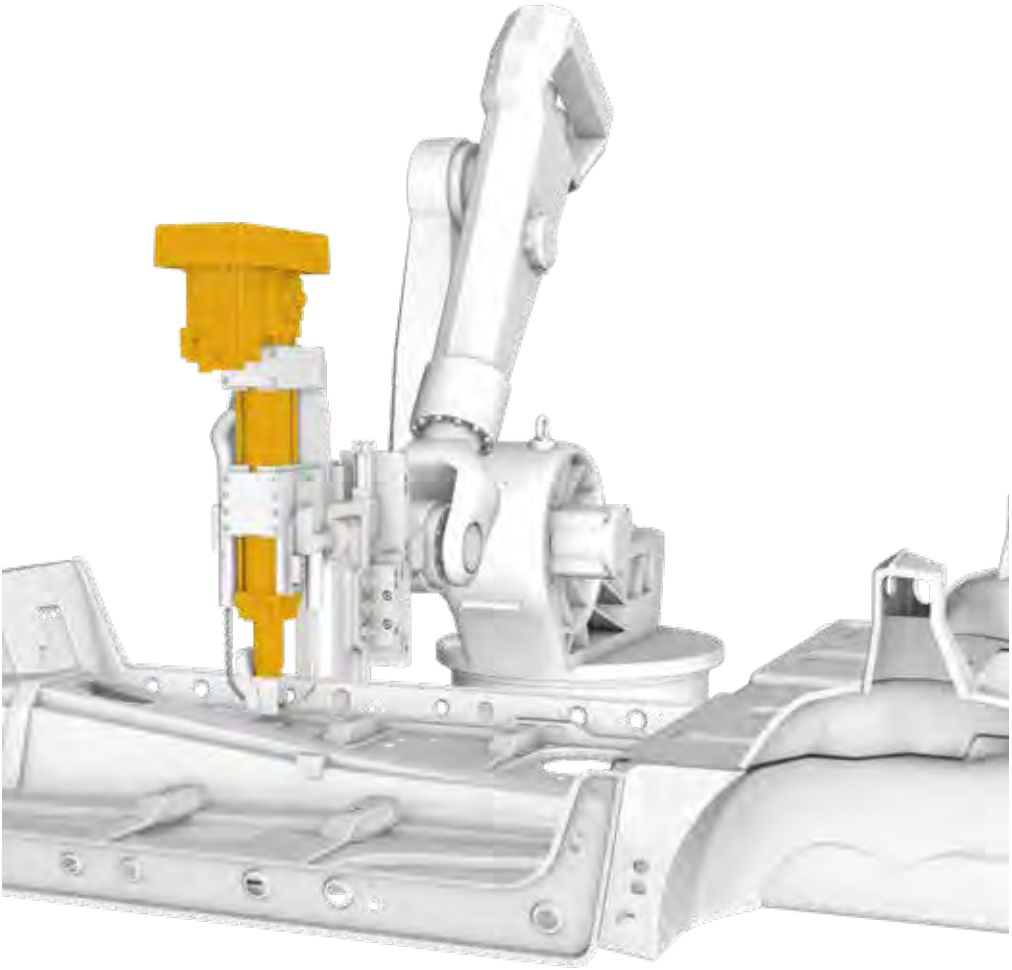

Material joining equipment – Riveting

Electric cylinders deliver continuous high quality rivets, enabling the use of fewer rivets with no compromise in strength, thereby boosting production line output.

The integrated roller screw technology increases the riveting speed and therefore productivity. The compact lightweight actuator is ideally suited for robot operated technology.

In addition, electric cylinders are highly dynamic and very efficient which saves a lot of energy and operating cost.

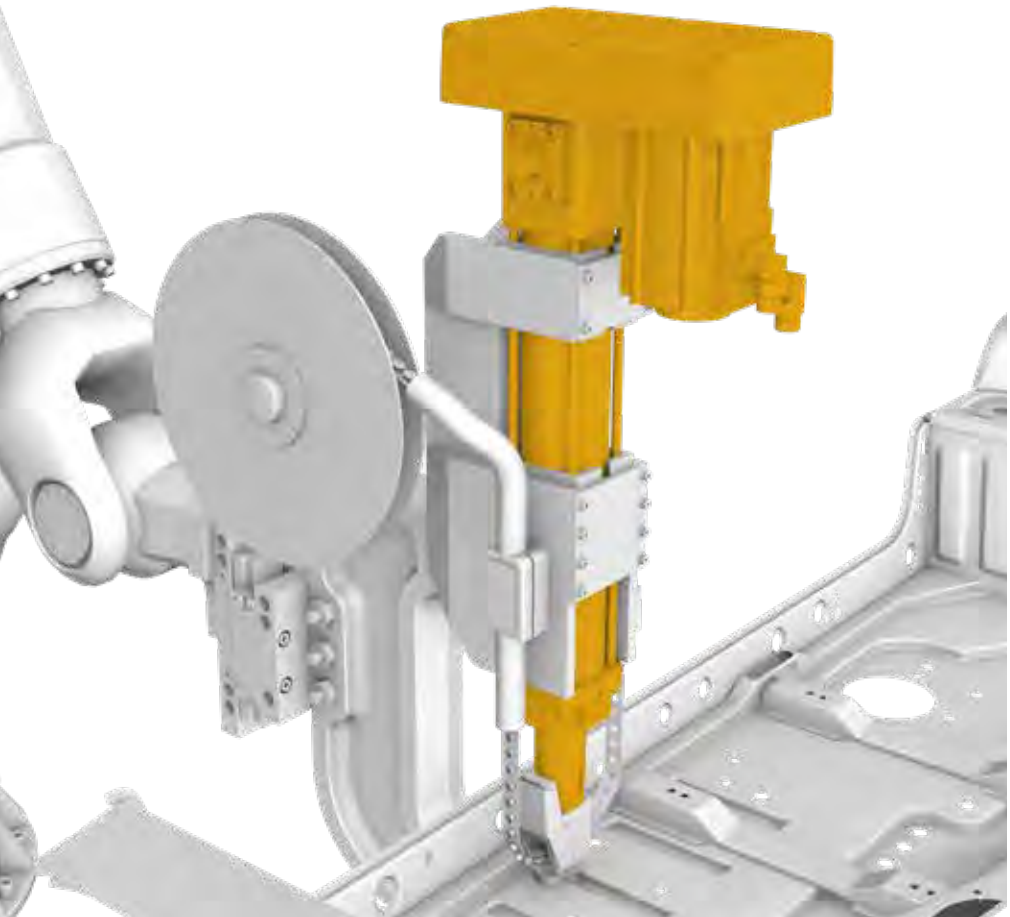

Testing equipment – Bench or simulator

Testing benches require a high level of flexibility to perform different tests, a high level of repeatability to eliminate noise in measurements, and a long service life to survive the equipment being tested. Electric cylinders meet all of these requirements while delivering cost saving energy efficiency.

Depending on the selected type of electric cylinders, testing benches or hexapods can be highly dynamic or ultra-stiff with very high precision. In any case, they offer excellent feedback and real time control.

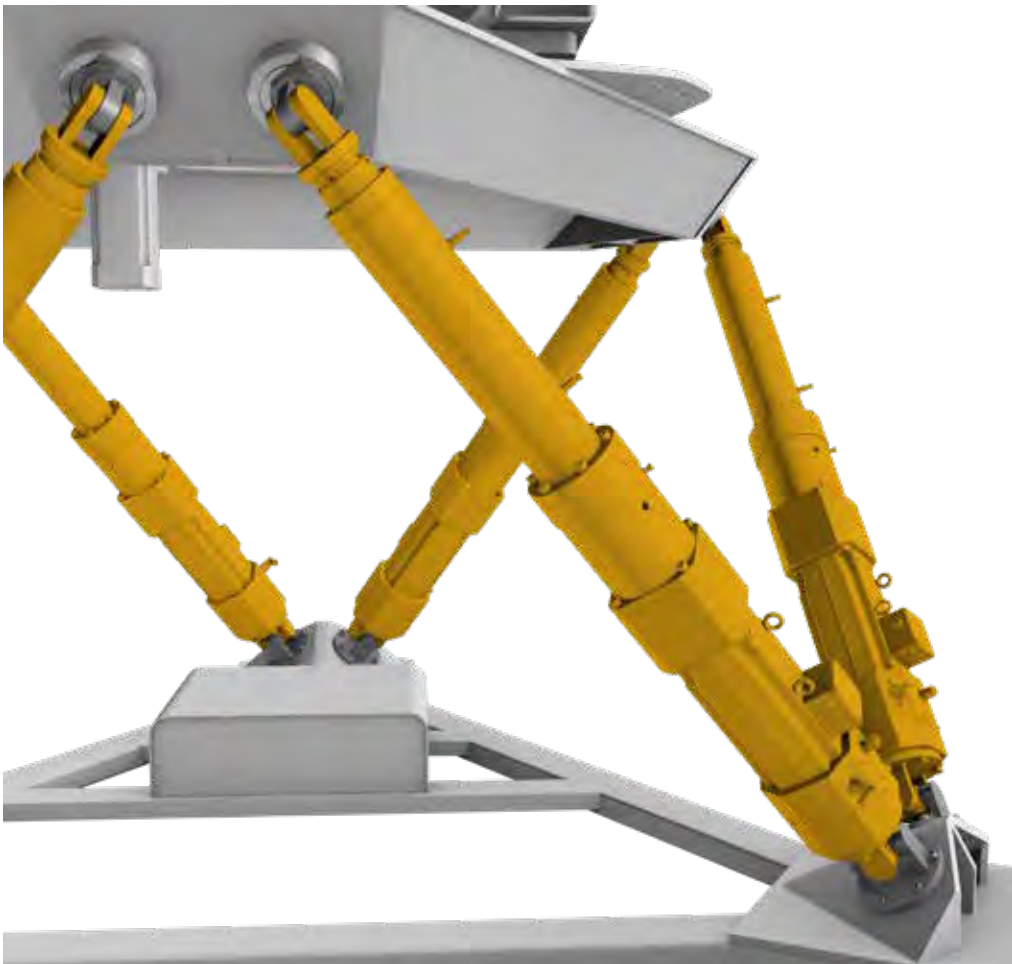

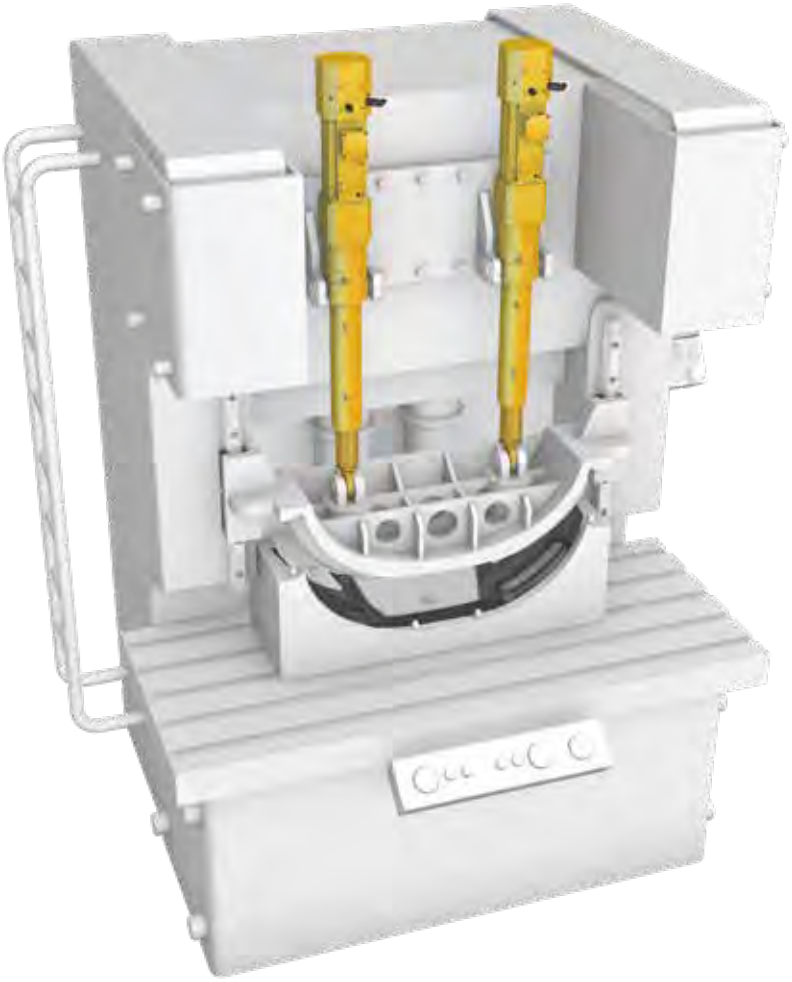

Electric press systems

Thanks to the high controllability of their speed and force, electric cylinders can increase the quality and productivity of pressing and fitting equipment.

Electric press systems are programmable for different workpieces. They are running fully electric and cleanly and are highly energy efficient. The permanent position feedback enables for in-process verification and monitoring, which results in continuous quality on a high level.

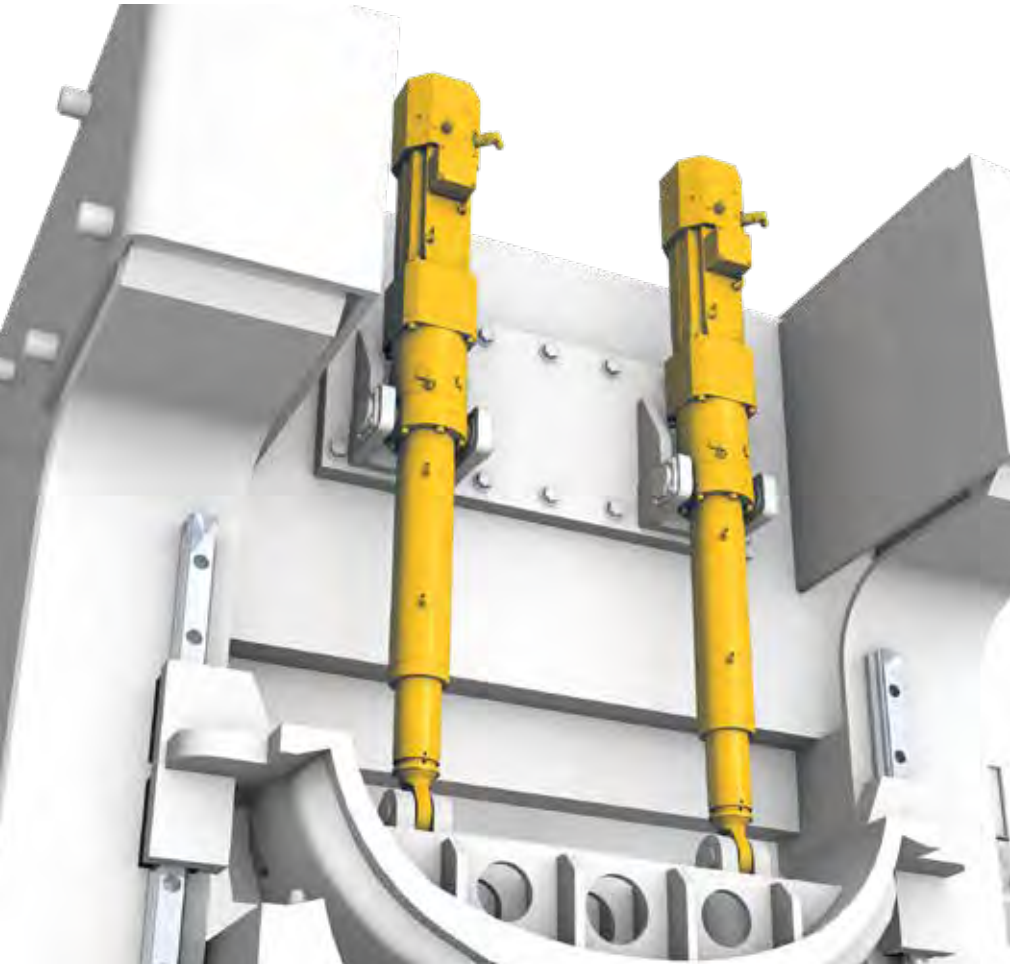

Material joining equipment – Spot welding

Spot welding guns with electric cylinders enable high quality welding spots with constant force while the wear of the electrodes is equalized.

Low weight is a key feature of the compact, fully integrated electric cylinder which allows fast movement of the robot arm.

Reduced production downtime and less wasted material are some of the many advantages of a spot welding gun equipped with electric cylinders.

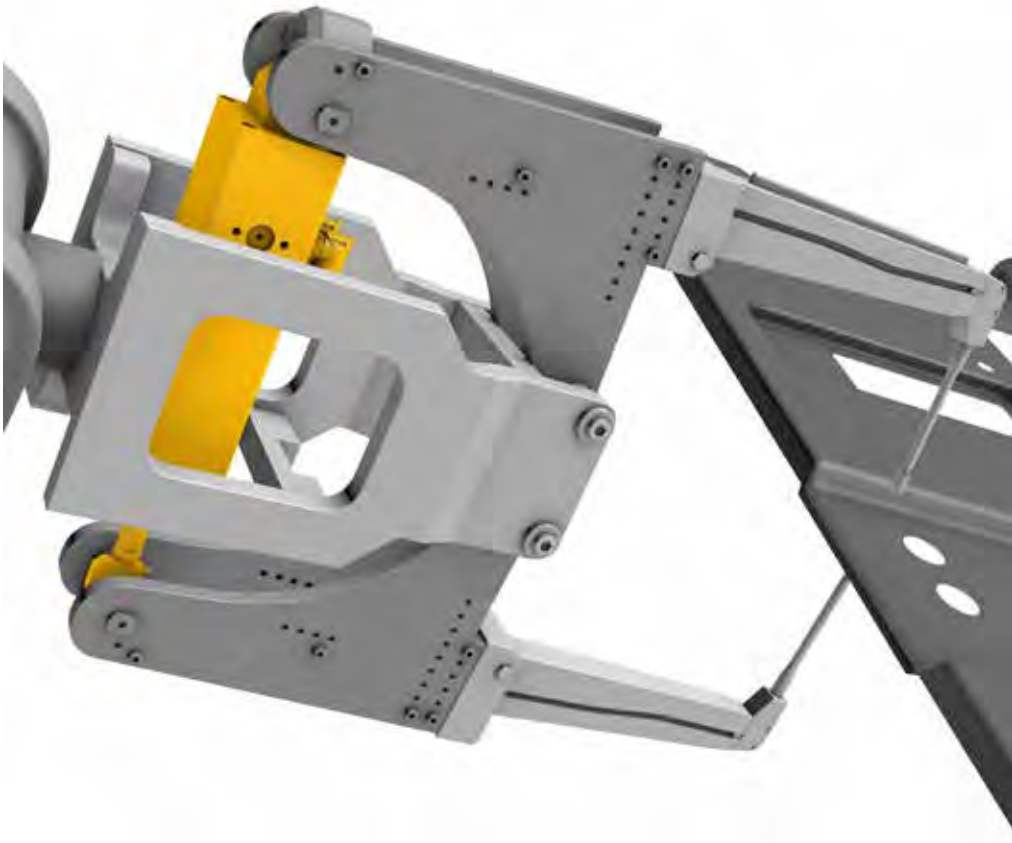

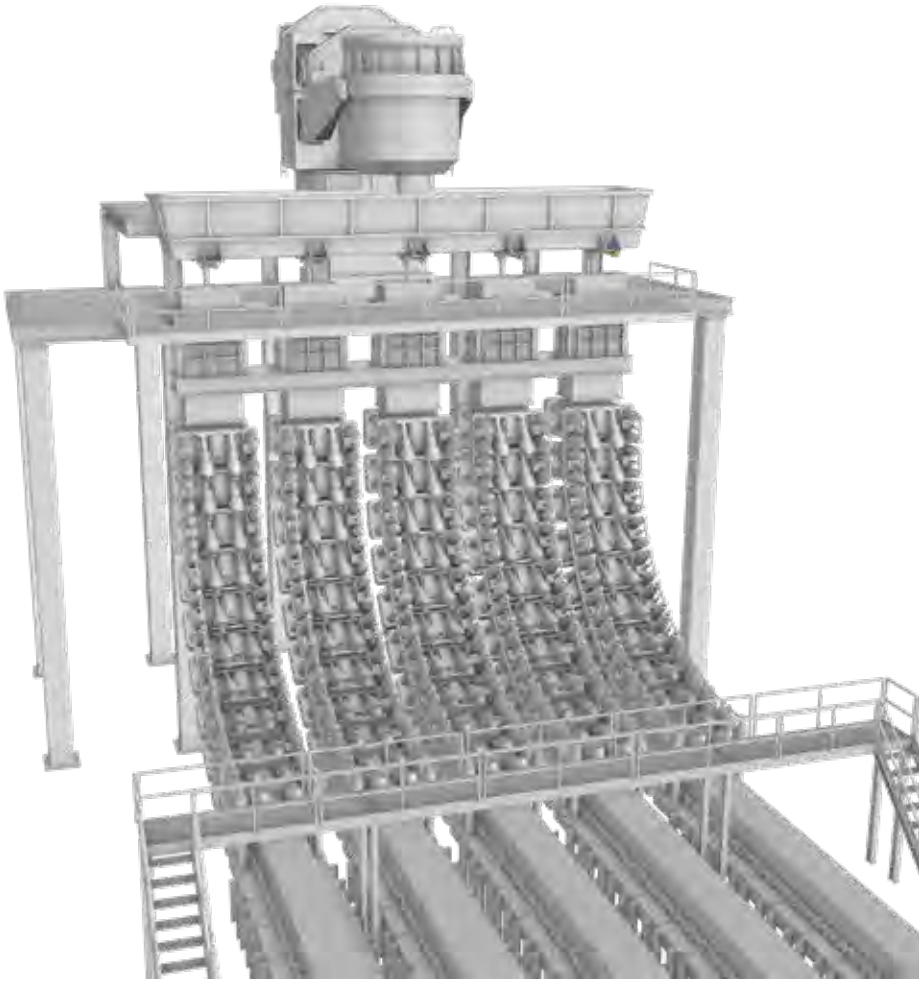

Heavy industry – Continuous casting of metals

Accurate positioning and high force capabilities make electric cylinders the perfect choice to regulate the flow of melted metals in continuous casting equipment.

Electric cylinders are robust and withstand the harsh environment in heavy industry applications.

Reliable products are very important as downtime in metal casting applications can be extremely costly. Electric cylinders offer permanent feedback and can also indicate if maintenance is needed.

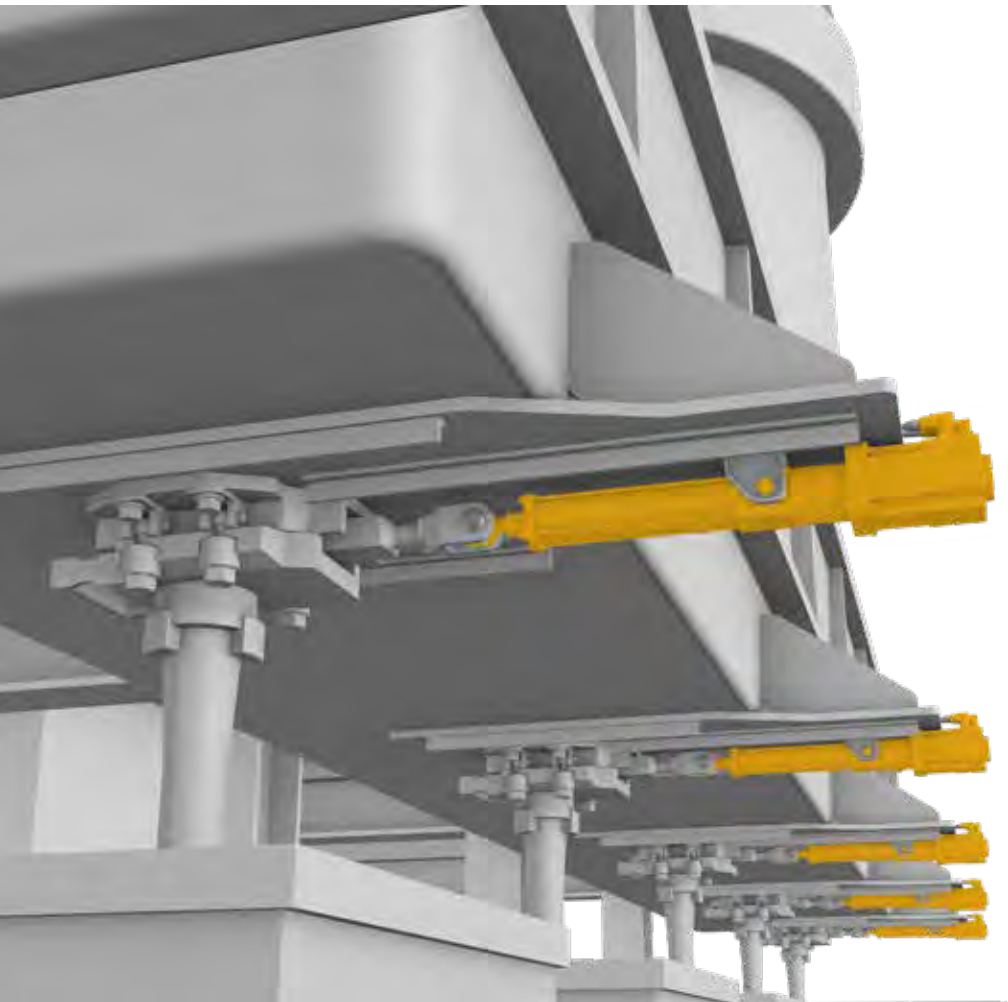

Factory automation – Automotive

The high controllability and robust construction make a CPSM pillar the ideal solution for realizing a smart chassis levelling function in automotive car transfer units.

The need of handling different types of car chassis on the same line requires a flexible system setup that allows a quick resetting with precise positioning.

The optional integrated dampening system protects the pillar from mechanical shocks during the loading and unloading phases, ensuring high reliability and longer lifetime in operation.

The usage of customer-defined servo motors allows for easier integration into the control network, reducing the commissioning time of the transfer unit.

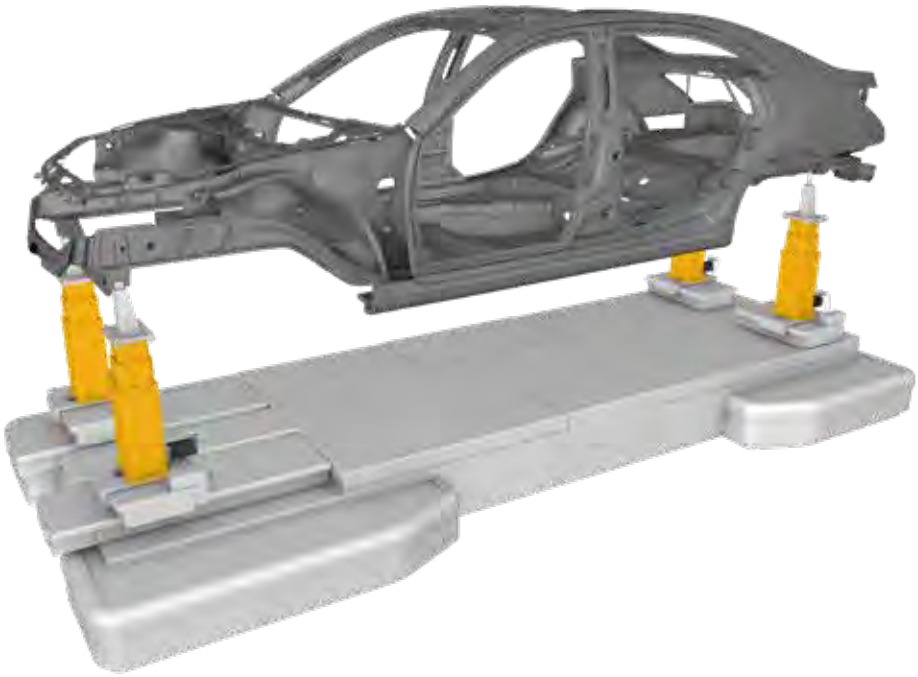

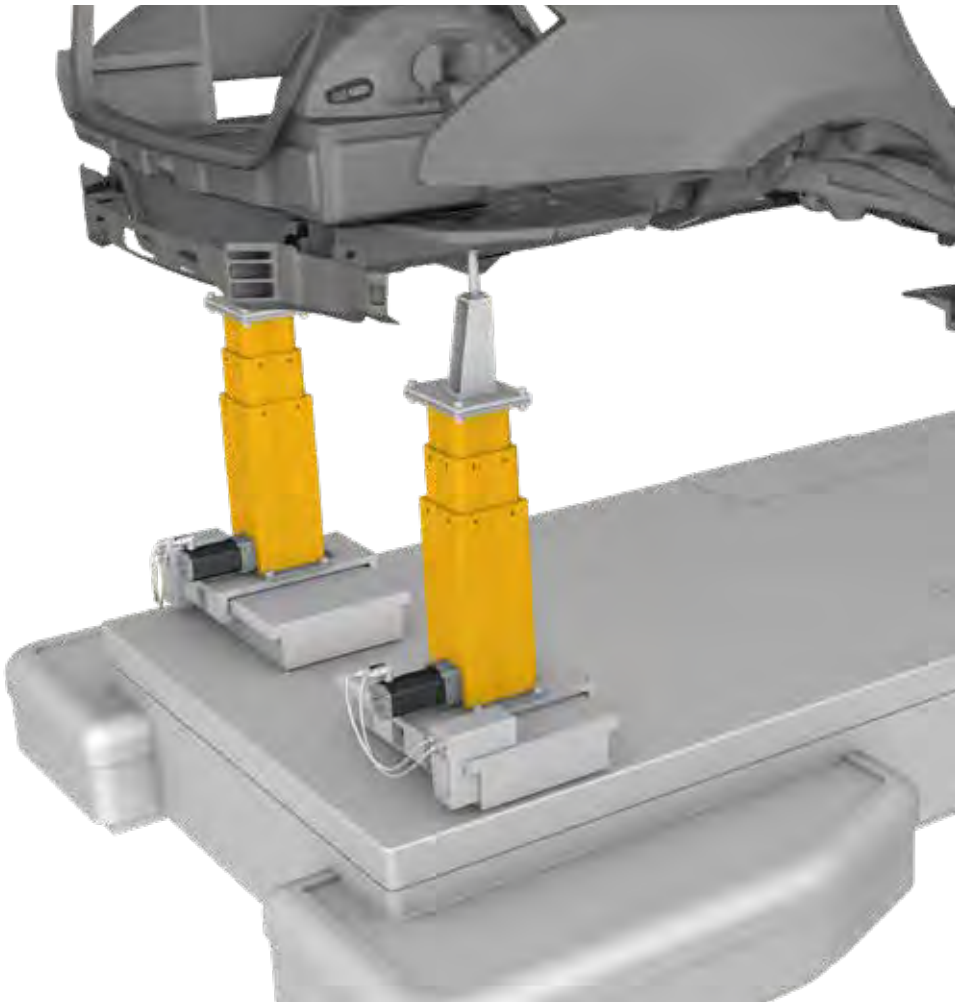

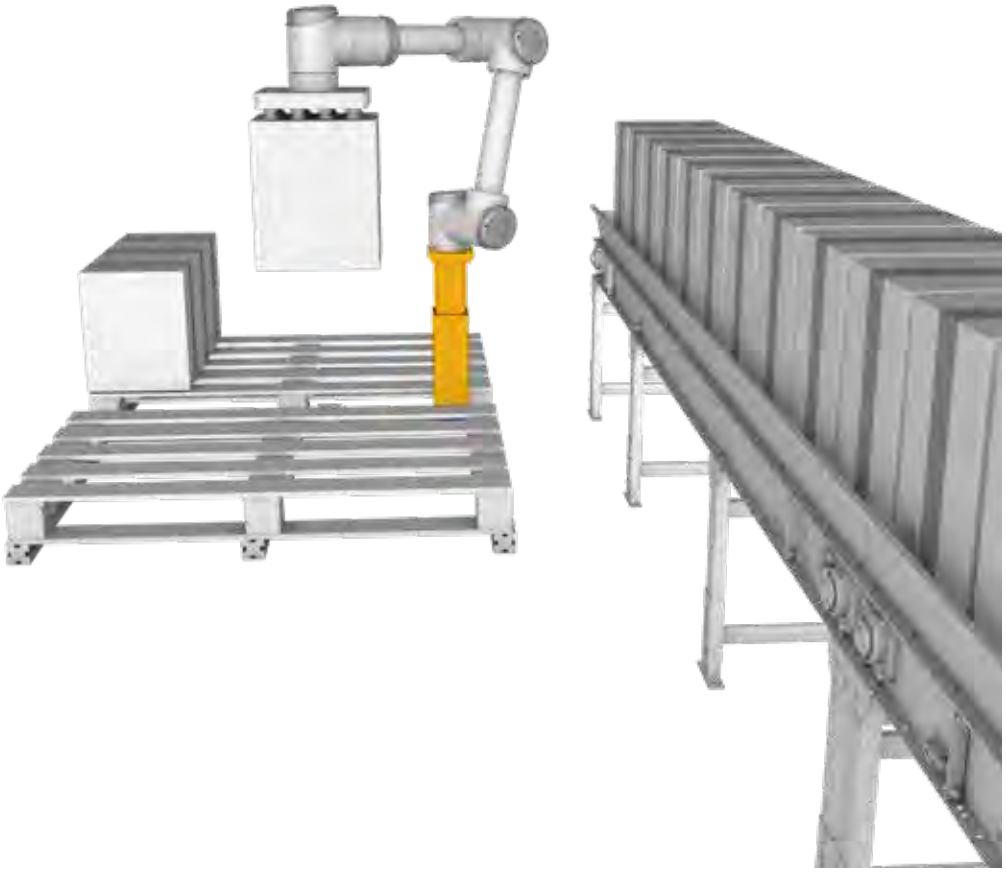

Packaging – Pick and place

Fully automated pick and play solutions are becoming a new standard with packaging stations. The main challenge for packaging system manufacturers is to complete multiaxis systems in a simple and cost effective way, while still delivering the required performance.

CPSM servo pillars represent an effective solution to complete vertical axis regulation, thanks to its ability to move heavy excentric loads with a high duty cycle operation.

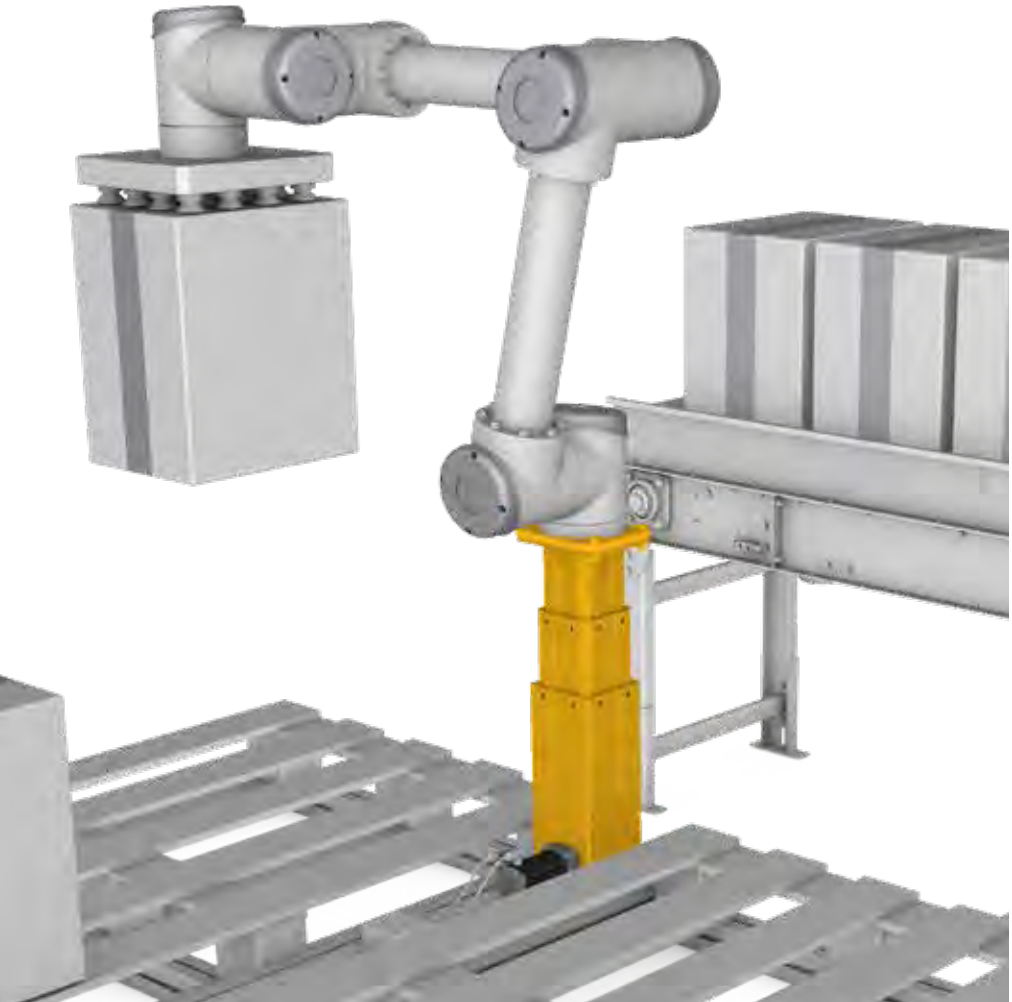

Factory automation - Small presses

Small vertical presses require a high level of flexibility and precise control of the force applied and position of the press head. SEMC actuators can surpass the limit of pneumatic and small hydraulic cylinders typically used in this application by delivering higher performances from the integrated roller screw technology and servomotor controllability.

If you have small dimensions, this solution allows easy retrofit during machine refurbishment, keeping the same mechanical installation layout.

Factory automation – Electronics assembly lines

Electronic products like smartphones or monitors are built in fully automatized lines. The complexity of the product requires a reliable process to grant a constant quality of the final product, across the different assembly operations.

CASM-25 electric cyliders can be used to automatize horizontal or vertical axis on quality inspection stations, normally used in processes like smartphones camera or speaker quality checks. Thanks to their small dimension and precise positioning, they can effectively be used as plug and play positioning capability solutions.

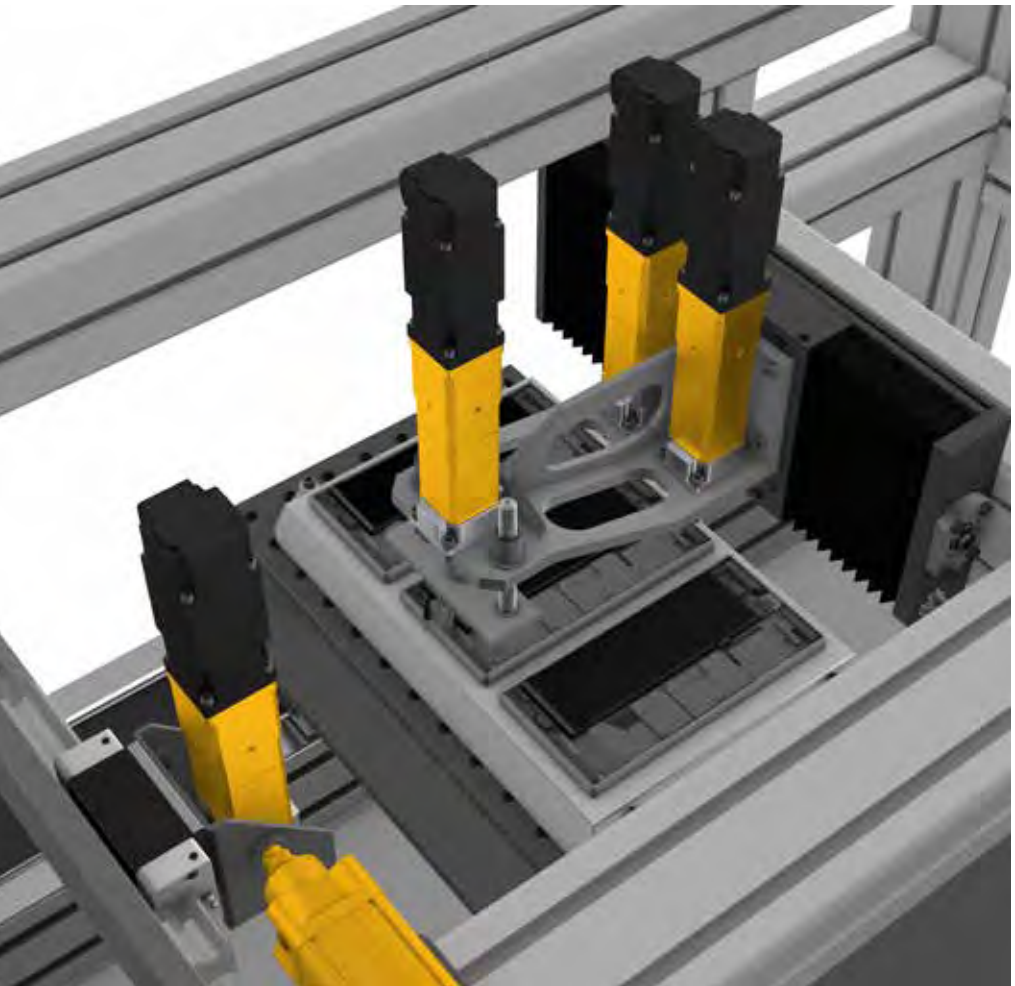

System set-up

Modular concepts enable the linear units to be motorized with motors of your choice. Each motor type has its own special characteristic and allows simple integration in a large number of applications. Speed up your time to market by using the motor type and motor brand you are familiar with. If you prefer to buy complete actuators, Ewellix offers a range of AC motors, brushless DC motors and servo motors which will perfectly suit the performance of the linear units.

AC Motor setup

- 400 V AC mains connection to power the actuator
- Central controller to control the movements and position of the actuator
- Bus communication to decentrally control the actuator and easily integrate it into automated systems

Full flexibility

- Apart from direct connection of the digital inputs and outputs to a PLC, the control signals can be connected to virtually any fieldbus. (Profibus, Ethernet, EtherCAT, AS-i, CanOpen, …) througth I/O modules.

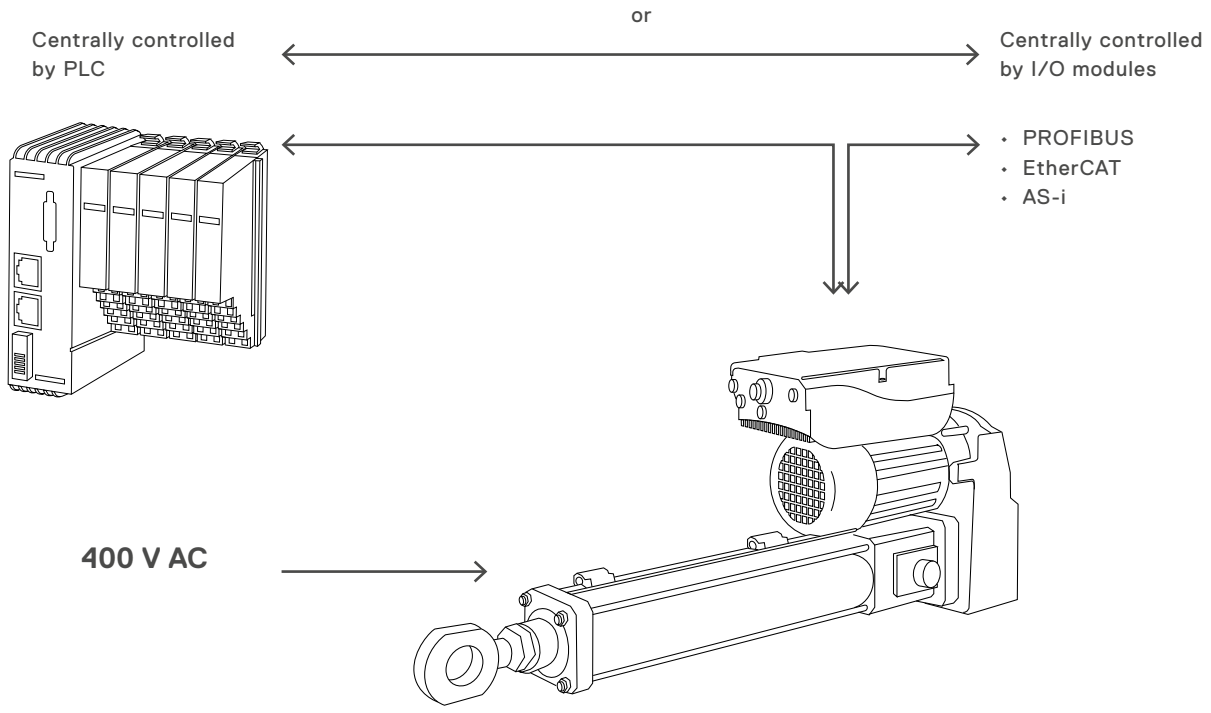

Brushless DC motor setup

- DC power supply to provide power to the actuator
- PLC to recall the pre-parameterized motion profiles which are stored in the integrated motion controller
- PC to initially parameterize the motion controller

Simplicity at its best

Brushless DC motors with integrated drive and brake are the cost efficient all-in-one solution for automated systems. After the initial parameterization, the system runs independently or can be controlled by a PLC.

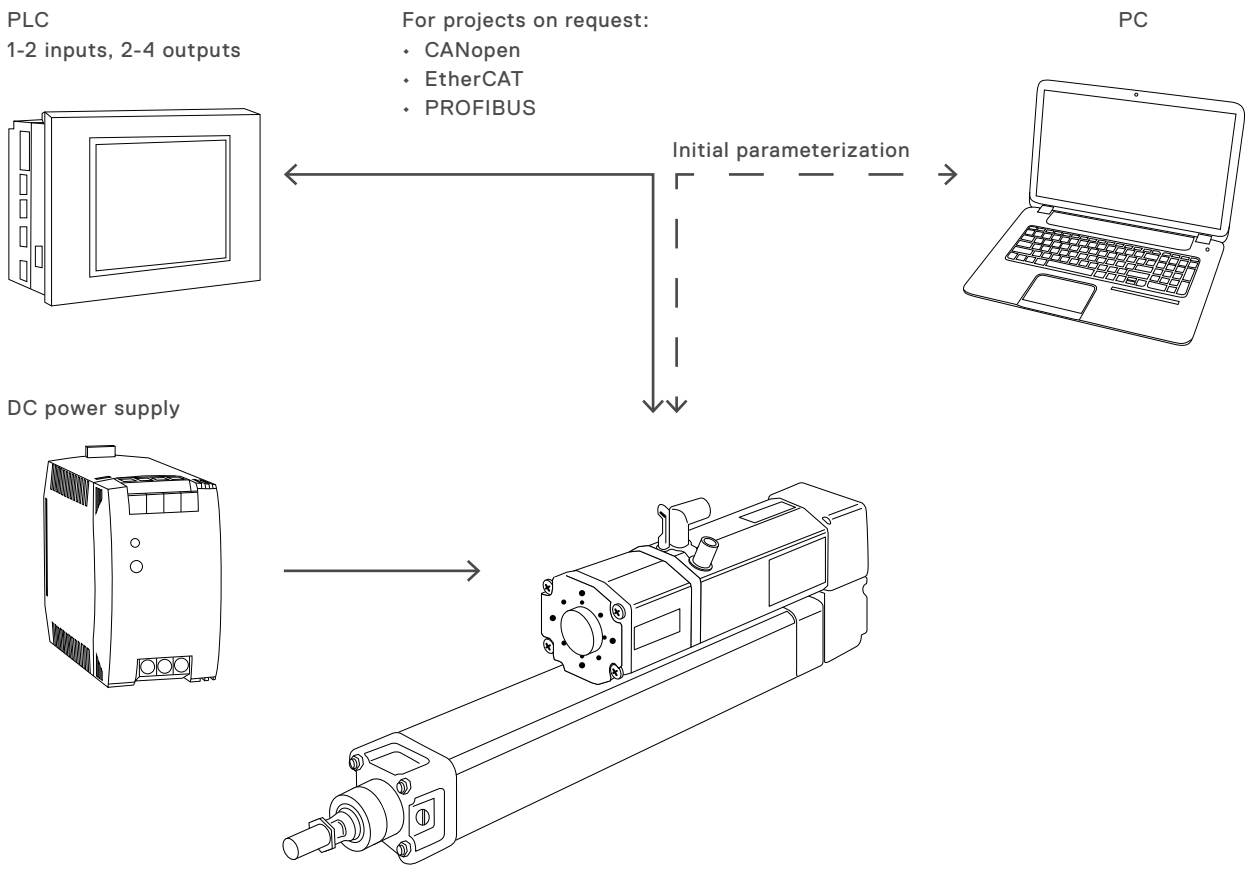

Servo motor setup

- Motion controller to control actuator motion tasks
- PC to define initial settings of motion controller.
- Communication between PLC and motion controller through digital inputs/outputs or fieldbus (CANopen, Profibus, Profinet, Ethernet, EtherCAT, Powerlink MN/CN, Powerlink CN, DeviceNet).

Servo motor systems offer a high power density and highest controllability. Use the full performance of the mechanical system by a compact and powerful servo motor and move to any position with the highest accuracy.

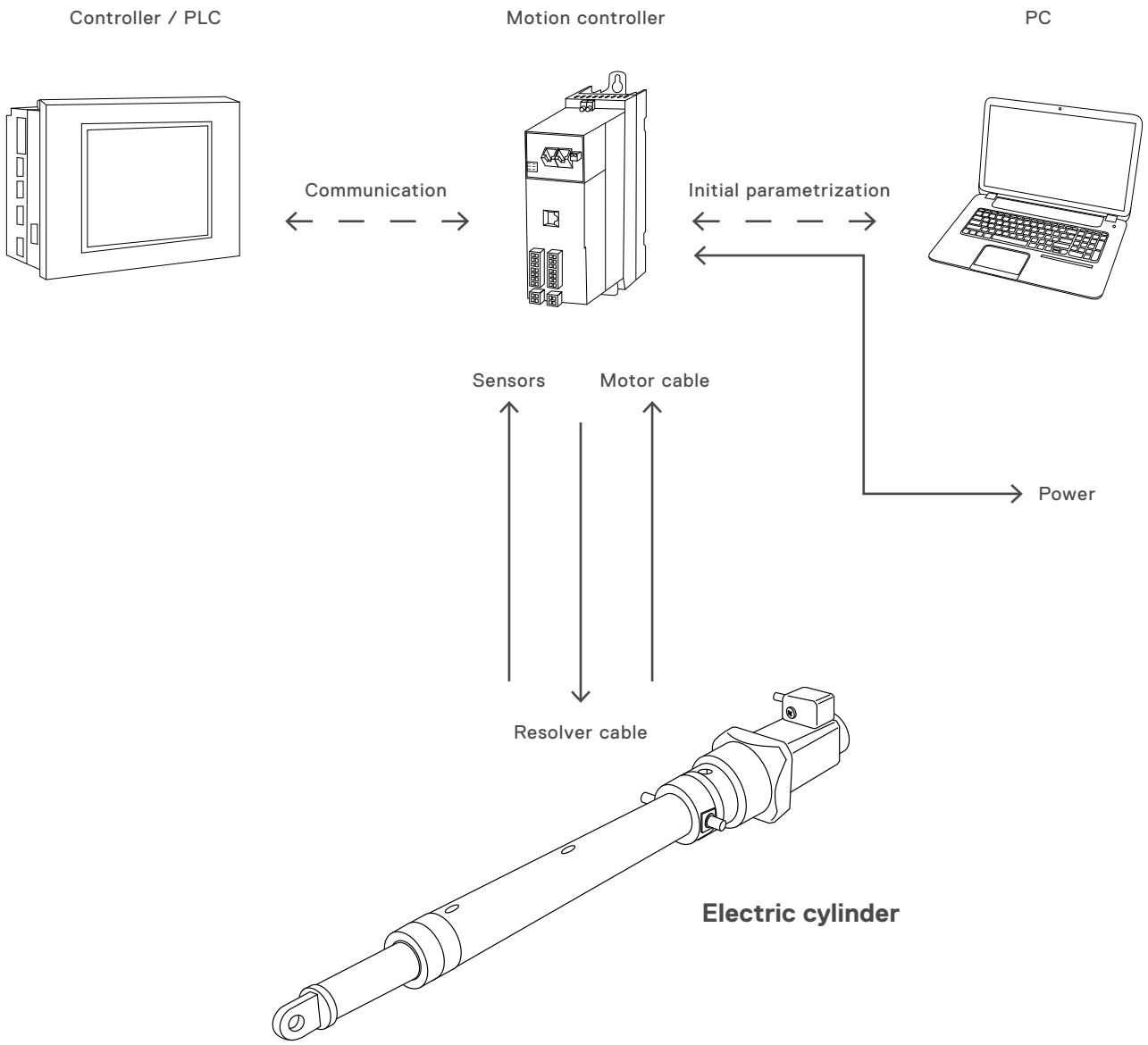

Ewellix engineering tools

To simplify the product selection process, Ewellix has created a set of free Web tools that allow quick and easy navigation into the wide linear motion offering.

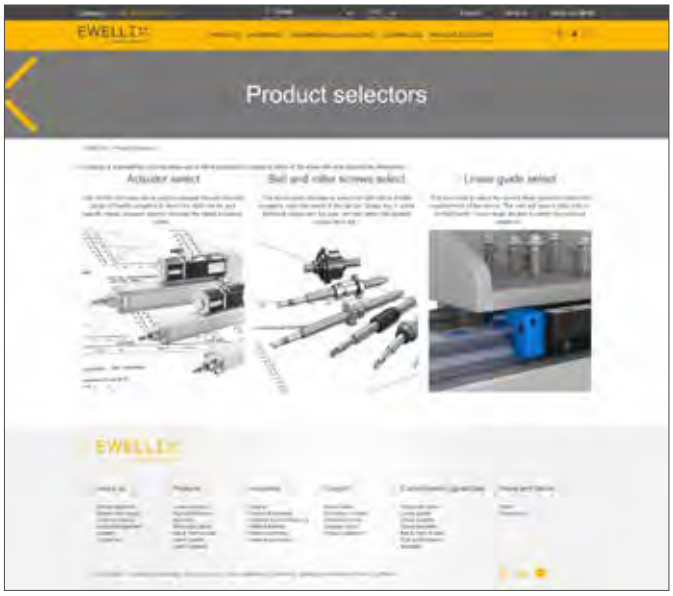

Actuator Select

Users can choose the desired product family among Pillars, Linear Actuators, Rotary Actuators and Controls. Then, by entering few simple parameters, they will be guided in the product selection.

Key features include:

- Four complete product lines
- Dynamic filtering of the results
- Result ranking by application
- Product comparison (up to 3 at time)
- Indication of compatible control unit for selected Pillar or Actuator
- Cost saving calculator
- Direct link to product drawing, technical datasheet and catalogues

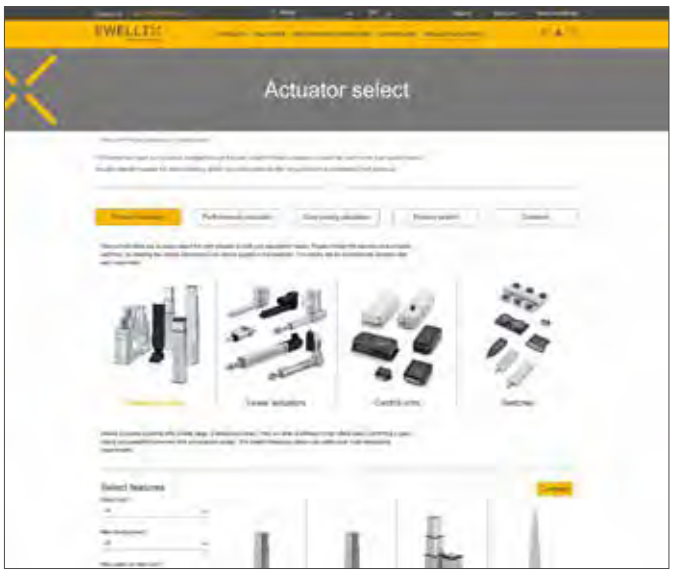

Additionally, there is a specific section dedicated to the selection of linear servo axis components (e.g., motor, linear unit and accessories) based on application data. Users enter application requirements and operating conditions, which the calculator then translates into performance specifications. For a linear servo axis, the calculator will present combinations of motor, linear unit and controller that fulfill the requirements. For in-depth technical information on the High Performance Actuator Calculator, please visit the dedicated section on **page 45**.

2

Calculation

More than 200 Actuator variances to select from

Actuator select performance calculator

The Ewellix High Performance Actuator Calculator section is a free online actuator and accessory selection tool. This calculation tool will give recommendations to select components of a linear servo axis (motor, linear unit and accessories) based on the application data. Based on the requirements and operating conditions of the user, the program will transform them into performance requirements. For a linear servo axis, it will present combinations of motor, linear unit and controller that fulfill the requirements.

The user can insert the main information about the working cycle, describing each step as absolute movement, weight and inertia of the mass to be moved. Based on that, the program will provide simple graphs that show the required position, speed and acceleration over time (↳ **fig. 1**).

Consequently, the program suggests a list of possible solutions that fulfill the user needs in terms of perfomance and lifetime. For each solution, the graphs are updated to show the requirements vs. the real performance of the selection (↳ **fig. 2**).

Fig. 1

Fig. 2

The user can then select the desired accessories, like front and rear attachments and limit switches. For each of them, it is possible to see the product picture and a brief description (↳ **fig. 3**).

Finally, the program provides a recap of the selected solution and a printable list of the selected items for ordering (↳ **fig. 4**).

Fig. 3

Fig. 4

EWELLIX

Simplified calculation process

By following the described flow (↳ **diagram 1**), the user can select the right linear unit and motor that fulfill the application needs. Each of these steps is described in the following pages, with the related calculation formulas to be used and a real example. The main factors to be considered from the application are the equivalent dynamic axial load, acting on the actuator, the travel distance to be achieved and the desired speed during the working cycles. From these values, user can then define the right actuator size and the required motor performances, in terms of torque and rotating speed. Finally, it's then possible to define the desired type of motor adapters, to match the possible dimensional constrains or to get a reduction ratio between the motor and the linear unit. If further assistance is needed, please contact Ewellix to get complete technical support.

Diagram 1

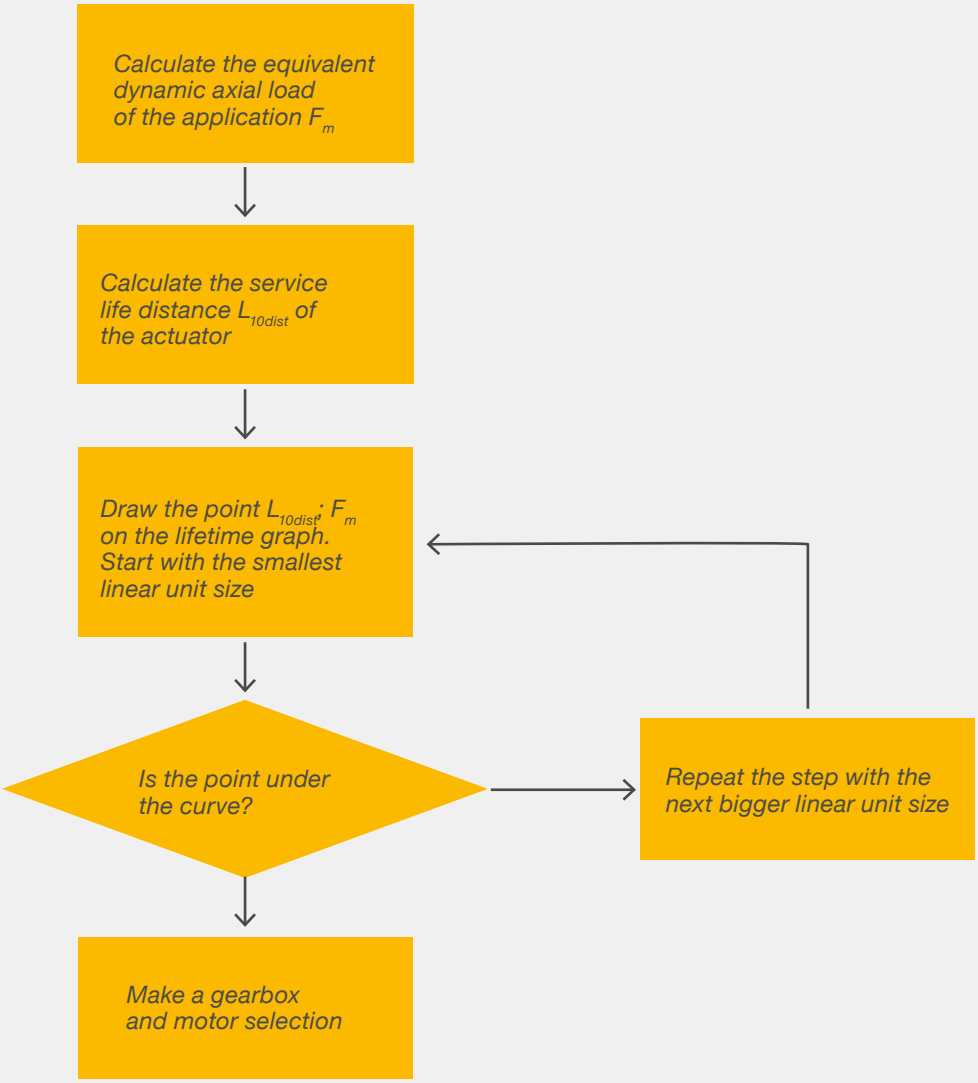

General calculation formulae

How to calculate the equivalent dynamic axial load F_m of the application.

In most of the applications, the magnitude of the load fluctuates over the travelling distance. The service life of the linear unit depends on the load acting on it. To simplify the calculation we calculate the equivalent dynamic axial load over a full motion cycle F_m which has the same influence on the linear unit's service life as the actual fluctuating load.

$$F_m = \sqrt[3]{\frac{F_1^3 \times s_1 + F_2^3 \times s_2 + F_3^3 \times s_3 + \ldots}{s_1 + s_2 + s_3}} = 570\ \text{N}$$

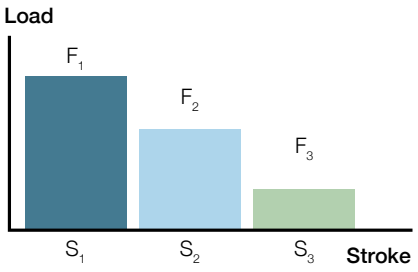

or

$$F_m = \frac{F_{min} + 2F_{max}}{3}$$

where:

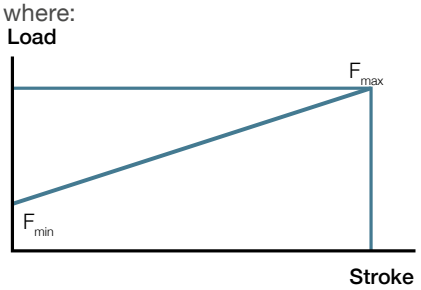

F_m:	Equivalent dynamic axial load in N
F_1, F_2… F_n:	Load exerted over a segment of travelled distance sn
S_1, S_2… S_n:	Travelling distance over which the load F_n is exerted

Example to calculate the equivalent dynamic axial load

F_1 = 700 N, s_1 = 200 mm
F_2 = 500 N, s_2 = 0 mm
F_3 = 300 N, s_3 = 200 mm

$$F_m = \sqrt[3]{\frac{700^3 \times 200 + 500^3 \times 0 + 300^3 \times 200}{200 + 0 + 200}} = 570\ \text{N}$$

or

$$F_m = \frac{300 + 1\,400}{3} = 566\ \text{N}$$

How to calculate the lifetime distance L_{10dist}

The service life distance L_{10dist} is defined as the life in km that 90% of a sufficiently large group of apparently identical actuators can be expected to attain or exceed.

$$L_{10dist} = \frac{S_{cycle}\, t_L \times 3{,}6}{t_{cycle}}$$

$L_{10dist} = s_{cycle}\, n_{cycles}$

where:

L_{10dist}: Lifetime distance in km
S_{cycle}: Distance travelled per motion cycle in m (both directions)
t_{cycle}: Time per motion cycle in s (from one motion cycle to the next)
t_L: Required lifetime in hours
n_{cycles}: Number of cycles (in 1 000)

Example to select a linear unit

Total distance travelled per motion cycle: s_{cycle} = 0,4 m
Total time per motion cycle: t_{cycle} = 20 s
Required lifetime: t_L = 5 years × 230 days/year × 24 hours/day = 27 600 hours
n_{cycles} = 3 cycles/minute × 60 minutes × 24 hours × 230 days × 5 years / 1000 = 4 968 k_{cycles}

$$L_{10dist} = \frac{0{,}4 \times 27\,000 \times 3{,}6}{20} = 1\,987 \text{ km}$$

L_{10dist} = 0,4 × 4 968 = 1 987 km

Select the linear unit

Equivalent dynamic axial load F_m = 570 N
Lifetime distance L_{10dist} = 1 987 km

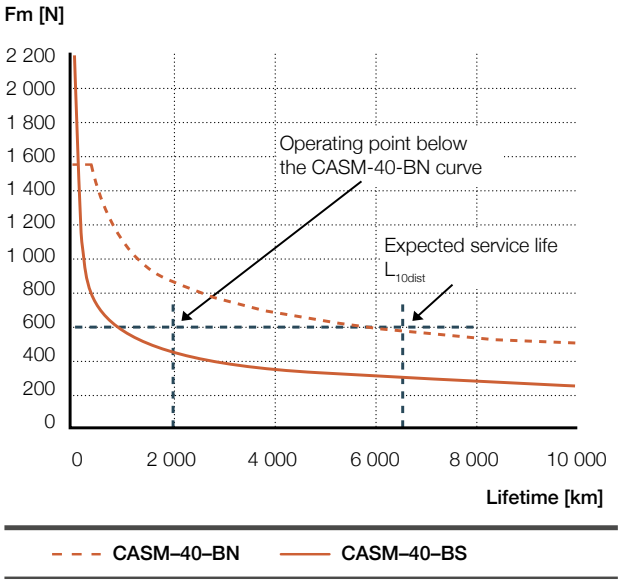

The operating point is below the CASM-40- BN curve. It is the smallest linear unit which fulfills the requirements. The expected service life is almost 6 500 km.

Motor selection

How to calculate the thermal load of the motor F_{th}

To calculate the mean motor torque, we first need to calculate the thermal load F_{th} over the motor running time. Please note that the use of a motor brake during pause time will reduce the needed power of the motor.

$$F_{th} = \sqrt[2]{\frac{F_1^2 \times t_1 + F_2^2 \times t_2 + F_3^2 \times t_3}{t_1 + t_2 + t_3}}$$

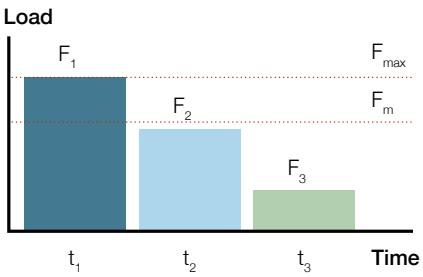

F_{th}: Equivalent thermal load of the application
$F_1, F_2 \ldots F_n$: Load exerted over a time (percentage of full motion cycle time t_{cycle})
$t_1, t_2 \ldots t_n$: Time over which the load F_n is exerted

Example

F_1 = 700 N, t_1 = 2 s
F_2 = 500 N, t_2 = 15 s (No travelling distance, but to hold a load of 500 N in position)
F_3 = 300 N, t_3 = 3 s

If no brake is engaged

$$F_{th} = \sqrt[2]{\frac{700^2 \times 2 + 500^2 \times 15 + 300^2 \times 3}{1 + 15 + 3}} = 500 \text{ N}$$

If a brake is engaged during the period t_2 to hold the load (F_2 = 0 for the motor)

$$F_{th} = \sqrt[2]{\frac{700^2 \times 2 + (0^2 \times 15) + 300^2 \times 3}{1 + 15 + 3}} = 250 \text{ N}$$

How to select an Ewellix – verified motor

When using an Ewellix-verified motor, make sure that the continuous force of the actuator mentioned in the system capabilities is equal to or higher than the calculated thermal load F_{th} of your application.

Example

The continuous force F_c of the CASM-40-BN inline configuration with Siemens 1FK7022 servo motor is 301 N. This is only enough if the brake is activated during the pause time t_2. (F_{th} = 250 N) (↳ **table 1**).

If the system should run without using a brake, the bigger motor 1FK7034 is needed with a continuous force of 572 N (F_{th} = 500 N) (↳ **table 2**).

Table 1

CASM-40 inline configuration with Siemens 1FK7022

	Unit	Peak force F_p	Cont. force F_c
CASM-40-LS	N	600	710
CASM-40-BS	N	2 375	758
CASM-40-BN	N	1 447	302

Table 2

CASM-40 inline configuration with Siemens 1FK7034

	Unit	Peak force F_p	Cont. force F_c
CASM-40-BS	N	2 375	1 485
CASM-40-BN	N	1 550	574

How to select a motor not verified by Ewellix

If using a motor of your choice, the force capabilities of the linear units have to be converted into motor torque specifications for the motor. The minimum required continuous torque and the maximum torque of the motor need to be calculated. This could either be done by considering screw leads and friction or by a simplified calculation using information about the linear unit's maximum input torque to get the maximum force.

Calculation of the required continuous torque of the motor

$$M_{Ac} = \frac{M_{max} F_{th}}{F_{max}}$$

where

M_{Ac}: Required continuous torque of the motor in Nm
M_{max}: Maximum input torque of the linear unit in Nm
F_{th}: Equivalent thermal load of the application in N
F_{max}: Maximum dynamic axial force of the linear unit in N

Example (if using the brake)

$$M_{Ac} = \frac{4 \times 250}{1\,550} = 0{,}65 \text{ Nm}$$

Calculation of the maximum required torque of the motor

$$T_{Amax} = \frac{T_{Umax} F_{Amax}}{F_{Umax}}$$

where

M_{Amax}: Required maximum torque of the motor in Nm
T_{Umax}: Maximum input torque of the linear unit in Nm
F_{Amax}: Maximum dynamic axial load of the application in N
F_{Umax}: Maximum dynamic axial force of the linear unit in N

$$M_{Amax} = \frac{4 \times 700}{1\,550} = 1{,}81 \text{ Nm}$$

In our example, the continuous torque of the motor should be higher than 0,65 Nm (if using the brake) while the maximum torque must exceed 1,81 Nm to move the load of 700 N.

This calculation is valid for inline adapters and parallel adapters with a belt, where the gear ratio equals 1 and the efficiency is close to 100%.

The rotational speed is directly linked to the linear speed. Divide the linear speed by the screw lead to obtain the rotational speed. The relation of torque and force is a constant factor: To get the torque, take the force * M_{max} / F_{max}

Please Note

The dynamic torque of the motor may vary with the speed. Please make sure that your motor is able to reach the needed speed, acceleration and max. torque for your application.

Calculation examples

Dosage of liquids with CASM electric cylinders

Technical requirements

Stroke:	s = 100 mm
Mounting position:	horizontal
Push force:	F_1 = 250 N
Pull force:	F_2 = 50 N
Cycles:	90 cycles per minute
Working time:	16 hours per day
Lifetime:	2 years (520 days)

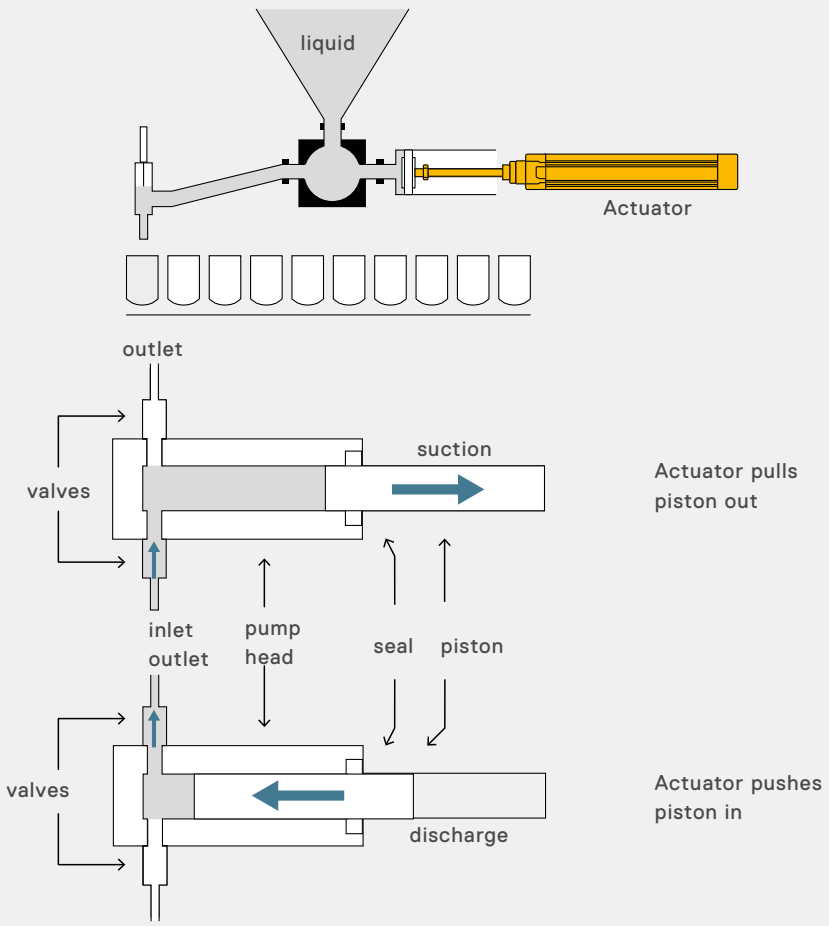

Selection of the linear unit

Calculate the equivalent dynamic axial load F_m of the application

$$F_m = \sqrt[3]{\frac{F_1{}^3 s_1 + F_2{}^3 s_2 + F_3{}^3 s_3 + \ldots}{s_1 + s_2 + s_3}}$$

where

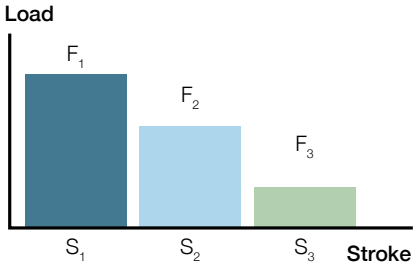

F_m = Equivalent dynamic axial load in N
$F_1, F_2 \ldots F_n$ = Load exerted over a segment of travelled distance s_n
$s_1, s_2 \ldots s_n$ = Travelling distance over which the load F_n is exerted

$$F_m = \sqrt[3]{\frac{250^3 \times 100 + 50^3 \times 100}{100 + 100}} = 199 \text{ N}$$

Calculate the service life distance L_{10dist}

$L_{10dist} = s_{cycles} \times n_{cycles}$

where:

L_{10dist} = Lifetime distance in km
S_{cycle} = Distance travelled per motion cycle in m (both directions)
n_{cycles} = Number of cycles (in 1 000 cycles)

Distance travelled per motion cycle:
s_{cycle} = extend 100 mm + retract 100 mm = 0,2 m

Number of cycles n_{cycles} = 90 cycles × 60 minutes × 16 hours × 520 days = 44 928 k_{cycles}
L_{10dist} = 0,2 × 44 928 = 8 985,6 km

Select the linear unit

Equivalent dynamic axial load F_m = 199 N
Lifetime distance L_{10dist} = 8 985,6 km

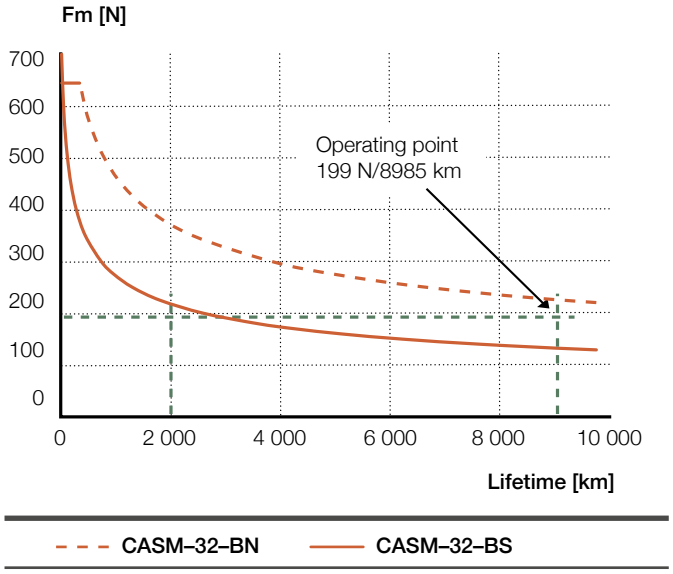

The operating point is below the dashed line. The CASM-32-BN is the smallest linear unit for this application which fulfills the requirements.

Selected linear unit: CASM-32-BN with 100 mm stroke. The expected service life is > 10 000 km

Speed check

To move 200 mm within 0,667 seconds (90 cycles per minute), we need a speed of at least 200 mm/0,667 s = 300 mm/s.

The CASM-32-BN can do 500 mm/s.

Linear unit CASM–32–BN

Selection of the motor

Calculation of the thermal load of the motor F_{th}

$$F_{th} = \sqrt[2]{\frac{F_1^2 t_1 + F_2^2 t_2 + F_3^2 t_3 + \ldots}{t_1 + t_2 + t_3}}$$

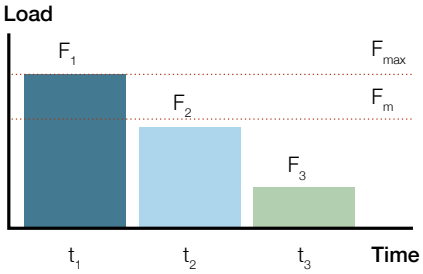

where:

F_{th}: Equivalent thermal load of the application

$F_1, F_2 \ldots F_n$: Load exerted over a time (percentage of full motion cycle time t_{cycle})

$t_1, t_2 \ldots t_n$: Time over which the load F_n is exerted

$$F_{th} = \sqrt[2]{\frac{250^2 \times 0{,}333 + 50^2 \times 0{,}333}{0{,}333 + 0{,}333}} = 180 \text{ N}$$

What if we would move with maximum speed and engage the brake during the pause time? The maximum speed is 500 mm/s. We could do the 100 mm stroke within 0,2 seconds (acceleration and deceleration disregarded).

$$F_{th} = \sqrt[2]{\frac{250^2 \times 0{,}2 + 50^2 \times 0{,}2 + 0{,}333}{0{,}2 + 0{,}2 + 0{,}267}} = 140 \text{ N}$$

In some cases, a smaller (cheaper) motor can be used if we are using a brake.

Using an Ewellix verified motor

Make sure that the continuous force of the actuator is higher than the calculated thermal force F_{th} of the application.

The continuous force F_c of the CASM-32-BN with a Siemens 1FK7015 motor is 169 N. This would only work if we are moving with maximum speed and engage the brake during the pause time (↳ **table 3**, **fig. 1** and **2**).

If we don't want to use a brake, the bigger motor 1FK7022 is needed which allows a continuous force F_c of 385 N.

Table 3

CASM-32 inline configuration with Siemens 1FK7015

	Unit	Peak force F_p	Cont. force F_c
CASM-32-LS	N	300	47
CASM-32-BS	N	700	503
CASM-32-BN	N	528	169

Fig. 1

Inline adapter kit for CASM-32 and Siemens 1FK7015 motor

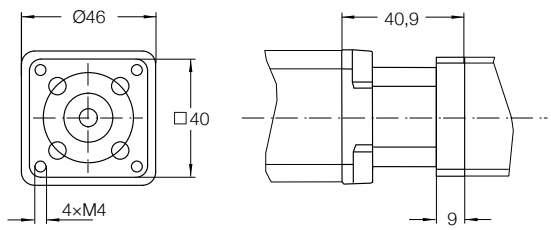

All dimensions in mm

Fig. 2

When doing 90 cycles per minute with the slowest possible speed of 300 mm/s, the bigger motor 1FK7022 is needed which allows a continuous force F_c of 385 N (↳ **table 4**, **fig. 3** and **4**).

Table 4

CASM-32 inline configuration with Siemens 1FK7022

	Unit	Peak force F_p	Cont. force F_c
CASM-32-BS	N	700	700
CASM-32-BN	N	528	385

Fig. 3

Inline adapter kit for CASM-32 and Siemens 1FK7022 motor

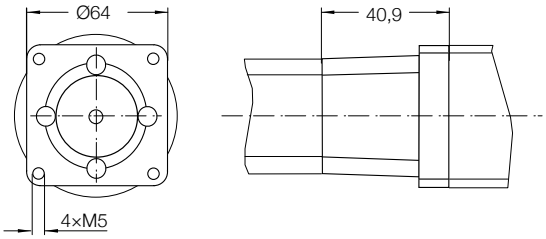

All dimensions in mm

Fig. 4

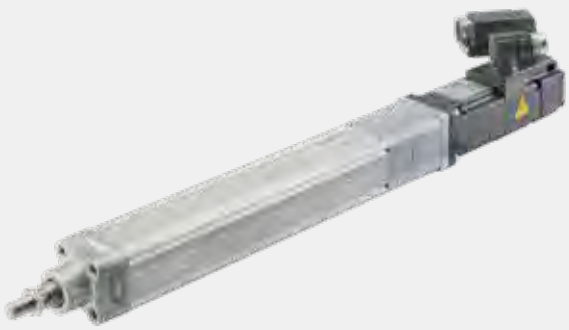

Fluid power replacement advices

To realize all the advantages of electromechanical actuators, the approach to system redesign must be different from the commonly adopted one. As pneumatic, hydraulic and electromechanical cylinders have unique features, there needs to be a change in thinking when it's time to replace one with the other.

In fact, it's important to understand the different mechanical and electrical specifications along with the required budget, as there are always multiple ways to replace one application. This requires more time to analyze and study but it's the only way to make an effective product selection that can save a lot of money at the end.

There are some common mistakes that designers can make when replacing a fluid powered cylinder with a electromechanical one that may lead to oversized systems. To avoid them, it's important to consider the following:

Define the real force requirement

In many applications, the real work load and related required push and pull forces are not known, as it's quite easy with fluid power to oversize the system by using higher pressures or bigger cylinder diameters. This can lead to an oversize of the actuator screw and motor that significantly increases the cost. Instead, by measuring the real force in the application, it's possible to select an optimized solution that delivers the required performance at the right price.

Evaluate the duty cycle in operation

While duty cycle can have a minor impact on fluid powered systems, in actuators it can determine the type of motor technology required and therefore the related system complexity and cost. If the application is done from time to time (e.g. 1 minute operating – 4 minutes standing still), it's possible to use brushed motors that can deliver the required power much cheaper than equivalent brushless motors with drivers.

Analyze the mechanical layout

Hydraulics can deliver more power in a smaller package than electromechanical actuators. In case of leveraged connections (e.g. scissor mechanism), it's quite common to have an unfavorable situation where the high forces are exerted over a very short stroke. By slightly revising the mechanical layout, it may be possible to have more favorable leverages that spread the load over a longer stroke, requiring less peak output power and then a smaller actuator.

Define the required motion accuracy

Depending on the application, it may be needed to perform a simple motion from one position to another and back or to have fine control of the speed and acceleration in multiple positions. With electromechanical actuators, the simple DC and asynchronous AC motors can perform basic movements in an ON/OFF control mode while with a servo motor, it's possible to achieve complete control in operation with the use of a motion controller. Moreover, depending on the positioning accuracy required, it's possible to select a simple trapezoidal screw with axial play or a recirculating pre-loaded roller screw for the ultimate positioning precision and repeatability, down to microns. The cost and control complexity rises linearly allowing a direct selection tailored to real application needs.

With more than 40 years of experience in making electromechanical actuators, Ewellix has extensive expertise in sizing electromechanical solutions for different types of industries and applications. A dedicated team of Application Engineers are available to support customers in defining the right solution, and advising on the best choice based on theoretical calculation and field expertise.

Ewellix offers the widest range of actuators on the market that can also be customized to fit any application requirements.

↳ Visit ewellix.com/actuator-select to easily select and size your actuator and to get in contact with our experts.

3

Product range

Up to 500 kN Axial Force

EWELLIX

Electric cylinders CASM-25

Features

- Compact design: 36 × 36 mm body section dimension
- High load capacity (Static 2,6 kN, dynamic 300 N)
- High positioning accuracy and repeatability due to precision ball screw
- High duty cycles
- Virtually maintenance-free
- Push tube with anti-rotation function

Benefits

- Designed for Automation and Electronics Industry
- Cost effective solution
- Compatible with any third party motor brand
- Easy installation
- Space saving solution
- Long life in operation

Product description

In addition to standard electrical cylinder product range, Ewellix offers an extensive customization program that is able to fulfill specific application needs.

The CASM-25 actuator is a customized solution designed for light automation applications and electronic manufacturing industry. This miniature actuator can deliver high static and dynamic force with precise motion and long life in operation.

Ewellix solution is based on a high precision ballscrew SD8 × 2,5, with a full aluminium body, resulting in a very compact solution with high power density.

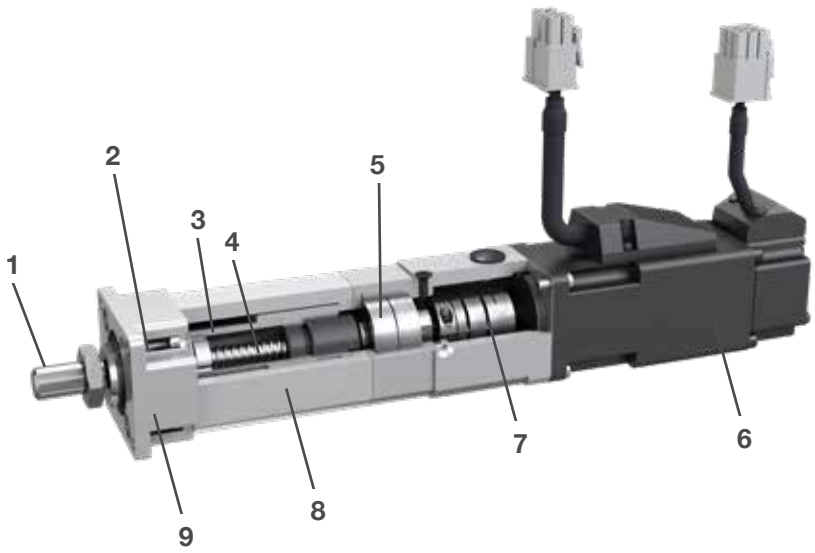

1. Stainless steel push tube
2. Shaft seal to protect against contaminants ingress
3. Sinter filter for high airflow
4. Flat seal between housings
5. High quality ball and lead screws with low axial play and low friction, lubricated for the whole product life
6. Magnet ring for proximity sensors
7. Anti-rotation device with overload protection
8. High-quality SKF bearings
9. Anodised aluminium profile with proximity sensor slots

CASM-25

Linear unit

Technical data

Designation	Symbol	Unit	CASM-25
Performance Data			
Max. dynamic axial force	F_{max}	N	300
Max. static axial force	$F0_{max}$	N	2 600
Dynamic load capacity	C	N	2 042
Maximum torque to reach F_{max}	M_{max}	Nm	0,15
Max. linear speed	V_{max}	mm/s	125
Max. rotation speed	n_{max}	1/min	3 000
Max. acceleration	a_{max}	m/s^2	4
Duty cycles	D_{unit}	%	100
Mechanical Data			
Screw type	–	–	Ball screw
Screw diameter	D_{screw}	mm	8
Screw lead	P_{screw}	mm	2,5
Lead accuracy	–	–	G7
Stroke	S	mm	20-50
Backlash	$S_{backlash}$	mm	0,07
Efficiency	η_{lu}	%	80
Inertia @ 20 mm stroke	J	10^{-4} kgm^2	0,019
Inertia @ 50mm stroke	J	10^{-4} kgm^2	0,022
Weight @ 20 mm stroke	m	kg	0,5
Weight @ 50 mm stroke	m	kg	0,6
Environment			
Ambient temperature	$T_{ambient}$	°C	0~+50
Max. humidity	ϕ	–	90
Degree of protection	IP	–	54S

Performance diagram

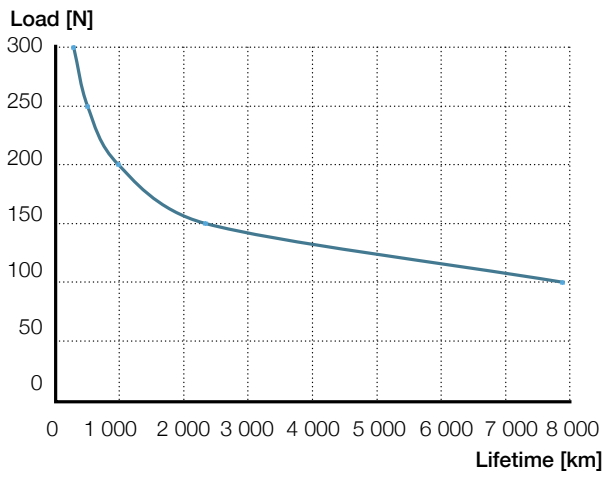

CASM-25

Servomotor, inline configuration

Technical data

Designation	Symbol	Unit	Servo motor MSMF5AZL1V1M
Performance Data			
Continuous force @ zero speed	F_{c0}	N	300
Continuous force @ max. speed	F_c	N	300
Peak force @ zero speed	F_{p0}	N	300
Peak force @ max. speed	F_p	N	300
Dynamic load capacity	C	N	2 042
Holding force	F_{hold}	N	600
Max. linear speed	V_{max}	mm/s	125
Max. acceleration	a_{max}	m/s^2	2,6
Duty cycles	D	%	100
Mechanical Data			
Screw type	–	–	Ball screw
Screw diameter	D_{screw}	mm	8
Screw lead	P_{screw}	mm	2,5
Lead accuracy	–	–	G7
Stroke	S	mm	20~50
Backlash	$S_{backlash}$	mm	0,07
Gear reduction	i	NA	1
Efficiency[1)]	η	%	72
Inertia @ 20 mm stroke	J	10^{-4} kgm^2	0,048
Inertia @ 50mm stroke	J	10^{-4} kgm^2	0,051
Weight @ 20 mm stroke	m	kg	1,1
Weight @ 50 mm stroke	m	kg	1,2
Environment			
Ambient temperature	$T_{ambient}$	°C	0~+50
Max. humidity	ϕ	%	90
Degree of protection	–	–	54S

[1)] Value not including drive efficiency

Dimensional drawing

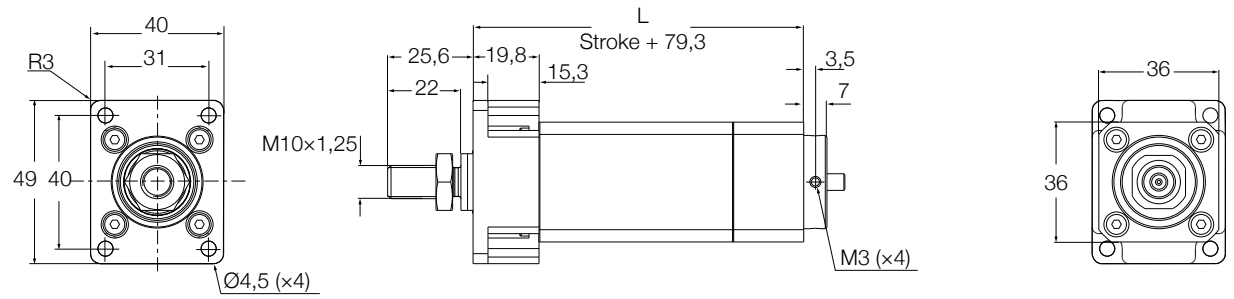

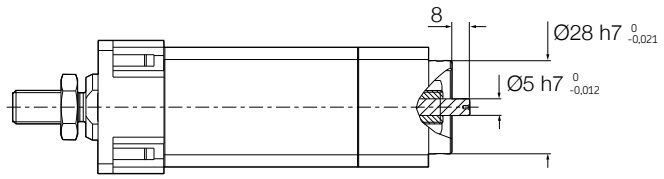

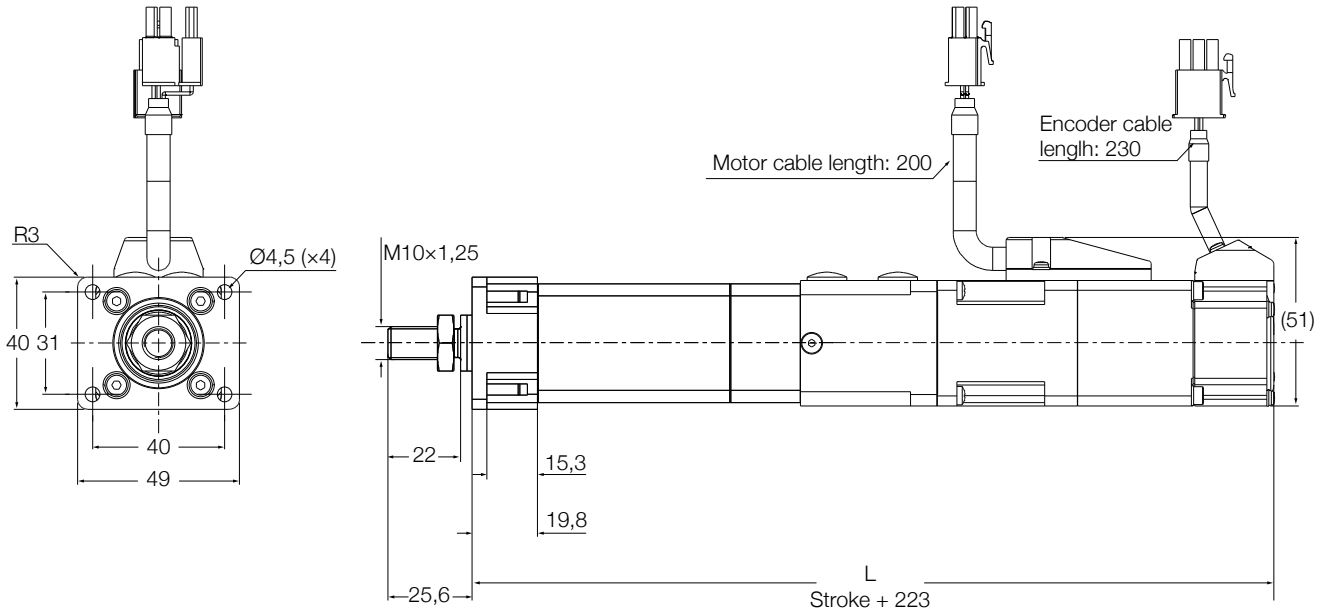

Ordering key

Linear units

C A S M - 2 5 - B S - ☐ ☐ ☐ ☐ - 0 0 0

Screw
BS 8x2,5

Stroke
020 mm
030 mm
040 mm
050 mm

Option[1)]
A Motor adapter and accessories separately delivery
B Motor, adapter and accessories pre-mounted

[1)] Motor, adapter kit and accessories need to be ordered separately

Motor and drive

	Ordering key	Model
Motor	M0112375	Panasonic MSMF5AZL1V1M
Drive	M0112381	Panasonic MADLT05SF
Motor interface	M0112374	Inline adapter
Motor	M0112375	Panasonic MSMF5AZL1V1M
Drive	M0112381	Panasonic MADLT05SF
Motor interface	M0112374	Inline adapter
Motor	M0112375	Panasonic MSMF5AZL1V1M
Drive	M0112381	Panasonic MADLT05SF
Motor interface	M0112374	Inline adapter

EWELLIX

Electric cylinders CASM-32/40/63

Features

- Modular cylinder system in three different sizes
- At least three different screws for each cylinder size
- Inline and parallel (belt) gearboxes
- Customized motor adapter plate
- Meets ISO-15552 standards
- High level of precision and repeatability
- Wide range of accessory parts

Benefits

- Optimal for a wide range of power and lifetime requirements
- Wide range of speed and force
- Mechanically fits most applications
- Fits most of brushless DC and servo motors
- Easy to replace pneumatic cylinders
- Accurate positioning (depending upon feedback system of the motor)
- Flexibility in mounting cylinders

Product description

CASM electric cylinders are ideally suited to perform fast and powerful linear movements. Unlike pneumatic or hydraulic cylinders, CASM electric cylinders are flexible and thus can be positioned precisely. In addition, due to a reduced number of components, the whole system is more cost effective, resulting in lower energy and maintenance costs.

The CASM modular concept enables easy connection to your preferred motor and control system. This can reduce design and programming costs considerably.

Thanks to high grade materials, a sealing system with IP54S level protection and high quality manufacturing, CASM electric cylinders can also be used long term even under adverse conditions.

The low backlash design provides positioning precision of up to ± 0,01 mm. Together with various screws for different speeds and forces, CASM electric cylinders are the optimum solution for a variety of applications.

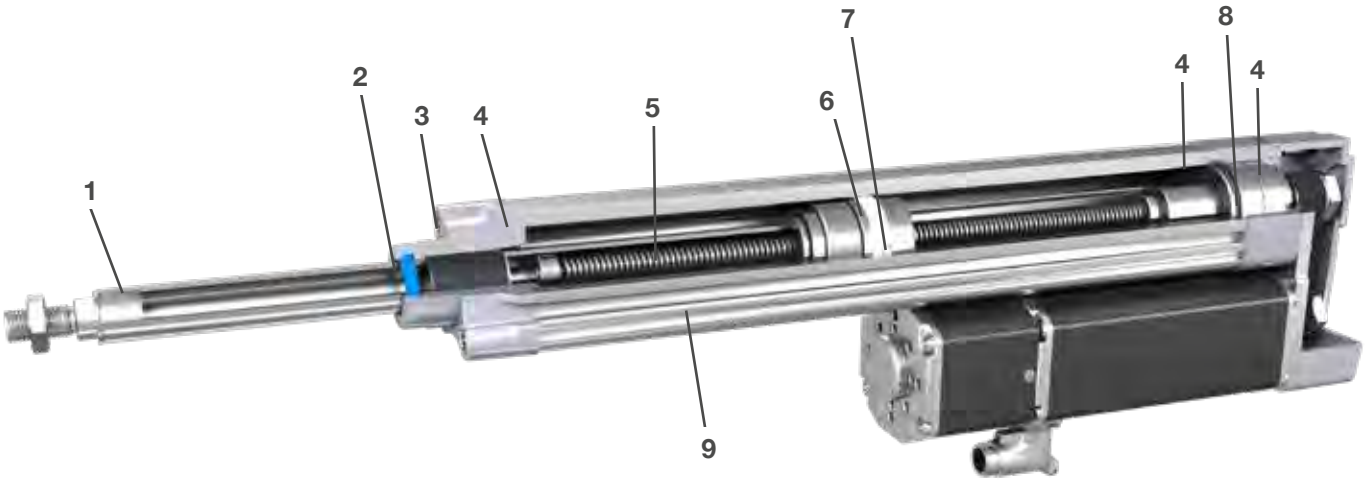

1. Stainless steel push tube
2. Shaft seal to protect against contaminants ingress
3. Sinter filter for high airflow
4. Flat seal between housings
5. High quality ball and lead screws with low axial play and low friction, lubricated for the whole product life
6. Magnet ring for proximity sensors
7. Anti-rotation device with overload protection
8. High-quality SKF bearings
9. Anodised aluminium profile with proximity sensor slots

Performance overview of linear units

Linear unit –	F_{max} kN	F_{0max} kN	V_{max} mm/s
CASM-32-LS	0,3	0,7	60
CASM-32-BS	0,7	0,7	150
CASM-32-BN	0,63	0,7	500
CASM-40-LS	0,6	1,5	70
CASM-40-BS	2,375	2,375	300
CASM-40-BN	1,55	2,375	826
CASM-63-LS	1	3,7	70
CASM-63-BS	5.4	5.4	300
CASM-63-BN	5,4	5,4	533
CASM-63-BF	2,8	5,4	1 067

Performance overview of actuators

Linear unit –	Motor –	Adapter –	F_{c0} kN	F_{p0} kN	V_{max} mm/s
CASM-32-LS	BG45	inline/parallel	0,300	0,300	60
CASM-32-LS	1FK7015	inline/parallel	0,300	0,300	60
CASM-32-BS	BG45	inline/parallel	0,393/0,389	0,700	150
CASM-32-BS	1FK7015	inline/parallel	0,549/0,544	0,700	150
CASM-32-BS	1FK7022	inline	0,700	0,700	150
CASM-32-BN	BG45	inline/parallel	0,132/0,131	0,497/0,492	500
CASM-32-BN	1FK7015	inline/parallel	0,185/0,183	0,528/0,523	500
CASM-32-BN	1FK7022	inline	0,449	0,630	500
CASM-40-LS	BG65S	inline/parallel	0,6/0,596	0,600	70
CASM-40-LS	1FK7022	inline/parallel	0,600	0,600	70
CASM-40-BS	BG65S	inline/parallel	0,673/0,666	1,805/1,787	298
CASM-40-BS	BG75	inline/parallel	1,239/1,227	2,375	300
CASM-40-BS	1FK7022	inline/parallel	0,908/0,899	2,375	300
CASM-40-BS	1FK7034	inline/parallel	1,709/1,692	2,375	300
CASM-40-BN	BG65S	inline/parallel	0,268/0,265	0,719/0,712	756
CASM-40-BN	BG75	inline/parallel	0,494/0,489	1,55/1,276	783
CASM-40-BN	1FK7022	inline/parallel	0,362/0,358	1,447/1,276	826
CASM-40-BN	1FK7034	inline/parallel	0,681/0,674	1,55/1,276	826
CASM-63-LS	BG75	inline/parallel	0,711/0,704	1,000	70
CASM-63-LS	1FK7034	inline/parallel	0,98/0,97	1,000	70
CASM-63-BS	BG75	inline/parallel	1,226	4,02	300
CASM-63-BS	1FK7034	inline/parallel	1,707	5,4	300
CASM-63-BS	1FK7044	inline	4,797	5.4	300
CASM-63-BN	BG75	inline/parallel	0,62/0,613	2,19/2,168	533
CASM-63-BN	1FK7034	inline/parallel	0,855/0,846	3,471/2,937	533
CASM-63-BN	1FK7044	inline	2,403	5,400	533
CASM-63-BF	BG75	inline/parallel	0,313/0,31	1,108/1,097	1 067
CASM-63-BF	1FK7034	inline/parallel	0,432/0,428	1,756/1,486	1 067
CASM-63-BF	1FK7044	inline	1,216	2,800	1 067

Motors and gearboxes

Servo motors

The Siemens motors provided by Ewellix come with a multi-pole resolver, a shaft-end with no keyway and a holding brake.In addition, they are equipped with a Drive-CLiQ interface. A rotating plug adapter simplifies the connection and cable routing in all installation positions. For more information, please visit the following sites:

Motors:
www.siemens.com/motors
Frequency converters:
www.siemens.com/sinamics
Automations systems:
www.siemens.com/simotion
Controls:
www.siemens.com/simatic
Engineering software:
www.siemens.com/sizer
Support worldwide:
www.siemens.de/service

Motor technical data

Motor type Designation	Unit	1FK7015-5AK71-1SH3	1FK7022-5AK71-1UH3	1FK7034-2AK71-1UH0	1FK7044-4CH71-1UH0
Rated power (100 K)	kW	0,1	0,43	0,63	1,41
Rated speed	min^{-1}	6 000	6 000	6 000	4 500
Rated current	A	0,85	1,4	1,3	4,9
Rated torque (100 K)	Nm	0,16	0,6	1	3
Static torque (100 K)	Nm	0,35	0,85	1,6	4
Peak torque	Nm	1	3,4	6,5	12
Inertia with brake	10^{-4} kgm^2	0,102	0,35	0,98	1,41
Shaft diameter	mm	8	9	14	19
Weight with brake	kg	1,2	2	4	8,3

Ordering key

Motor	CASM-32		CASM-40		CASM-63	
	Inline adapter	Parallel adapter	Inline adapter	Parallel adapter	Inline adapter	Parallel adapter
1FK7015-5AK-71-1SH3	ZBE-375530	ZBE-375540	–	–	–	–
1FK7022-5AK71-1UH3	ZBE-375537	–	ZBE-375538	ZBE-375546	–	–
1FK7034-2AK71-1UH0	–	–	ZBE-375545	ZBE-375603	ZBE-375544	ZBE-375543
1FK7044-4CH71-1UH0	–	–	–	–	ZBE-375535	–

Brushless DC motors

Brushless DC motors are perfectly suited to replace pneumatic cylinders in many applications. The motors provided by Ewellix are equipped with internal controllers and are very simple to set up. Connected to the power supply, the motors can be programmed by a computer with up to 14 motion profiles. The profiles can be activated by 2-4 binary inputs (PLC outputs or switches).

The internal encoders enable for high positioning accuracy while the internal brake secures the system in case of a power loss.

Motor technical data

Motor type Designation	Unit	BG45x30PI	BG65Sx50PI	BG75x75PI
Nominal voltage	V	24	40	40
Rated power	W	90	236	450
Rated speed	min^{-1}	3 360	3 570	3 700
Rated current	A	4,9	7	12,7
Rated torque	Ncm	25	169	116
Peak torque	Ncm	94,2	169	410
Inertia	gcm^2	44	129	652
Shaft diameter	mm	6	8	14
Weight with brake	kg	0,74	2,17	3,3

Ordering key

Motor	CASM-32		CASM-40		CASM-63	
	Inline adapter	Parallel adapter	Inline adapter	Parallel adapter	Inline adapter	Parallel adapter
BG45x30PI	ZBE-375570	ZBE-375573	–	–	–	–
BG65Sx50PI	–	–	ZBE-375571	ZBE-375574	–	–
BG75x75PI	–	–	ZBE-375579	ZBE-375578	ZBE-375572	ZBE-375575

Third party motors

In order to attach your preferred motor to the linear unit, Ewellix offers tailor made solutions within the specifications below.

For motor specifications which are not covered by the specifications below, please contact Ewellix.

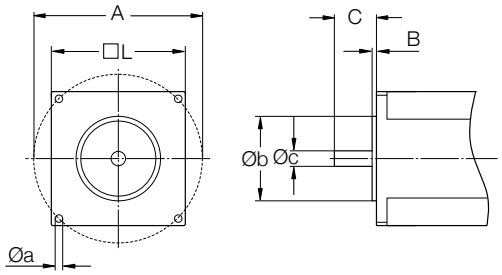

	CASM-32		CASM-40			CASM-63	
	Inline adapter	**Parallel adapter**	**Inline adapter**	**Parallel adapter**	**Parallel adapter**	**Inline adapter**	**Parallel adapter**
	M/0129709	**M/0130493**	**M/0129710**	**M/0130494**	**M/0130647**	**M/0129711**	**M/0130495**
Order #	mm	mm (in)	mm	mm (in)	mm	mm	mm
□ L	20…any value	20…47,5	40…any value	30…62	30…110	60…any value	30…86
Øb	31…75	15…32	31…75	20…44	20…65	47…95	20…65
B	1…7	1…10	1…5	1…3	1…4	1…5	1…4
ØA	36…106	19…49	36…106	24…68	24…89	52…103	24…89
Øc	6…14	6, 8, (1/4)	8…14	8, 9, (1/4), (3/8)	8, 11, 12, 13, 14	11…19	8, 11, 12, 13, 14
C	13…33	15…40	13…33	16…41	15…32	15…48	15…32

Inline interface

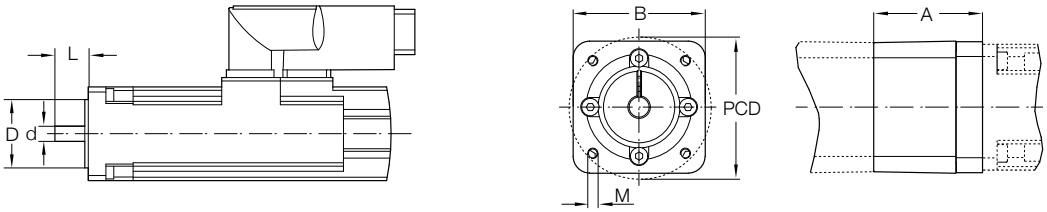

Interface	d	D	L	PCD	M	A	B	Torque max	Inertia	Weight
	mm					mm		Nm	$10^{-4}kgm^{-2}$	kg
CASM-32										
ZBE-375530	8	30	20	46	M4	40,9	46	2	0,006	0,25
ZBE-375537	9	40	20	64	M5	49,4	55	2	0,006	0,3
ZBE-375570	6	22	20	32	3,4	39,7	45,5	2	0,006	0,25
M/0129709	6…14	31…75	13…33	36…106	N/A	N/A	> 20	2	N/A	N/A
CASM-40										
ZBE-375538	9	40	20	63	M5	49,4	55	12	0,006	0,3
ZBE-375545	14	60	30	75	M6	52,4	72	12	0,006	0,3
ZBE-375571	8	32	25	45	5,5	53,5	54	12	0,006	0,3
ZBE-375579	14	32	30	45	5,3	52,4	75	12	0,006	0,3
M/0129710	8…14	31…75	13…33	36…106	N/A	N/A	> 40	12	N/A	N/A
CASM-63										
ZBE-375544	14	60	30	75	M6	62,4	75	25	0,200	0,35
ZBE-375535	19	80	40	100	M6	70,9	100	25	0,200	0,35
ZBE-375579	14	32	30	60	6,4	67,1	75	25	0,200	0,35
M/0129711	11…19	47…95	15…48	52…103	N/A	N/A	> 60	25	N/A	N/A

Parallel interface

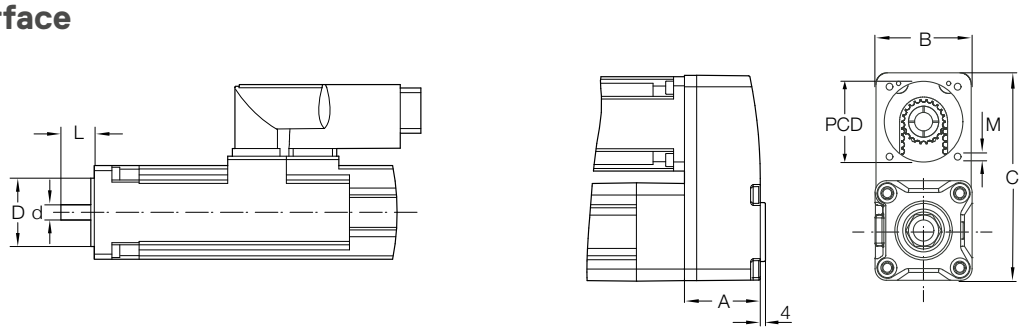

Interface	d	D	L	PCD	M	A	B	C	Torque max	Inertia	Weight
	mm (in)					mm			Nm	$10^{-4}kgm^{-2}$	kg
CASM-32											
ZBE-375540	8	30	20	46	M4	40,1	45,1	93,3	1	0,0016	0,35
ZBE-375573	6	22	20	32	3,4	39,5	45,1	93,3	1	0,0016	0,35
M/0130493	6, 8 (1/4")	15…32	15…40	19…49	N/A	N/A	20…47,5	93,3	1	N/A	N/A
CASM-40											
ZBE-375546	9	40	20	63	M5	47,1	56,6	115,3	3	0,0089	0,4
ZBE-375603	14	60	30	75	M6	58,1	74,1	157,3	3	0,0548	0,45
ZBE-375574	8	32	25	40	5,5	46,5	56,6	115,3	3	0,0089	0,4
ZBE-375578	14	32	30	45	5,3	58	74,1	156,6	3	0,0548	0,45
M/0130494	8, 9 (1/4", 3/8")	20…44	16…41	24…68	N/A	N/A	30…62	115,3	3	N/A	N/A
M/0130647	8, 11, 12, 13, 14	20…65	15…32	24…89	N/A	N/A	30…110	157,3	3	N/A	N/A
CASM-63											
ZBE-375543	14	60	30	75	M6	58,1	74,1	157,3	5,5	0,0548	0,45
ZBE-375575	14	32	30	60	6,4	39,5	45,1	157,3	5,5	0,0548	0,45
M/0130495	8, 11, 12, 13, 14	20…65	15…32	24…89	N/A	N/A	30…86	157,3	5,5	N/A	N/A

Manuals

Supporting documents are available for downloading on ewellix.com/casm in each product page under technical data section:

- operating manual
- mounting instruction

3D models

Product configurators for 3D models download are available on ewellix.com/casm, after selecting the desired actuator size

Operating manual

3D model configurator

CASM-32

Linear unit

Technical data

Designation	Symbol	Unit	CASM-32-LS	CASM-32-BS	CASM-32-BN
Performance Data					
Max. dynamic axial force	F_{max}	kN	0,3	0,7	0,63
Max. static axial force	F_{0max}	kN	0,7	0,7	0,7
Dynamic load capacity	C	kN	N/A	2,8	2,5
Maximum torque to reach F_{max}	M_{max}	Nm	0,24	0,45	1,19
Max. linear speed	v_{max}	mm/s	60	150	500
Max. rotational speed	n_{max}	1/min	2 400	3 000	3 000
Max. acceleration	a_{max}	m/s^2	1	6	6
Duty cycle	D_{unit}	%	60	100	100
Mechanical Data					
Screw type	–	–	Lead screw	Ball screw	Ball screw
Screw diameter	d_{screw}	mm	9	10	10
Screw lead	p_{screw}	mm	1,5	3	10
Lead accuracy	–	–	N/A	G7	G7
Stroke	s	mm	50…400	50…400	50…400
Internal overstroke each side	s_0	mm	1	1	1
Backlash	$s_{backlash}$	mm	N/A	0,06	0,06
Efficiency	η_{lu}	%	0,3	0,75	0,84
Inertia @ 0 mm stroke	J_{lu}	10^{-4} kgm^2	0,0413	0,0420	0,0420
Δ Inertia per 100 mm stroke	ΔJ	10^{-4} kgm^2	0,0036	0,0047	0,0047
Weight @ 0 mm stroke	m_{lu}	kg	0,74	0,74	0,74
Δ weight per 100 mm stroke	Δm	kg	0,34	0,34	0,34
Environment and Standards					
Ambient temperature	$T_{ambient}$	°C	0…+50	0…+50	0…+50
Max. humidity	ϕ	%	95	95	95
Degree of protection[1)]	IP	–	54S	54S	54S
Standard	–	–	ISO 15552	ISO 15552	ISO 15552

[1)] IP65S protection on request. Please contact Ewellix.

Dimensional drawing

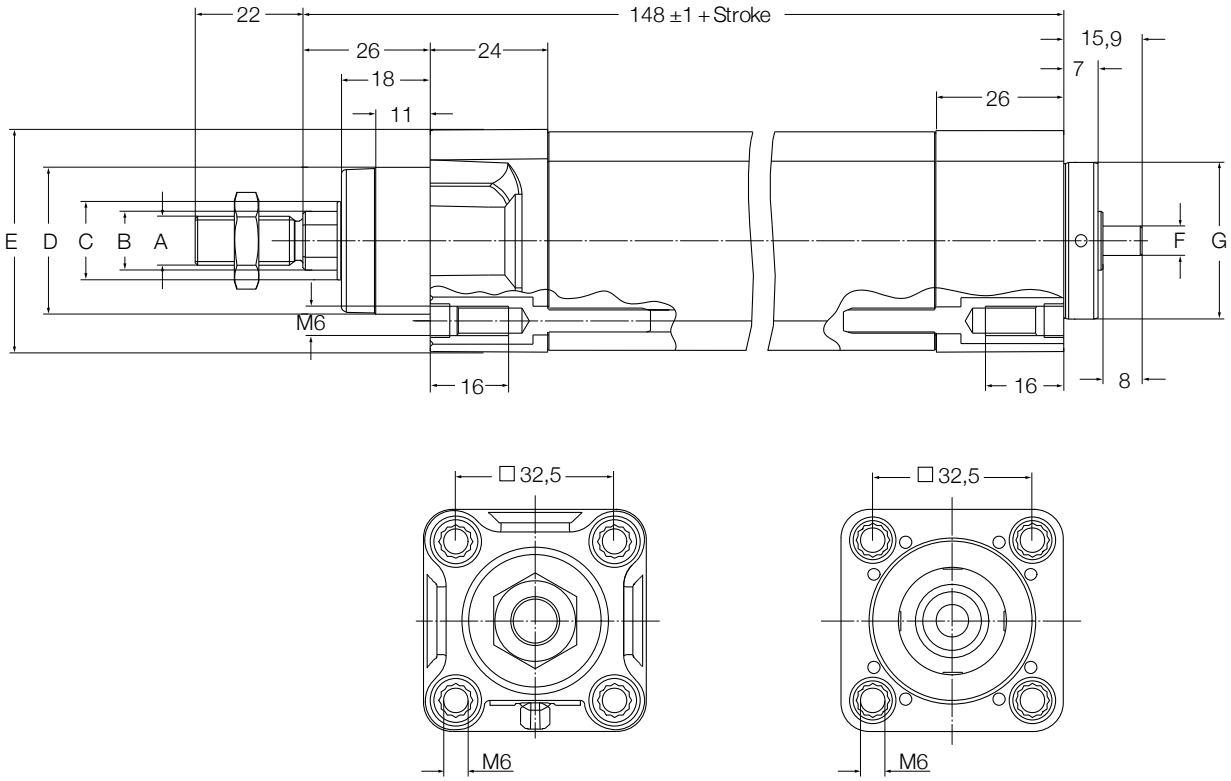

	A	B	C	D	E	F	G
		mm					
CASM-32	M10 × 1,25	Ø12	Ø16	Ø30d11	□45,7	Ø6h6	Ø32 $^{-0,05}_{-0,07}$

Performance diagrams

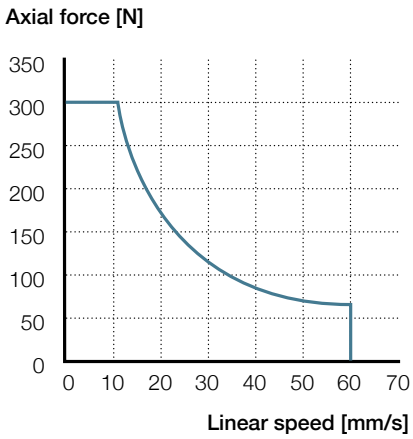

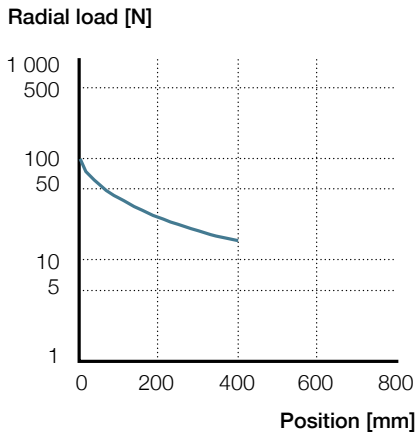

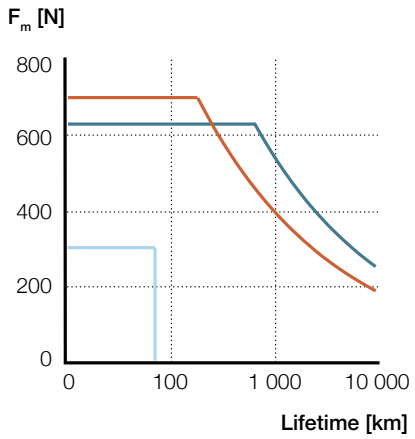

Valid only for CASM–32–LS.
No limitation for ball screw types
(max. load at max. speed).

The radial load acts perpendicular to
the moving direction.

CASM–32–BN
CASM–32–BS
CASM–32–LS

Ordering key

See **page 80**

CASM-40

Linear unit

Technical data

Designation	Symbol	Unit	CASM-40-LS	CASM-40-BS	CASM-40-BN
Performance Data					
Max. dynamic axial force	F_{max}	kN	0,6	2,375	1,55
Max. static axial force	F_{0max}	kN	1,5	2,375	2,375
Dynamic load capacity	C	kN	N/A	4,8	6
Maximum torque to reach F_{max}	M_{max}	Nm	0,63	2,22	3,64
Max. linear speed	v_{max}	mm/s	70	300	826
Max. rotational speed	n_{max}	1/min	1 680	3 600	3 900
Max. acceleration	a_{max}	m/s^2	1	6	6
Duty cycle	D_{unit}	%	60	100	100
Mechanical Data					
Screw type	–	–	Lead screw	Ball screw	Ball screw
Screw diameter	d_{screw}	mm	12,5	12	12,7
Screw lead	p_{screw}	mm	2,5	5	12,7
Lead accuracy	–	–	N/A	G7	G7
Stroke	s	mm	100…600	100…600	100…600
Internal overstroke each side	s_0	mm	1	1	1
Backlash	$s_{backlash}$	mm	N/A	0,07	0,07
Efficiency	η_{lu}	%	0,38	0,85	0,86
Inertia @ 0 mm stroke	J_{lu}	10^{-4} kgm^2	0,1262	0,1246	0,1279
Δ Inertia per 100 mm stroke	ΔJ	10^{-4} kgm^2	0,0123	0,0103	0,0144
Weight @ 0 mm stroke	m_{lu}	kg	1,25	1,26	1,29
Δ weight per 100 mm stroke	Δm	kg	0,46	0,46	0,46
Environment and Standards					
Ambient temperature	$T_{ambient}$	°C	0…+50	0…+50	0…+50
Max. humidity	ϕ	%	95	95	95
Degree of protection[1)]	IP	–	54S	54S	54S
Standards	–	–	ISO 15552	ISO 15552	ISO 15552

[1)] IP65S protection on request. Please contact Ewellix.

Dimensional drawing

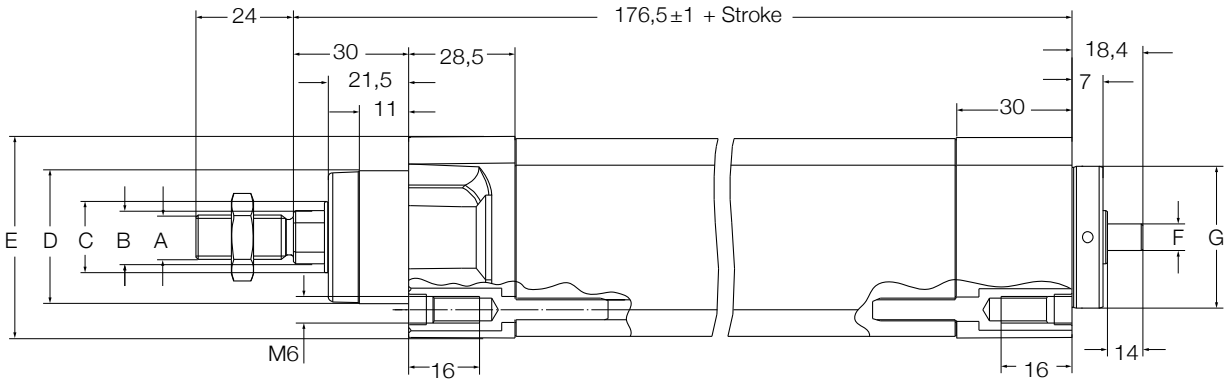

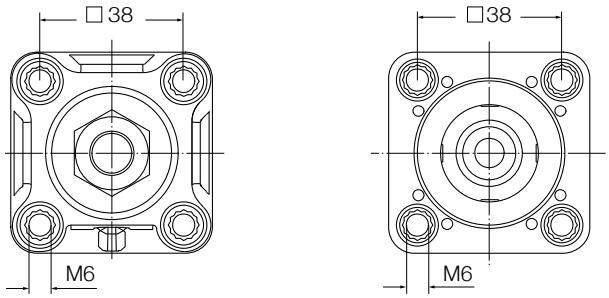

	A	B	C	D	E	F	G
		mm					
CASM-40	M12 × 1,25	Ø16	Ø20	Ø35d11	□54,3	Ø8h6	Ø40 $^{-0.08}_{-0.1}$

Performance diagrams

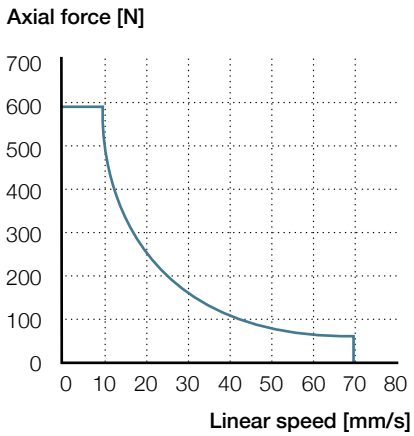

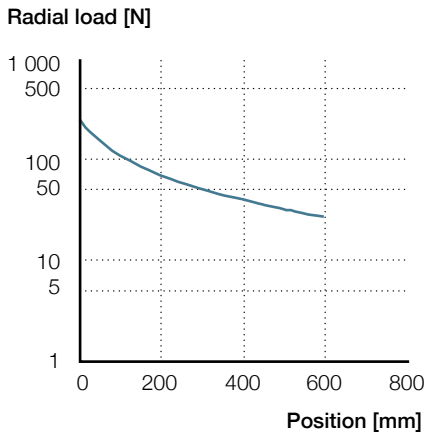

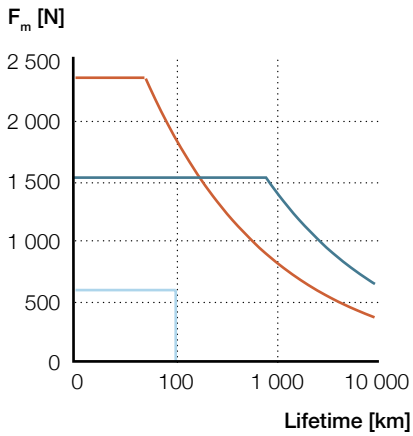

Valid only for CASM–40–LS.
No limitation for ball screw types
(max. load at max. speed).

The radial load acts perpendicular
to the moving direction.

CASM–40–LS CASM–40–BS
CASM–40–BN

Ordering key

See **page 80**

CASM-63

Linear unit

Technical data

Designation	Symbol	Unit	CASM-63-LS	CASM-63-BS	CASM-63-BN	CASM-63-BF
Performance Data						
Max. dynamic axial force	F_{max}	kN	1	5,4	5,4	2,8
Max. static axial force	F_{0max}	kN	3,7	5,4	5,4	5,4
Dynamic load capacity	C	kN	N/A	13,7	21	10
Maximum torque to reach F_{max}	M_{max}	Nm	1,63	5,06	10,11	10,36
Max. linear speed	v_{max}	mm/s	70	300	533	1 067
Max. rotational speed	n_{max}	1/min	1 050	3600	3 200	3 200
Max. acceleration	a_{max}	m/s^2	1	5	6	6
Duty cycle	D_{unit}	%	60	100	100	100
Mechanical Data						
Screw type	–	–	Lead screw	Ball screw	Ball screw	Ball screw
Screw diameter	d_{screw}	mm	20	20	20	20
Screw lead	p_{screw}	mm	4	5	10	20
Lead accuracy	–	–	N/A	G7	G7	G7
Stroke	s	mm	100…800	100…800	100…800	100…800
Internal overstroke each side	s_0	mm	1	1	1	1
Backlash	$s_{backlash}$	mm	N/A	0,07	0,07	0,07
Efficiency	η_{lu}	%	0,39	0,85	0,85	0,86
Inertia @ 0 mm stroke	J_{lu}	10^{-4} kgm^2	0,76	0,76	0,7600	0,7636
Δ Inertia per 100 mm stroke	ΔJ	10^{-4} kgm^2	0,0809	0,12	0,0809	0,0855
Weight @ 0 mm stroke	m_{lu}	kg	2,80	2,9	2,90	2,90
Δ weight per 100 mm stroke	Δm	kg	0,81	0,81	0,81	0,81
Environment and Standards						
Ambient temperature	$T_{ambient}$	°C	0…+50	0…+50	0…+50	0…+50
Max. humidity	ϕ	%	95	95	95	95
Degree of protection[1)]	IP	–	54S	54S	54S	54S
Standards	–	–	ISO 15552	ISO 15552	ISO 15552	ISO 15552

[1)] IP65S protection on request. Please contact Ewellix.

Dimensional drawing

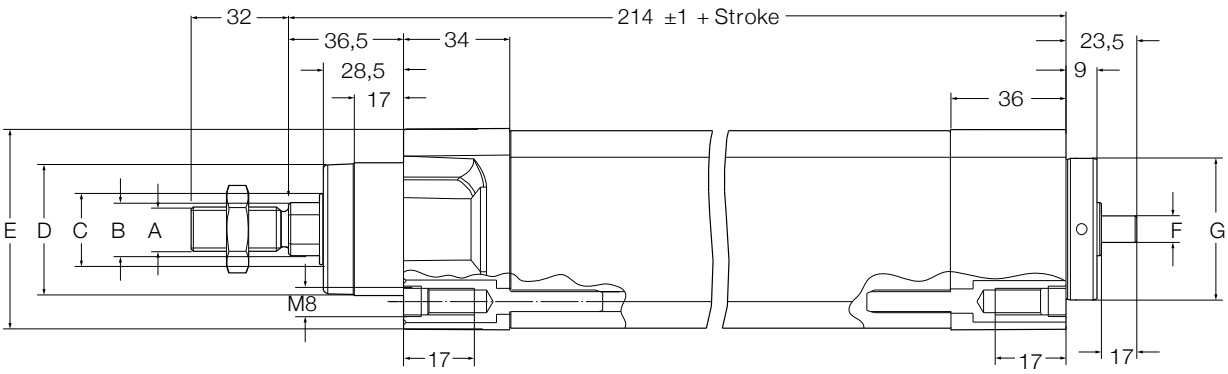

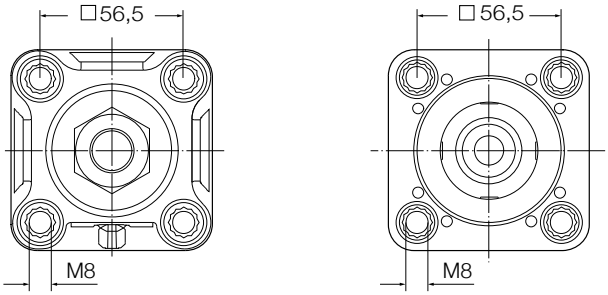

	A	B	C	D	E	F	G
		mm					
CASM-63	M16 × 1,5	Ø20	Ø28	Ø45d11	□75	Ø12h6	Ø60 $^{-0.05}_{-0.08}$

Performance diagrams

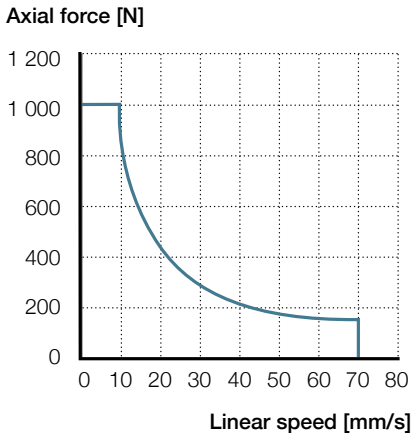

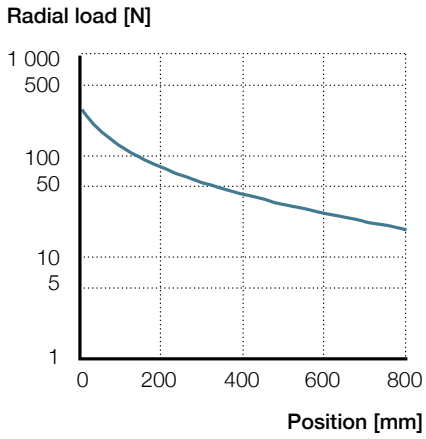

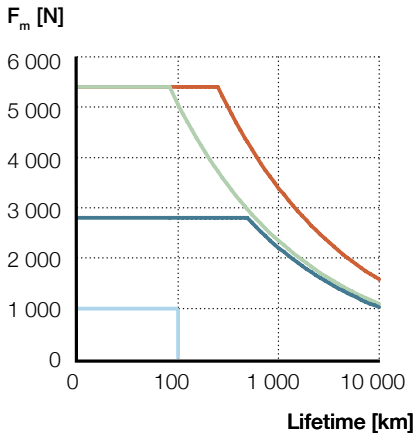

Valid only for CASM–63–LS.
No limitation for ball screw types
(max. load at max. speed).

The radial load acts
perpendicular to the moving
direction.

CASM–63–BF
CASM–63–BN
CASM–63–LS
CASM–63–BS

Ordering key

See **page 80**

Ordering key

Linear units

C A S M - 3 2 - B S - 0 3 0 0 A M - 0 0 0

Screw
LS Lead screw 9 × 1,5 mm
BS Ball screw 10 × 3 mm
BN Ball screw 10 × 10 mm

Stroke
50 mm
100 mm
150 mm
200 mm
300 mm
400 mm

Option[1)]
A Motor, adapter and accessories separately delivered
M Motor, adapter and foot mountings[2)] pre-mounted

Customer option
000 No option

C A S M - 4 0 - L S - 0 1 0 0 A A - 0 0 0

Screw
LS Lead screw 12,5 × 2,5 mm
BS Ball screw 12 × 5 mm
BN Ball screw 12,7 × 12,7 mm

Stroke
100 mm
200 mm
300 mm
400 mm
500 mm
600 mm

Option[1)]
A Motor, adapter and accessories separately delivered
M Motor, adapter and foot mountings[2)] pre-mounted

Customer option
000 No option

C A S M - 6 3 - B F - 0 7 0 0 A A - 0 0 0

Screw
LS Lead screw 20 × 4 mm
BS Ball screw 20 × 5 mm
BN Ball screw 20 × 10 mm
BF Ball screw 20 × 20 mm

Stroke
100 mm
200 mm
300 mm
400 mm
500 mm
600 mm
700 mm
800 mm

Option[1)]
A Motor, adapter and accessories separately delivered
M Motor, adapter and foot mountings[2)] pre-mounted

Customer option
000 No option

[1)] Motor, adapter kit and accessories need to be ordered separately
[2)] Foot mountings pre-mounted on inline version only

CASM-32-LS

Electric cylinder motor, inline configuration

Technical data

Designation	Symbol	Unit	BLDC motor BG45	Servo motor 1FK7015
Performance Data				
Continuous force @ zero speed	F_{c0}	kN	0,300	0,300
Continuous force @ max. speed	F_c	kN	0,047	0,047
Peak force @ zero speed	F_{p0}	kN	0,300	0,300
Peak force @ max. speed	F_p	kN	0,300	0,300
Dynamic load capacity	C	kN	N/A	N/A
Holding force (motorbrake option)	F_{Hold}	kN	0,700	0,700
Max. linear speed	v_{max}	mm/s	60	60
Max. acceleration	a_{max}	m/s^2	1	1
Duty cycle	D	%	60	60
Mechanical Data				
Screw type	–	–	Lead screw	Lead screw
Screw diameter	d_{screw}	mm	9	9
Screw lead	p_{screw}	mm	1,5	1,5
Lead accuracy	–	–	N/A	N/A
Stroke	s	mm	50…400	50…400
Internal overstroke each side	s_0	mm	1	1
Backlash	$s_{backlash}$	mm	N/A	N/A
Gear reduction	i	–	1	1
Efficiency	η	%	23	20
Inertia @ 0 mm stroke	J	10^{-4} kgm^2	0,0913	0,1303
Δ Inertia per 100 mm stroke	ΔJ	10^{-4} kgm^2	0,0036	0,0036
Inertia of optional brake	J_{brake}	10^{-4} kgm^2	0,0000	0,0190
Weight @ 0 mm stroke	m	kg	1,61	2,09
Δ weight per 100 mm stroke	Δm	kg	0,34	0,34
Weight of optional brake	m_{brake}	kg	0,12	0,10
Electrical Data				
Motor type	–	–	Brushless DC	Servo
Nominal voltage	U	V DC	24	N/A
Nominal current	I	A	4,9	1,0
Peak current	I_{peak}	A	15,0	1,6
Nominal power	P	kW	0,091	0,100
Environment and Standards				
Ambient temperature	$T_{ambient}$	°C	0…+50	0…+50
Degree of protection	IP	–	54S	54S
Standards	–	–	ISO 15552	ISO 15552

Ordering information

	BG45	1FK7015
Linear unit	see **page 74**	see **page 74**
Motor	BG45X30PI	1FZ7015-5AK71-1SH3
Adapter	ZBE-375570	ZBE-375530

For more information regarding motors and motor adapters, please visit **page 67**

Dimensional drawing

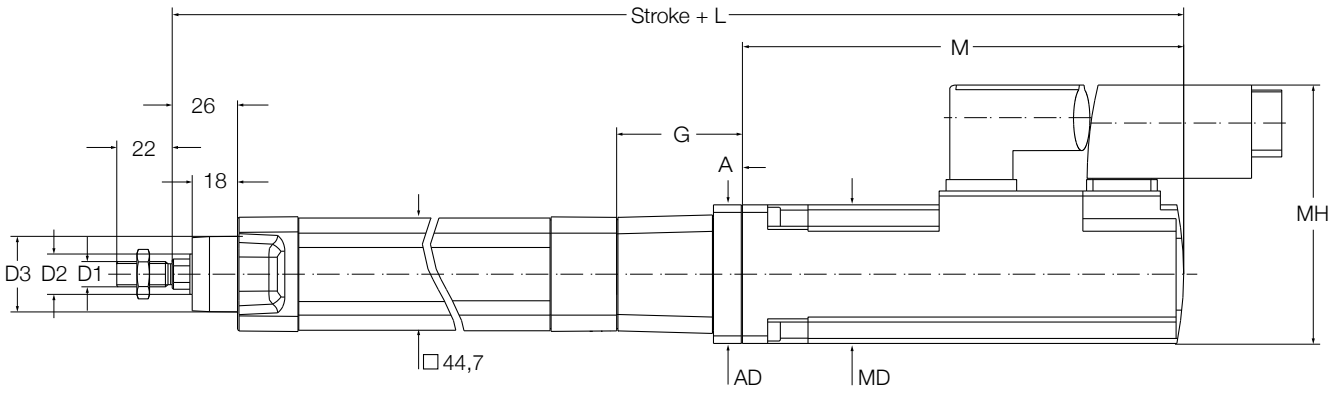

Motor	D1	D2	D3	L	G	A	AD	M	MD	MH
		mm								
BG45	M10 × 1,25	Ø16	Ø30	347,7	39,7	6,7	4,5	160	44	60,8
1FK7015	M10 × 1,25	Ø16	Ø30	353,9	40,9	9	40	165	40	86

Performance diagrams

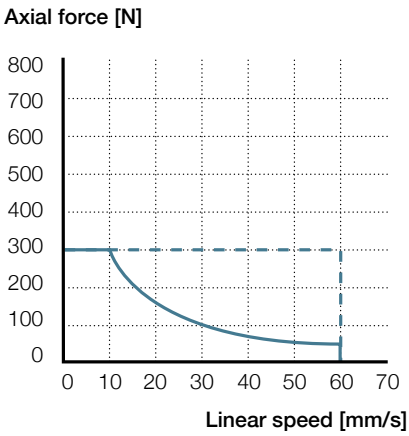

BG45 – 1FK7015
— F_{cont} - - F_{peak}

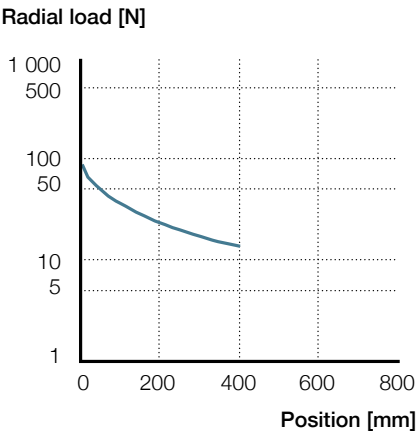

— CASM–32–LS

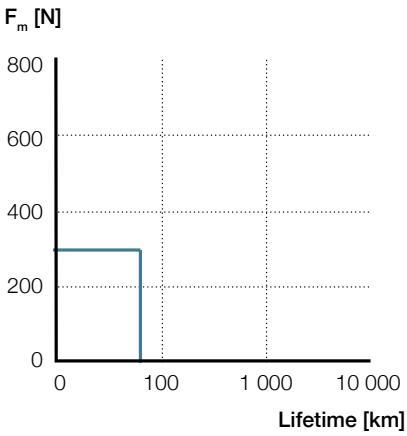

— CASM–32–LS

Ordering key

See **page 122**

CASM-32-LS

Electric cylinder motor, parallel configuration

Technical data

Designation	Symbol	Unit	BLDC motor BG45	Servo motor 1FK7015
Performance Data				
Continuous force @ zero speed	F_{c0}	kN	0,300	0,300
Continuous force @ max. speed	F_c	kN	0,047	0,047
Peak force @ zero speed	F_{p0}	kN	0,300	0,300
Peak force @ max. speed	F_p	kN	0,300	0,300
Dynamic load capacity	C	kN	N/A	N/A
Holding force (motorbrake option)	F_{Hold}	kN	0,700	0,700
Max. linear speed	v_{max}	mm/s	60	60
Max. acceleration	a_{max}	m/s^2	1	1
Duty cycle	D	%	60	60
Mechanical Data				
Screw type	–	–	Lead screw	Lead screw
Screw diameter	d_{screw}	mm	9	9
Screw lead	p_{screw}	mm	1,5	1,5
Lead accuracy	–	–	N/A	N/A
Stroke	s	mm	50…400	50…400
Internal overstroke each side	s_0	mm	1	1
Backlash	$s_{backlash}$	mm	N/A	N/A
Gear reduction	i	–	1	1
Efficiency	η	%	23	20
Inertia @ 0 mm stroke	J	10^{-4} kgm^2	0,0869	0,1259
Δ Inertia per 100 mm stroke	ΔJ	10^{-4} kgm^2	0,0036	0,0036
Inertia of optional brake	J_{brake}	10^{-4} kgm^2	0,0000	0,0190
Weight @ 0 mm stroke	m	kg	1,71	2,19
Δ weight per 100 mm stroke	Δm	kg	0,34	0,34
Weight of optional brake	m_{brake}	kg	0,12	0,10
Electrical Data				
Motor type	–	–	Brushless DC	Servo
Nominal voltage	U	V DC	24	n/a
Nominal current	I	A	4,9	1,0
Peak current	I_{peak}	A	15,0	1,6
Nominal power	P	kW	0,091	0,100
Environment and Standards				
Ambient temperature	$T_{ambient}$	°C	0…+50	0…+50
Degree of protection	IP	–	54S	54S
Standards	–	–	ISO 15552	ISO 15552

Ordering information

	BG45	1FK7015
Linear unit	see **page 74**	see **page 74**
Motor	BG45X30PI	1FZ7015-5AK71-1SH3
Adapter	ZBE-375573	ZBE-375540

For more information regarding motors and motor adapters, please visit **page 67**

Dimensional drawing

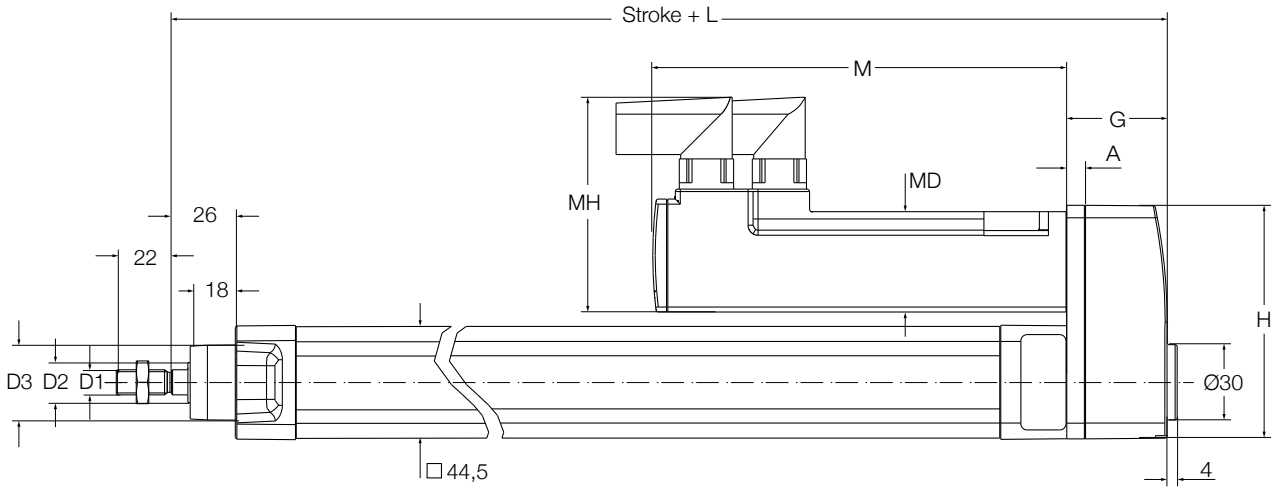

Motor	D1	D2	D3	L	G	A	H	M	MD	MH
		mm								
BG45	M10 × 1,25	Ø16	Ø30	187,5	39.5	7	93,3	160	44	60,8
1FK7015	M10 × 1,25	Ø16	Ø30	188,1	40.1	7	93,3	165	40	86

Performance diagrams

Axial force [N]

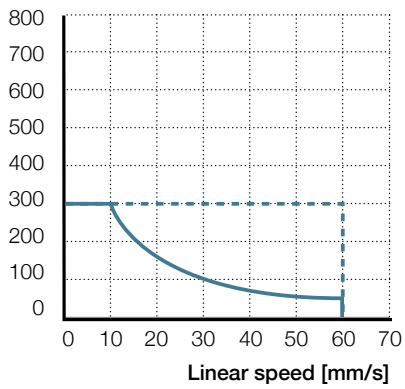

BG45 – 1FK7015

— F_{cont} - - F_{peak}

Radial load [N]

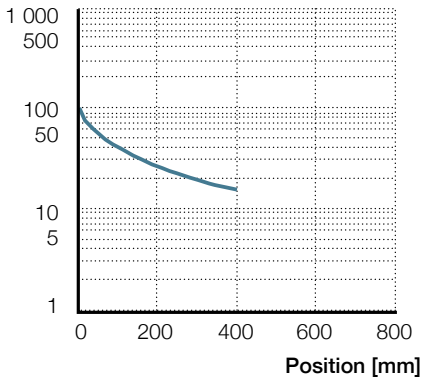

— CASM–32–LS

F_m [N]

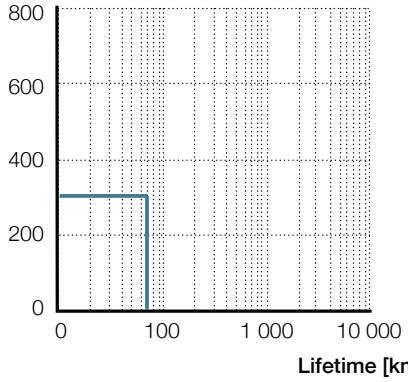

— CASM–32–LS

Ordering key

See **page 122**

CASM-32-BS

Electric cylinder motor, inline configuration

Technical data

Designation	Symbol	Unit	BLDC motor BG45	Servo motor 1FK7015	Servo motor 1FK7022
Performance Data					
Continuous force @ zero speed	F_{c0}	kN	0,393	0,550	0,700
Continuous force @ max. speed	F_c	kN	0,393	0,503	0,700
Peak force @ zero speed	F_{p0}	kN	0,700	0,700	0,700
Peak force @ max. speed	F_p	kN	0,603	0,700	0,700
Dynamic load capacity	C	kN	2,8	2,8	2,8
Holding force (motorbrake option)	F_{Hold}	kN	0,558	0,700	0,279
Max. linear speed	v_{max}	mm/s	150	150	150
Max. acceleration	a_{max}	m/s^2	6	6	6
Duty cycle	D	%	100	100	100
Mechanical Data					
Screw type	–	–	Ball screw	Ball screw	Ball screw
Screw diameter	d_{screw}	mm	10	10	10
Screw lead	p_{screw}	mm	3	3	3
Lead accuracy	–	–	G7	G7	G7
Stroke	s	mm	50…400	50…400	50…400
Internal overstroke each side	s_0	mm	1	1	1
Backlash	$s_{backlash}$	mm	0,06	0,06	0,06
Gear reduction	i	–	1	1	1
Efficiency	η	%	58	51	65
Inertia @ 0 mm stroke	J	10^{-4} kgm^2	0,0920	0,1310	0,3280
Δ Inertia per 100 mm stroke	ΔJ	10^{-4} kgm^2	0,0047	0,0047	0,0047
Inertia of optional brake	J_{brake}	10^{-4} kgm^2	0	0,0190	0,0700
Weight @ 0 mm stroke	m	kg	1,61	2,09	2,84
Δ weight per 100 mm stroke	Δm	kg	0,34	0,34	0,34
Weight of optional brake	m_{brake}	kg	0,12	0,10	0,20
Electrical Data					
Motor type	–	–	Brushless DC	Servo	Servo
Nominal voltage	U	V DC	24	N/A	N/A
Nominal current	I	A	4,9	1,0	1,4
Peak current	I_{peak}	A	15,0	1,6	1,8
Nominal power	P	kW	0,091	0,100	0,400
Environment and Standards					
Ambient temperature	$T_{ambient}$	°C	0…+50	0…+50	0…+50
Degree of protection	IP	–	54S	54S	54S
Standards	–	–	ISO 15552	ISO 15552	ISO 15552

Ordering information

	BG45	1FK7015	1FK7022
Linear unit	see **page 74**	see **page 74**	see **page 74**
Motor	BG45X30PI	1FZ7015-5AK71-1SH3	1FK7022-5AK71-1UH3
Adapter	ZBE-375570	ZBE-375530	ZBE-375537

For more information regarding motors and motor adapters, please visit **page 67**

Dimensional drawing

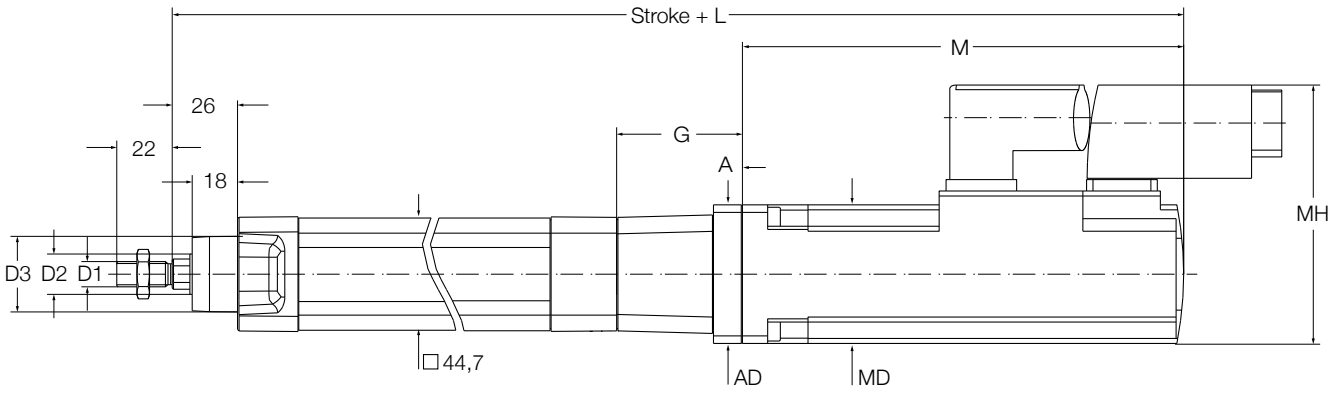

Motor	D1	D2	D3	L	G	A	AD	M	MD	MH
		mm								
BG45	M10 × 1,25	Ø16	Ø30	347,7	39,7	6,7	45,5	160	44	60,8
1FK7015	M10 × 1,25	Ø16	Ø30	353,9	40,9	9	40	165	40	86
1FK7022	M10 × 1,25	Ø16	Ø30	372,4	49,4	11	55	175	55	103

Performance diagrams

Axial force [N]

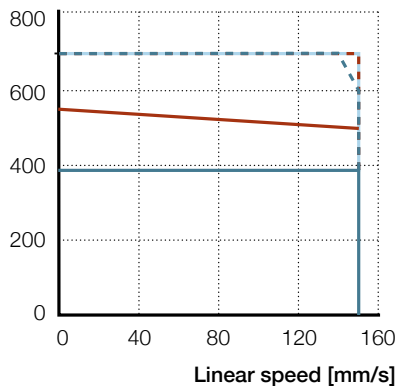

BG45 — F_{cont}, F_{peak}
1FK7015 — F_{cont}, F_{peak}
1FK7022 — F_{cont}, F_{peak}

Radial load [N]

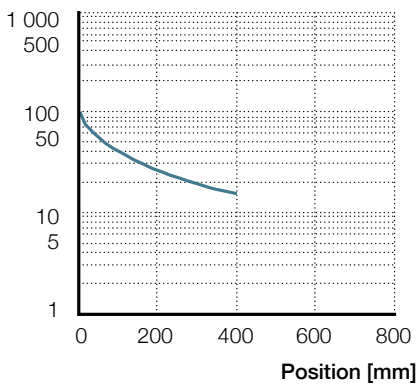

CASM–32–BS

F_m [N]

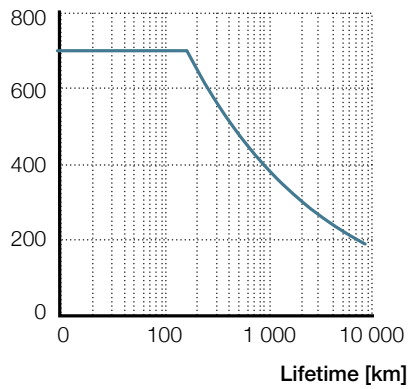

CASM–32–BS

Ordering key

See **page 122**

CASM-32-BS

Electric cylinder motor, parallel configuration

Technical data

Designation	Symbol	Unit	BLDC motor BG45	Servo motor 1FK7015
Performance Data				
Continuous force @ zero speed	F_{c0}	kN	0,389	0,544
Continuous force @ max. speed	F_c	kN	0,389	0,498
Peak force @ zero speed	F_{p0}	kN	0,700	0,700
Peak force @ max. speed	F_p	kN	0,597	0,700
Dynamic load capacity	C	kN	2,8	2,8
Holding force (motorbrake option)	F_{Hold}	kN	0,558	0,700
Max. linear speed	v_{max}	mm/s	150	150
Max. acceleration	a_{max}	m/s^2	6	6
Duty cycle	D	%	100	100
Mechanical Data				
Screw type	–	–	Ball screw	Ball screw
Screw diameter	d_{screw}	mm	10	10
Screw lead	p_{screw}	mm	3	3
Lead accuracy	–	–	G7	G7
Stroke	s	mm	50…400	50…400
Internal overstroke each side	s_0	mm	1	1
Backlash	$s_{backlash}$	mm	0,06	0,06
Gear reduction	i	–	1	1
Efficiency	η	%	57	50
Inertia @ 0 mm stroke	J	10^{-4} kgm^2	0,0875	0,1265
Δ Inertia per 100 mm stroke	ΔJ	10^{-4} kgm^2	0,0047	0,0047
Inertia of optional brake	J_{brake}	10^{-4} kgm^2	0,0000	0,019
Weight @ 0 mm stroke	m	kg	1,71	2,19
Δ weight per 100 mm stroke	Δm	kg	0,34	0,34
Weight of optional brake	m_{brake}	kg	0,12	0,1
Electrical Data				
Motor type	–	–	Brushless DC	Servo
Nominal voltage	U	V DC	24	N/A
Nominal current	I	A	4,9	1
Peak current	I_{peak}	A	15,0	1,6
Nominal power	P	kW	0,091	0,1
Environment and Standards				
Ambient temperature	$T_{ambient}$	°C	0…+50	0…+50
Degree of protection	IP	–	54S	54S
Standards	–	–	ISO 15552	ISO 15552

Ordering information

	BG45	1FK7015
Linear unit	see **page 74**	see **page 74**
Motor	BG45X30PI	1FZ7015-5AK71-1SH3
Adapter	ZBE-375573	ZBE-375540

For more information regarding motors and motor adapters, please visit **page 67**

Dimensional drawing

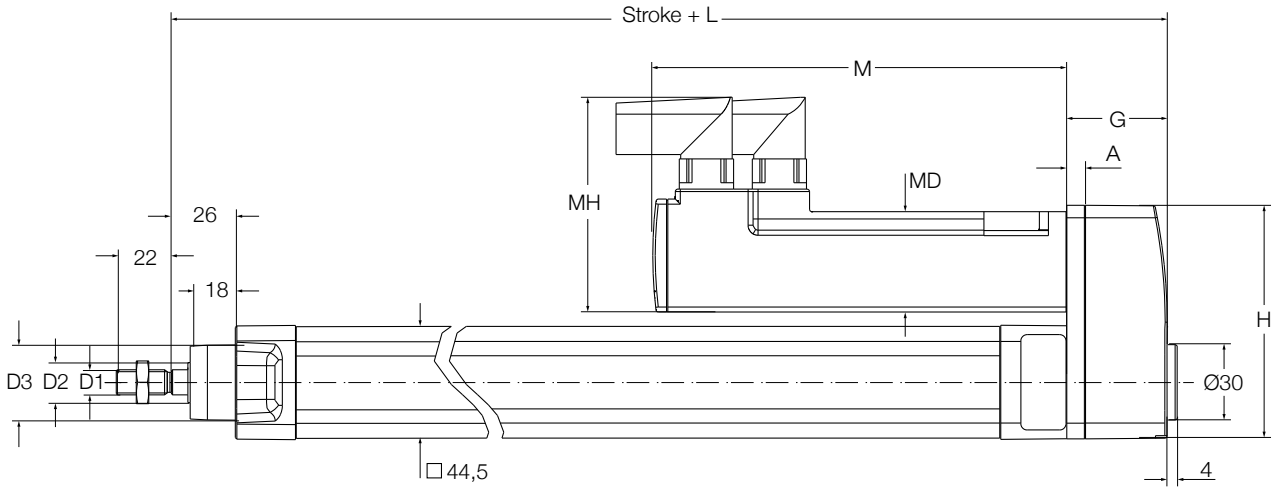

Motor	D1	D2	D3	L	G	A	H	M	MD	MH
		mm								
BG45	M10 × 1,25	Ø16	Ø30	187,5	39,5	7	93,3	160	44	60,8
1FK7015	M10 × 1,25	Ø16	Ø30	188,1	40,1	7	93,3	165	40	86

Performance diagrams

Axial force [N]

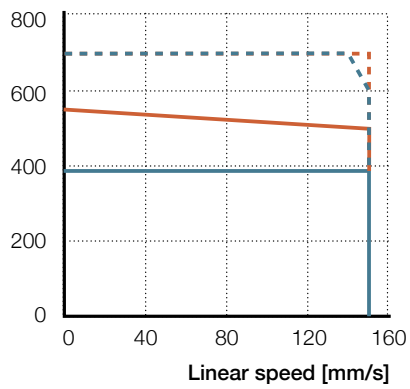

BG45 — F_{cont} - - F_{peak} 1FK7015 — F_{cont} - - F_{peak}

Radial load [N]

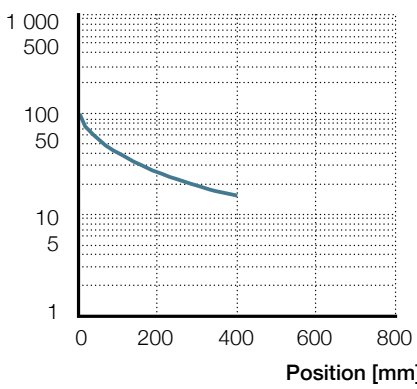

— CASM–32–BS

F_m [N]

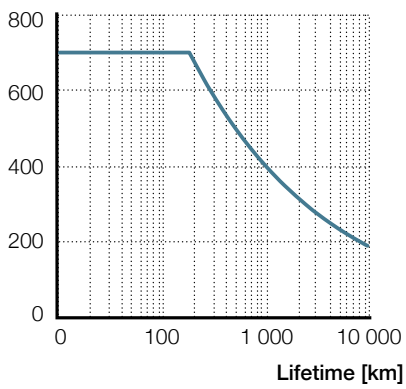

— CASM–32–BS

Ordering key

See **page 122**

CASM-32-BN

Electric cylinder motor, inline configuration

Technical data

Designation	Symbol	Unit	BLDC motor BG45	Servo motor 1FK7015	Servo motor 1FK7022
Performance Data					
Continuous force @ zero speed	F_{c0}	kN	0,132	0,185	0,449
Continuous force @ max. speed	F_c	kN	0,132	0,169	0,385
Peak force @ zero speed	F_{p0}	kN	0,497	0,528	0,630
Peak force @ max. speed	F_p	kN	0,203	0,528	0,630
Dynamic load capacity	C	kN	2,5	2,5	2,5
Holding force (motorbrake option)	F_{Hold}	kN	0,131	0,151	0,357
Max. linear speed	v_{max}	mm/s	500	500	500
Max. acceleration	a_{max}	m/s^2	6	6	6
Duty cycle	D	%	100	100	100
Mechanical Data					
Screw type	–	–	Ball screw	Ball screw	Ball screw
Screw diameter	d_{screw}	mm	10	10	10
Screw lead	p_{screw}	mm	10	10	10
Lead accuracy	–	–	G7	G7	G7
Stroke	s	mm	50…400	50…400	50…400
Internal overstroke each side	s_0	mm	1	1	1
Backlash	$s_{backlash}$	mm	0,06	0,06	0,06
Gear reduction	i	–	1	1	1
Efficiency	–	%	65	57	72
Inertia @ 0 mm stroke	J	10^{-4} kgm^2	0,0920	0,1310	0,3280
Δ Inertia per 100 mm stroke	ΔJ	10^{-4} kgm^2	0,0047	0,0047	0,0047
Inertia of optional brake	J_{brake}	10^{-4} kgm^2	0,0000	0,0190	0,0700
Weight @ 0 mm stroke	m	kg	1,61	2,09	2,84
Δ weight per 100 mm stroke	Δm	kg	0,34	0,34	0,34
Weight of optional brake	m_{brake}	kg	0,12	0,10	0,20
Electrical Data					
Motor type	–	–	Brushless DC	Servo	Servo
Nominal voltage	U	V DC	24	N/A	N/A
Nominal current	I	A	4,9	1,0	1,4
Peak current	I_{peak}	A	15,0	1,6	1,8
Nominal power	P	kW	0,091	0,100	0,400
Environment and Standards					
Ambient temperature	$T_{ambient}$	°C	0…+50	0…+50	0…+50
Degree of protection	IP	–	54S	54S	54S
Standards	–	–	ISO 15552	ISO 15552	ISO 15552

Ordering information

	BG45	1FK7015	1FK7022
Linear unit	see **page 74**	see **page 74**	see **page 74**
Motor	BG45X30PI	1FK7015-5AK71-1SH3	1FK7022-5AK71-1UH3
Adapter	ZBE-375570	ZBE-375530	ZBE-375537

For more information regarding motors and motor adapters, please visit **page 67**

Dimensional drawing

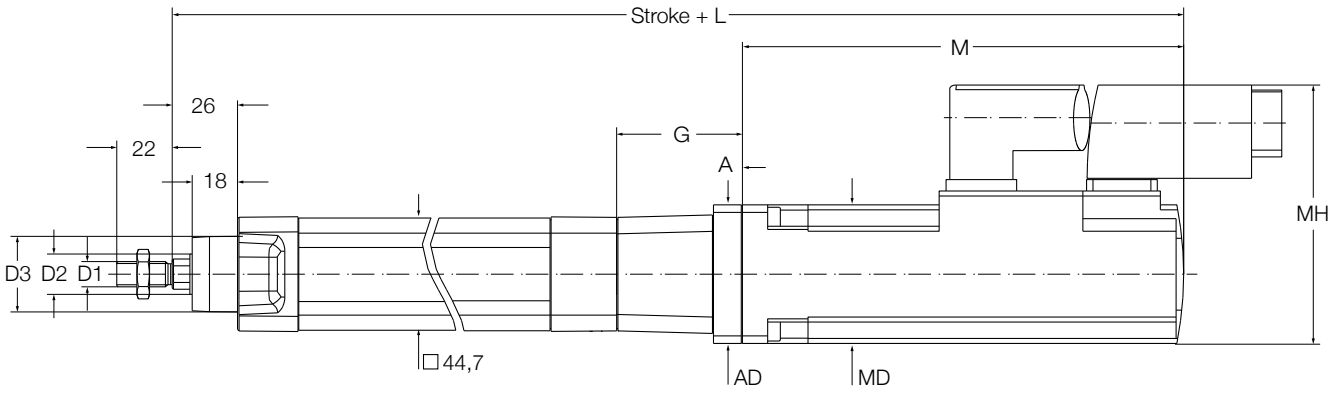

Motor	D1	D2	D3	L	G	A	AD	M	MD	MH
		mm								
BG45	M10 × 1,25	Ø16	Ø30	347,7	39,7	6,7	45,5	160	44	60,8
1FK7015	M10 × 1,25	Ø16	Ø30	353,9	40,9	9	40	165	40	86
1FK7022	M10 × 1,25	Ø16	Ø30	372,4	49,4	11	55	175	55	103

Performance diagrams

Axial force [N]

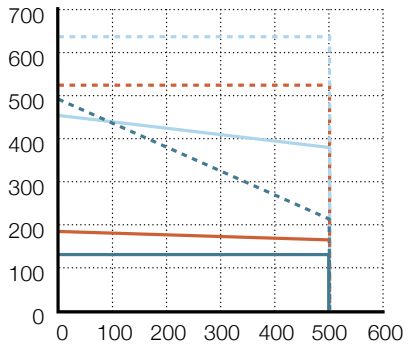

BG45 — F_{cont}, F_{peak}
1FK7015 — F_{cont}, F_{peak}
1FK7022 — F_{cont}, F_{peak}

Radial load [N]

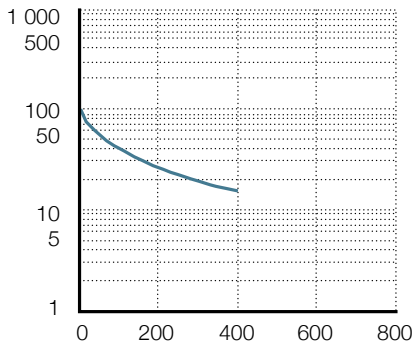

CASM–32–BN

F_m [N]

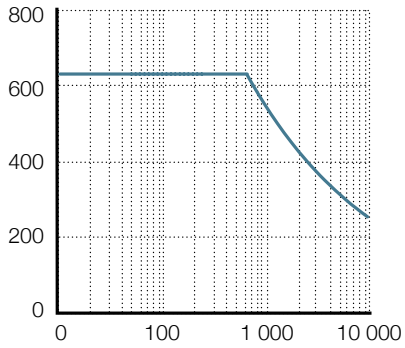

CASM–32–BN

Ordering key

See **page 122**

CASM-32-BN

Electric cylinder motor, parallel configuration

Technical data

Designation	Symbol	Unit	BLDC motor BG45	Servo motor 1FK7015
Performance Data				
Continuous force @ zero speed	F_{c0}	kN	0,131	0,183
Continuous force @ max. speed	F_c	kN	0,131	0,167
Peak force @ zero speed	F_{p0}	kN	0,492	0,523
Peak force @ max. speed	F_p	kN	0,201	0,523
Dynamic load capacity	C	kN	2,5	2,5
Holding force (motorbrake option)	F_{Hold}	kN	0,131	0,151
Max. linear speed	v_{max}	mm/s	500	500
Max. acceleration	a_{max}	m/s^2	6	6
Duty cycle	D	%	100	100
Mechanical Data				
Screw type	–	–	Ball screw	Ball screw
Screw diameter	d_{screw}	mm	10	10
Screw lead	p_{screw}	mm	10	10
Lead accuracy	–	–	G7	G7
Stroke	s	mm	50…400	50…400
Internal overstroke each side	s_0	mm	1	1
Backlash	$s_{backlash}$	mm	0,06	0,06
Gear reduction	i	–	1	1
Efficiency	η	%	64	57
Inertia @ 0 mm stroke	J	10^{-4} kgm^2	0,0875	0,1265
Δ Inertia per 100 mm stroke	ΔJ	10^{-4} kgm^2	0,0047	0,0047
Inertia of optional brake	J_{brake}	10^{-4} kgm^2	0,0000	0,0190
Weight @ 0 mm stroke	m	kg	1,71	2,19
Δ weight per 100 mm stroke	Δm	kg	0,34	0,34
Weight of optional brake	m_{brake}	kg	0,12	0,10
Electrical Data				
Motor type	–	–	Brushless DC	Servo
Nominal voltage	U	V DC	24	N/A
Nominal current	I	A	4,9	1,0
Peak current	I_{peak}	A	15,0	1,6
Nominal power	P	kW	0,091	0,100
Environment and Standards				
Ambient temperature	$T_{ambient}$	°C	0…+50	0…+50
Degree of protection	IP	–	54S	54S
Standards	–	–	ISO 15552	ISO 15552

Ordering information

	BG45	1FK7015
Linear unit	see **page 74**	see **page 74**
Motor	BG45X30PI	1FK7015-5AK71-1SH3
Adapter	ZBE-375573	ZBE-375540

For more information regarding motors and motor adapters, please visit **page 67**

Dimensional drawing

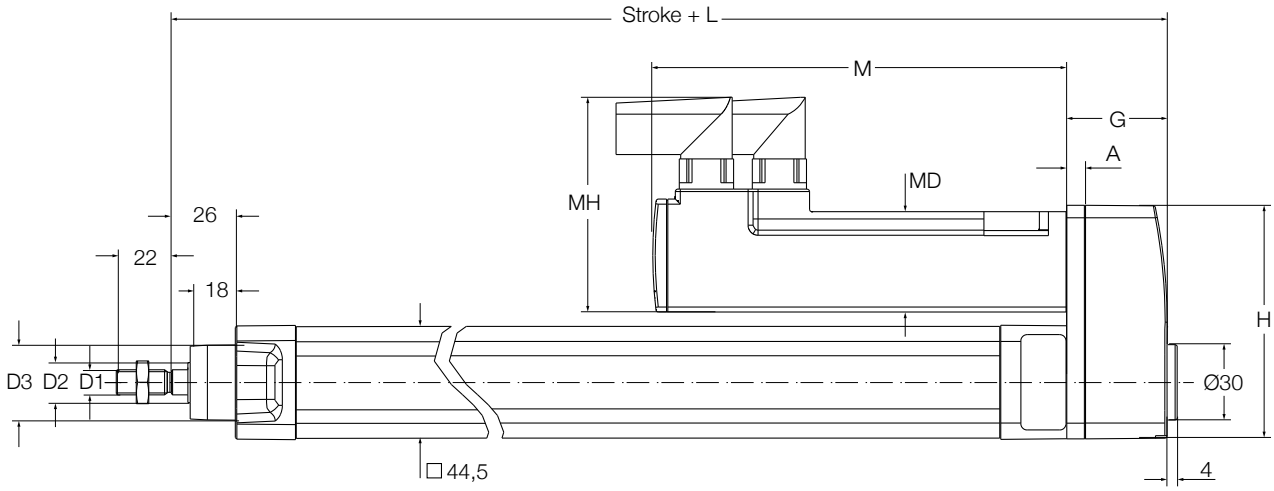

Motor	D1	D2	D3	L	G	A	H	M	MD	MH
		mm								
BG45	M10 × 1,25	Ø16	Ø30	187,5	39,5	7	93,3	160	44	60,8
1FK7015	M10 × 1,25	Ø16	Ø30	188,1	40,1	7	93,3	165	40	86

Performance diagrams

Axial force [N]

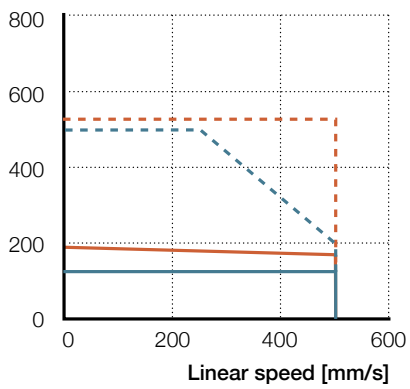

Radial load [N]

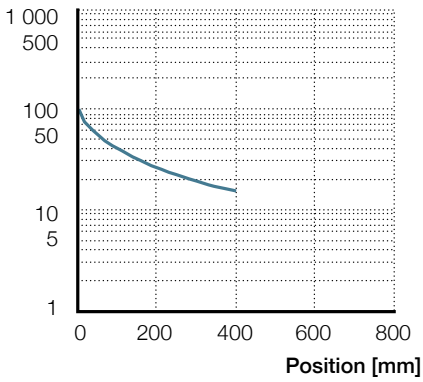

F_m [N]

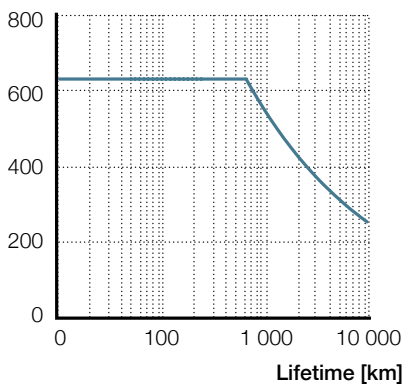

BG45 — F_{cont} — F_{peak} 1FK7015 — F_{cont} — F_{peak}

CASM–32–BN

CASM–32–BN

Ordering key

See **page 122**

CASM-40-LS

Electric cylinder motor, inline configuration

Technical data

Designation	Symbol	Unit	BLDC motor BG65S	Servo motor 1FK7022
Performance Data				
Continuous force @ zero speed	F_{c0}	kN	0,600	0,600
Continuous force @ max. speed	F_c	kN	0,071	0,071
Peak force @ zero speed	F_{p0}	kN	0,600	0,600
Peak force @ max. speed	F_p	kN	0,600	0,600
Dynamic load capacity	C	kN	N/A	N/A
Holding force (motorbrake option)	F_{Hold}	kN	–	–
Max. linear speed	v_{max}	mm/s	70	70
Max. acceleration	a_{max}	m/s^2	1	1
Duty cycle	D	%	60	60
Mechanical Data				
Screw type	–	–	Lead screw	Lead screw
Screw diameter	d_{screw}	mm	12,5	12,5
Screw lead	p_{screw}	mm	2,5	2,5
Lead accuracy	–	–	N/A	N/A
Stroke	s	mm	100…600	100…600
Internal overstroke each side	s_0	mm	1	1
Backlash	$s_{backlash}$	mm	N/A	N/A
Gear reduction	i	–	1	1
Efficiency	η	%	32	33
Inertia @ 0 mm stroke	J	10^{-4} kgm^2	0,2612	0,4122
Δ Inertia per 100 mm stroke	ΔJ	10^{-4} kgm^2	0,0123	0,0123
Inertia of optional brake	J_{brake}	10^{-4} kgm^2	0,0000	0,0700
Weight @ 0 mm stroke	m	kg	3,22	3,35
Δ weight per 100 mm stroke	Δm	kg	0,46	0,46
Weight of optional brake	m_{brake}	kg	0,50	0,20
Electrical Data				
Motor type	–	–	Brushless DC	Servo
Nominal voltage	U	V DC	40	N/A
Nominal current	I	A	7,0	1,4
Peak current	I_{peak}	A	20,0	1,8
Nominal power	P	kW	0,236	0,400
Environment and Standards				
Ambient temperature	$T_{ambient}$	°C	0…+50	0…+50
Degree of protection	IP	–	54S	54S
Standards	–	–	ISO 15552	ISO 15552

Ordering information

	BG65	1FK7022
Linear unit	see **page 76**	see **page 76**
Motor	BG65SX50PI	1FK7022-5AK71-1UH3
Adapter	ZBE-375571	ZBE-375538

For more information regarding motors and motor adapters, please visit **page 67**

Dimensional drawing

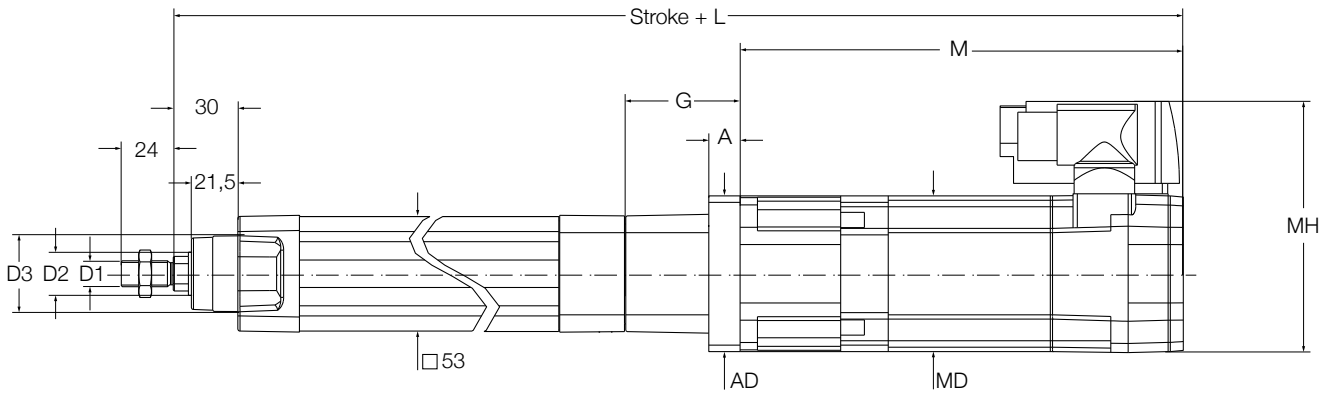

Motor	D1	D2	D3	L	G	A	AD	M	MD	MH
		mm								
BG65S	M12 × 1,25	Ø20	Ø35	431	53,5	35	54	201	65	96,5
1FK7022	M12 × 1,25	Ø20	Ø35	400,9	49,4	11	64	175	55	103

Performance diagrams

Axial force [N]

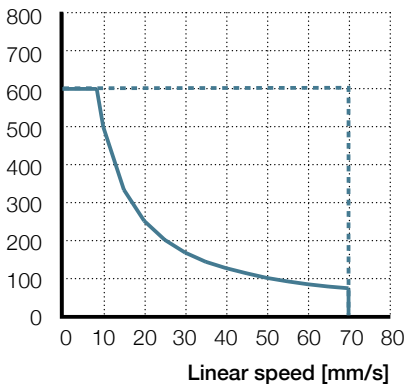

BG65S – 1FK7022

F_{cont} F_{peak}

Radial load [N]

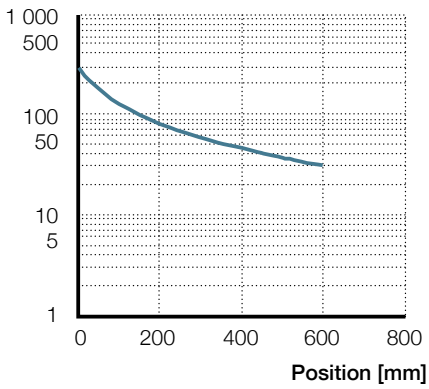

CASM-40-LS

F_m [N]

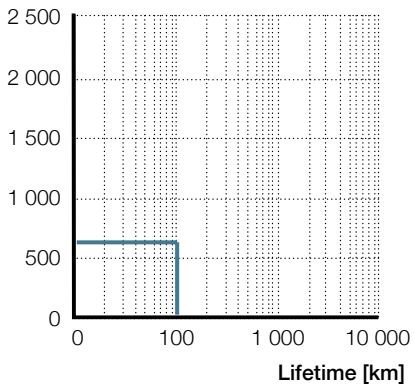

CASM–40–LS

Ordering key

See **page 122**

CASM-40-LS

Electric cylinder motor, parallel configuration

Technical data

Designation	Symbol	Unit	BLDC motor BG65S	Servo motor 1FK7022
Performance Data				
Continuous force @ zero speed	F_{c0}	kN	0,596	0,600
Continuous force @ max. speed	F_c	kN	0,071	0,071
Peak force @ zero speed	F_{p0}	kN	0,600	0,600
Peak force @ max. speed	F_p	kN	0,600	0,600
Dynamic load capacity	C	kN	N/A	N/A
Holding force (motorbrake option)	F_{Hold}	kN	–	–
Max. linear speed	v_{max}	mm/s	70	70
Max. acceleration	a_{max}	m/s^2	1	1
Duty cycle	D	%	60	60
Mechanical Data				
Screw type	–	–	Lead screw	Lead screw
Screw diameter	d_{screw}	mm	12,5	12,5
Screw lead	p_{screw}	mm	2,5	2,5
Lead accuracy	–	–	N/A	N/A
Stroke	s	mm	100…600	100…600
Internal overstroke each side	s_0	mm	1	1
Backlash	$s_{backlash}$	mm	N/A	N/A
Gear reduction	i	–	1	1
Efficiency	η	%	32	32
Inertia @ 0 mm stroke	J	10^{-4} kgm^2	0,2641	0,4151
Δ Inertia per 100 mm stroke	ΔJ	10^{-4} kgm^2	0,0123	0,0123
Inertia of optional brake	J_{brake}	10^{-4} kgm^2	0,0000	0,0700
Weight @ 0 mm stroke	m	kg	3,32	3,45
Δ weight per 100 mm stroke	Δm	kg	0,46	0,46
Weight of optional brake	m_{brake}	kg	0,50	0,20
Electrical Data				
Motor type	–	–	Brushless DC	Servo
Nominal voltage	U	V DC	40	N/A
Nominal current	I	A	7,0	1,4
Peak current	I_{peak}	A	20,0	1,8
Nominal power	P	kW	0,236	0,400
Environment and Standards				
Ambient temperature	$T_{ambient}$	°C	0…+50	0…+50
Degree of protection	IP	–	54S	54S
Standards	–	–	ISO 15552	ISO 15552

Ordering information

	BG655	1FK7022
Linear unit	see **page 76**	see **page 76**
Motor	BG65SX50PI	1FK7022-5AK71-1UH3
Adapter	ZBE-375574	ZBE-375546

For more information regarding motors and motor adapters, please visit **page 67**

Dimensional drawing

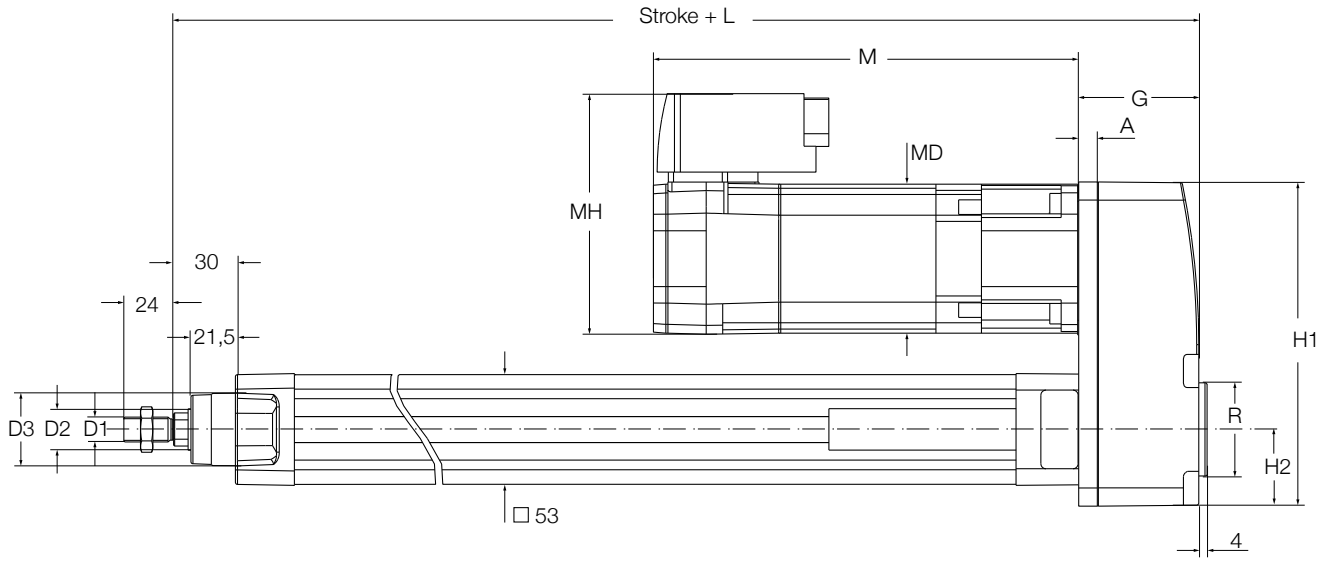

Motor	D1	D2	D3	L	G	A	H1	H2	M	MD	MH	R
		mm										
BG65S	M12 × 1,25	Ø20	Ø35	223	46,5	7	115,3	26,8	201	65	96,5	Ø35
1FK7022	M12 × 1,25	Ø20	Ø35	223,6	47,1	7	115,3	26,8	175	55	103	Ø35

Performance diagrams

Axial force [N]

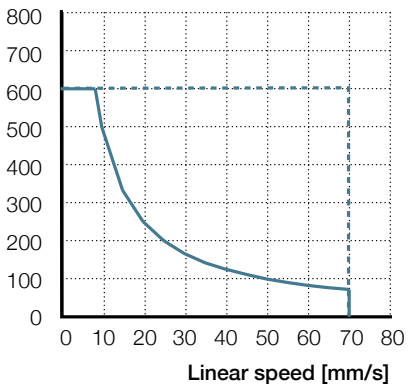

BG65S – 1FK7022

F_{cont} F_{peak}

Radial load [N]

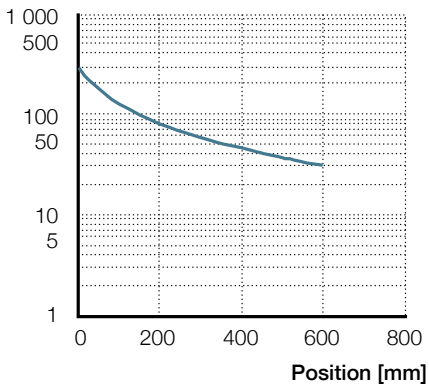

CASM–40–LS

F_m [N]

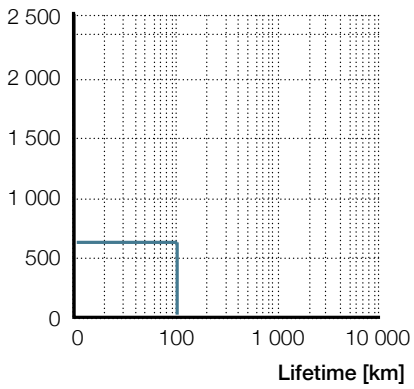

CASM–40–LS

Ordering key

See **page 122**

CASM-40-BS

Electric cylinder motor, inline configuration

Technical data

Designation	Symbol	Unit	BLDC motor BG65S	BLDC motor BG75	Servo motor 1FK7022	Servo motor 1FK7034
Performance Data						
Continuous force @ zero speed	F_{c0}	kN	0,673	1,239	0,908	1,709
Continuous force @ max. speed	F_c	kN	0,673	1,239	0,758	1,485
Peak force @ zero speed	F_{p0}	kN	1,805	2,375	2,375	2,375
Peak force @ max. speed	F_p	kN	0,673	1,453	2,375	2,375
Dynamic load capacity	C	kN	4,8	4,8	4,8	4,8
Holding force (motorbrake option)	F_{Hold}	kN	1,478	1,478	1,478	2,375
Max. linear speed	v_{max}	mm/s	298	300	300	300
Max. acceleration	a_{max}	m/s^2	6	6	6	6
Duty cycle	D	%	100	100	100	100
Mechanical Data						
Screw type	–	–	Ball screw	Ball screw	Ball screw	Ball screw
Screw diameter	d_{screw}	mm	12	12	12	12
Screw lead	p_{screw}	mm	5	5	5	5
Lead accuracy	–	–	G7	G7	G7	G7
Stroke	s	mm	100…600	100…600	100…600	100…600
Internal overstroke each side	s_0	mm	1	1	1	1
Backlash	$s_{backlash}$	mm	0,07	0,07	0,07	0,07
Gear reduction	i	–	1	1	1	1
Efficiency	η	%	72	77	73	75
Inertia @ 0 mm stroke	J	10^{-4} kgm^2	0,2596	0,7826	0,4106	1,0306
Δ Inertia per 100 mm stroke	ΔJ	10^{-4} kgm^2	0,0103	0,0103	0,0103	0,0103
Inertia of optional brake	J_{brake}	10^{-4} kgm^2	0	0,0000	0,0700	0,1000
Weight @ 0 mm stroke	m	kg	3,23	4,36	3,36	5,06
Δ weight per 100 mm stroke	Δm	kg	0,46	0,46	0,46	0,46
Weight of optional brake	m_{brake}	kg	0,5	0,50	0,20	0,40
Electrical Data						
Motor type	–	–	Brushless DC	Brushless DC	Servo	Servo
Nominal voltage	U	V DC	40	40	N/A	N/A
Nominal current	I	A	7	12,7	1,4	1,3
Peak current	I_{peak}	A	20	50,0	1,8	1,9
Nominal power	P	kW	0,236	0,450	0,400	0,600
Environment and Standards						
Ambient temperature	$T_{ambient}$	°C	0…+50	0…+50	0…+50	0…+50
Degree of protection	IP	–	54S	54S	54S	54S
Standards	–	–	ISO 15554	ISO 15555	ISO 15556	ISO 15557

Ordering information

	BG65	BG75	1FK7022	1FK7034
Linear unit	see **page 76**	see **page 76**	see **page 76**	see **page 76**
Motor	BG65SX50PI	BG75X75PI	1FK7022-5AK71-1UH3	1FK7034-2AK71-1UH0
Adapter	ZBE-375571	ZBE-375579	ZBE-375538	ZBE-375545

For more information regarding motors and motor adapters, please visit **page 67**

Dimensional drawing

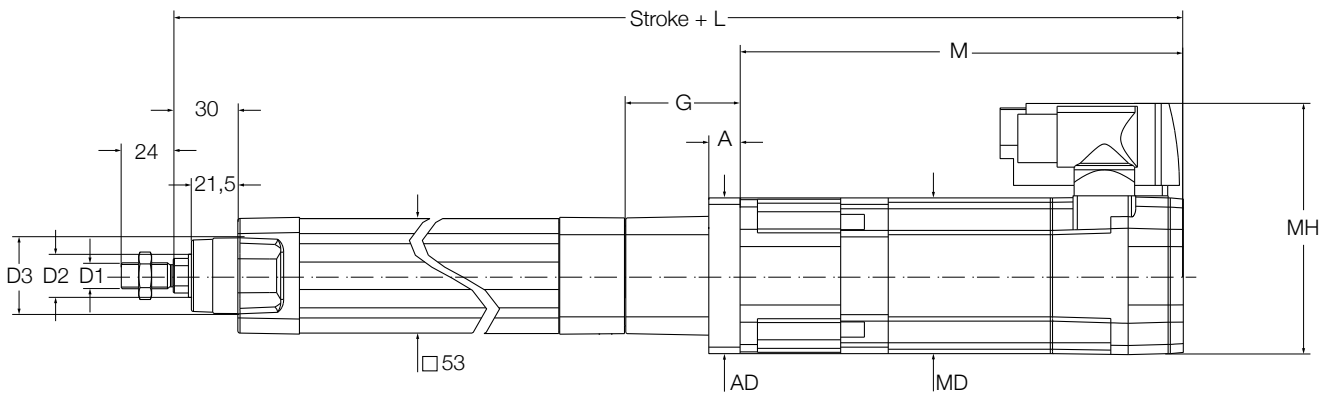

Motor	D1	D2	D3	L	G	A	AD	M	MD	MH
		mm								
BG65S	M12 × 1,25	Ø20	Ø35	431	53,5	35	54	201	65	96,5
BG75	M12 × 1,25	Ø20	Ø35	462,9	52,4	14	75	234	75	100
1FK7022	M12 × 1,25	Ø20	Ø35	400,9	49,4	11	64	175	55	103
1FK7034	M12 × 1,25	Ø20	Ø35	428,9	52,4	14	72	200	72	117

Performance diagrams

Axial force [N]

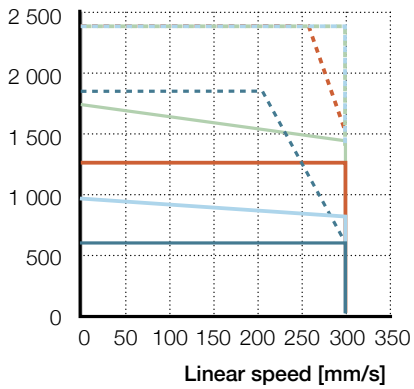

BG65S — F_{cont}, F_{peak}
BG75 — F_{cont}, F_{peak}
1FK7022 — F_{cont}, F_{peak}
1FK7034 — F_{cont}, F_{peak}

Radial load [N]

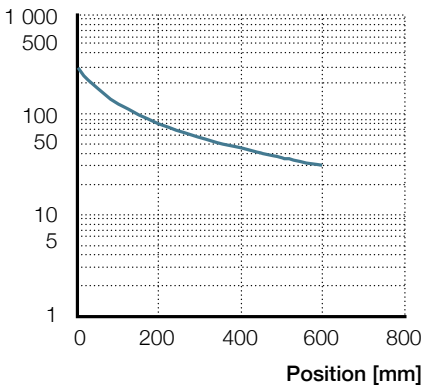

CASM–40–BS

F_m [N]

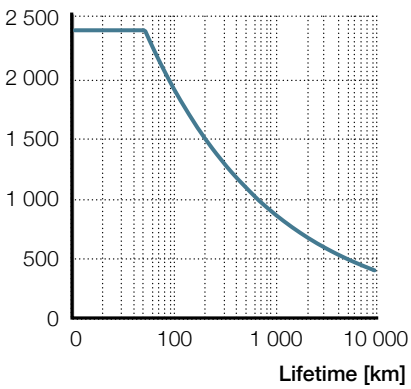

CASM–40–BS

Ordering key

See **page 122**

CASM-40-BS

Electric cylinder motor, parallel configuration

Technical data

Designation	Symbol	Unit	BLDC motor BG65S	BLDC motor BG75	Servo motor 1FK7022	Servo motor 1FK7034
Performance Data						
Continuous force @ zero speed	F_{c0}	kN	0,666	1,227	0,899	1,692
Continuous force @ max. speed	F_c	kN	0,666	1,227	0,751	1,47
Peak force @ zero speed	F_{p0}	kN	1,787	2,375	2,375	2,375
Peak force @ max. speed	F_p	kN	0,666	1,438	2,375	2,375
Dynamic load capacity	C	kN	4,8	4,8	4,8	4,8
Holding force (motorbrake option)	F_{Hold}	kN	1,478	1,478	1,478	2,375
Max. linear speed	v_{max}	mm/s	298	300	300	300
Max. acceleration	a_{max}	m/s^2	6	6	6	6
Duty cycle	D	%	100	100	100	100
Mechanical Data						
Screw type	–	–	Ball screw	Ball screw	Ball screw	Ball screw
Screw diameter	d_{screw}	mm	12	12	12	12
Screw lead	p_{screw}	mm	5	5	5	5
Lead accuracy	–	–	G7	G7	G7	G7
Stroke	s	mm	100…600	100…600	100…600	100…600
Internal overstroke each side	s_0	mm	1	1	1	1
Backlash	$s_{backlash}$	mm	0,07	0,07	0,07	0,07
Gear reduction	i	–	1	1	1	1
Efficiency	η	%	72	76	72	74
Inertia @ 0 mm stroke	J	10^{-4} kgm^2	0,2624	0,8314	0,4134	1,0794
Δ Inertia per 100 mm stroke	ΔJ	10^{-4} kgm^2	0,0103	0,0103	0,0103	0,0103
Inertia of optional brake	J_{brake}	10^{-4} kgm^2	0	0,0000	0,0700	0,1000
Weight @ 0 mm stroke	m	kg	3,33	4,51	3,46	5,21
Δ weight per 100 mm stroke	Δm	kg	0,46	0,46	0,46	0,46
Weight of optional brake	m_{brake}	kg	0,5	0,50	0,20	0,40
Electrical Data						
Motor type	–	–	Brushless DC	Brushless DC	Servo	Servo
Nominal voltage	U	V DC	40	40	N/A	N/A
Nominal current	I	A	7	12,7	1,4	1,3
Peak current	I_{peak}	A	20	50,0	1,8	1,9
Nominal power	P	kW	0,236	0,450	0,400	0,600
Environment and Standards						
Ambient temperature	$T_{ambient}$	°C	0…+50	0…+50	0…+50	0…+50
Degree of protection	IP	–	54S	54S	54S	54S
Standards	–	–	ISO 15558	ISO 15559	ISO 15560	ISO 15561

Ordering information

	BG65S	BG75	1FK7022	1FK7034
Linear unit	see **page 76**	see **page 76**	see **page 76**	see **page 76**
Motor	BG65SX50PI	BG75X75PI	1FK7022-5AK71-1UH3	1FK7034-2AK71-1UH0
Adapter	ZBE-375574	ZBE-375578	ZBE-375546	ZBE-375603

For more information regarding motors and motor adapters, please visit **page 67**

Dimensional drawing

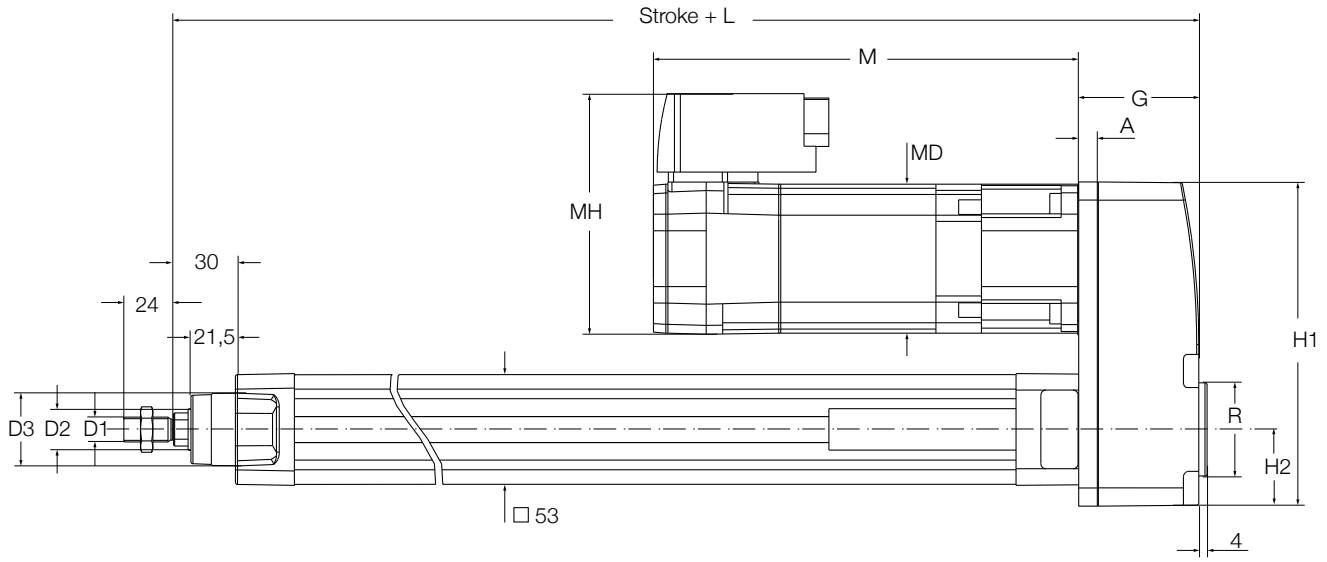

Motor	D1	D2	D3	L	G	A	H1	H2	M	MD	MH	R
		mm										
BG65S	M12 × 1,25	Ø20	Ø35	223	46,5	7	115,3	26,8	201	65	96,5	Ø35
BG75	M12 × 1,25	Ø20	Ø35	234,5	58	7	156,6	37,05	234	75	100	Ø45
1FK7022	M12 × 1,25	Ø20	Ø35	223,6	47,1	7	115,3	26,8	175	65	103	Ø35
1FK7034	M12 × 1,25	Ø20	Ø35	234,6	58,1	9	157,3	37,05	200	72	117	Ø45

Performance diagrams

Axial force [N]

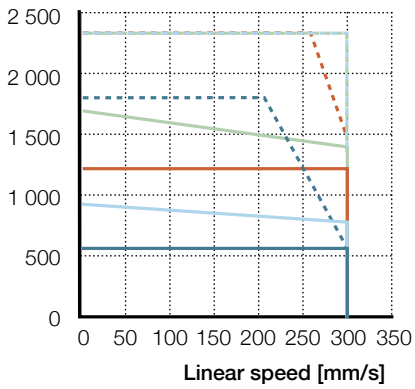

BG65S F_{cont} F_{peak} BG75 F_{cont} F_{peak} 1FK7022 F_{cont} F_{peak} 1FK7034 F_{cont} $F_{peak\ p}$

Radial load [N]

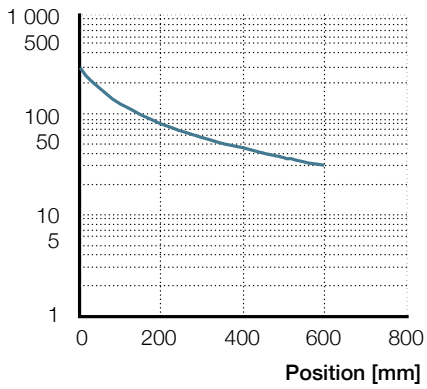

CASM–40–BS

F_m [N]

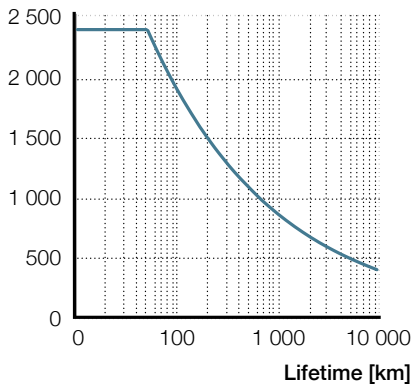

CASM–40–BS

Ordering key

See **page 122**

CASM-40-BN

Electric cylinder motor, inline configuration

Technical data

Designation	Symbol	Unit	BLDC motor BG65S	BLDC motor BG75	Servo motor 1FK7022	Servo motor 1FK7034
Performance Data						
Continuous force @ zero speed	F_{c0}	kN	0,268	0,494	0,362	0,681
Continuous force @ max. speed	F_c	kN	0,268	0,494	0,302	0,574
Peak force @ zero speed	F_{p0}	kN	0,719	1,550	1,447	1,550
Peak force @ max. speed	F_p	kN	0,268	0,494	1,447	1,550
Dynamic load capacity	C	kN	6	6	6	6
Holding force (motorbrake option)	F_{Hold}	kN	0,575	0,575	0,575	1,093
Max. linear speed	v_{max}	mm/s	756	783	826	826
Max. acceleration	a_{max}	m/s^2	6	6	6	6
Duty cycle	D	%	100	100	100	100
Mechanical Data						
Screw type	–	–	Ball screw	Ball screw	Ball screw	Ball screw
Screw diameter	d_{screw}	mm	12,7	12,7	12,7	12,7
Screw lead	p_{screw}	mm	12,7	12,7	12,7	12,7
Lead accuracy	–	–	G7	G7	G7	G7
Stroke	s	mm	100…600	100…600	100…600	100…600
Internal overstroke each side	s_0	mm	1	1	1	1
Backlash	$s_{backlash}$	mm	0,07	0,07	0,07	0,07
Gear reduction	i	–	1	1	1	1
Efficiency	η	%	73	77	74	76
Inertia @ 0 mm stroke	J	10^{-4} kgm^2	0,2629	0,7859	0,4139	1,0339
Δ Inertia per 100 mm stroke	ΔJ	10^{-4} kgm^2	0,0144	0,0144	0,0144	0,0144
Inertia of optional brake	J_{brake}	10^{-4} kgm^2	0	0,0000	0,0700	0,1000
Weight @ 0 mm stroke	m	kg	3,26	4,39	3,39	5,09
Δ weight per 100 mm stroke	Δm	kg	0,46	0,46	0,46	0,46
Weight of optional brake	m_{brake}	kg	0,5	0,50	0,20	0,4
Electrical Data						
Motor type	–	–	Brushless DC	Brushless DC	Servo	Servo
Nominal voltage	U	V DC	40	40	N/A	N/A
Nominal current	I	A	7	12,7	1,4	1,3
Peak current	I_{peak}	A	20	50,0	1,8	1,9
Nominal power	P	kW	0,236	0,450	0,400	0,600
Environment and Standards						
Ambient temperature	$T_{ambient}$	°C	0…+50	0…+50	0…+50	0…+50
Degree of protection	IP	–	54S	54S	54S	54S
Standards	–	–	ISO 15552	ISO 15552	ISO 15552	ISO 15552

Ordering information

	BG65S	BG75	1FK7022	1FK7034
Linear unit	see **page 76**	see **page 76**	see **page 76**	see **page 76**
Motor	BG65SX50PI	BG75X75PI	1FK7022-5AK71-1UH3	1FK7034-2AK71-1UH0
Adapter	ZBE-375571	ZBE-375579	ZBE-375538	ZBE-375545

For more information regarding motors and motor adapters, please visit **page 67**

Dimensional drawing

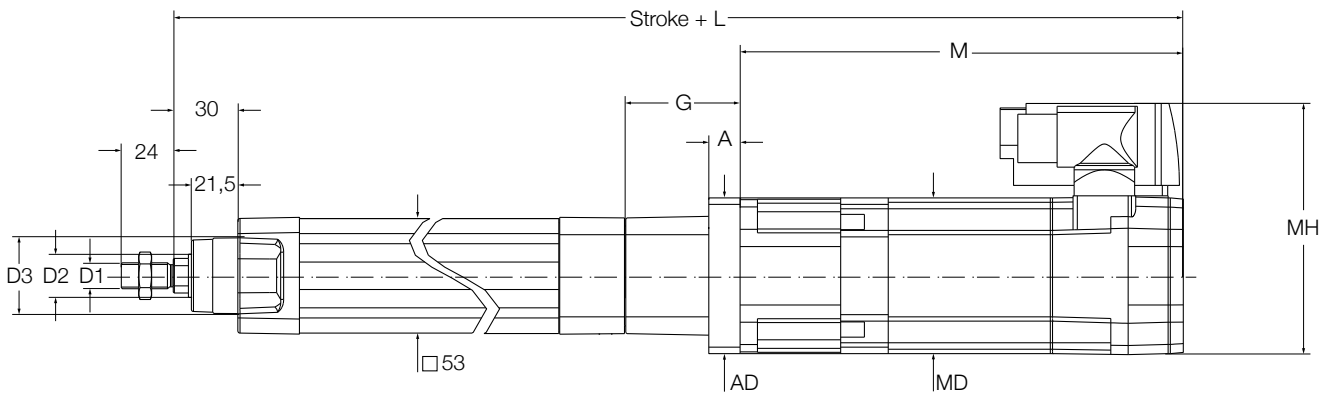

Motor	D1	D2	D3	L	G	A	AD	M	MD	MH
		mm								
BG65S	M12 × 1,25	Ø20	Ø35	431	53,5	35	54	201	65	96,5
BG75	M12 × 1,25	Ø20	Ø35	462,9	52,4	14	75	234	75	100
1FK7022	M12 × 1,25	Ø20	Ø35	400,9	49,4	11	64	175	55	103
1FK7034	M12 × 1,25	Ø20	Ø35	428,9	52,4	14	72	200	72	117

Performance diagrams

Axial force [N]

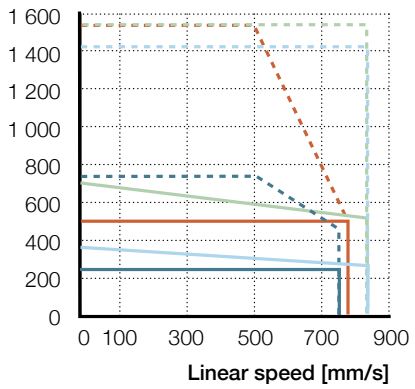

BG65S F_{cont} F_{peak} BG75 F_{cont} F_{peak} 1FK7022 F_{cont} F_{peak} 1FK7034 F_{cont} F_{peak}

Radial load [N]

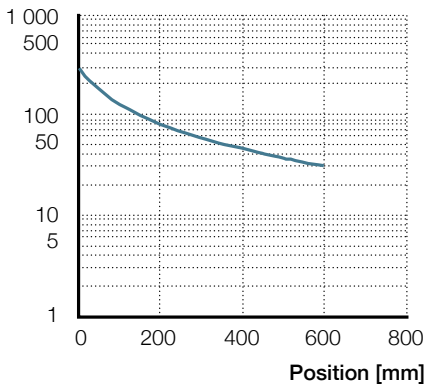

CASM–40–BN

F_m [N]

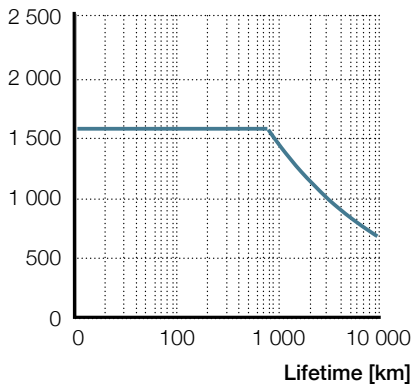

CASM–40–BN

Ordering key

See **page 122**

CASM-40-BN

Electric cylinder motor, parallel configuration

Technical data

Designation	Symbol	Unit	BLDC motor BG65S	BLDC motor BG75	Servo motor 1FK7022	Servo motor 1FK7034
Performance Data						
Continuous force @ zero speed	F_{c0}	kN	0,265	0,489	0,358	0,674
Continuous force @ max. speed	F_c	kN	0,265	0,489	0,299	0,569
Peak force @ zero speed	F_{p0}	kN	0,712	1,276	1,276	1,276
Peak force @ max. speed	F_p	kN	0,265	0,489	1,276	1,276
Dynamic load capacity	C	kN	6	6	6	6
Holding force (motorbrake option)	F_{Hold}	kN	0,575	0,575	0,575	1,093
Max. linear speed	v_{max}	mm/s	756	783	826	826
Max. acceleration	a_{max}	m/s^2	6	6	6	6
Duty cycle	D	%	100	100	100	100
Mechanical Data						
Screw type	–	–	Ball screw	Ball screw	Ball screw	Ball screw
Screw diameter	d_{screw}	mm	12,7	12,7	12,7	12,7
Screw lead	p_{screw}	mm	12,7	12,7	12,7	12,7
Lead accuracy	–	–	G7	G7	G7	G7
Stroke	s	mm	100…600	100…600	100…600	100…600
Internal overstroke each side	s_0	mm	1	1	1	1
Backlash	$s_{backlash}$	mm	0,07	0,07	0,07	0,07
Gear reduction	i	–	1	1	1	1
Efficiency	η	%	72	77	73	75
Inertia @ 0 mm stroke	J	10^{-4} kgm^2	0,2657	0,8347	0,4167	1,0827
Δ Inertia per 100 mm stroke	ΔJ	10^{-4} kgm^2	0,0144	0,0144	0,0144	0,0144
Inertia of optional brake	J_{brake}	10^{-4} kgm^2	0	0,0000	0,0700	0,1000
Weight @ 0 mm stroke	m	kg	3,36	4,54	3,49	5,24
Δ weight per 100 mm stroke	Δm	kg	0,46	0,46	0,46	0,46
Weight of optional brake	m_{brake}	kg	0,5	0,50	0,20	0,40
Electrical Data						
Motor type	–	–	Brushless DC	Brushless DC	Servo	Servo
Nominal voltage	U	V DC	40	40	N/A	N/A
Nominal current	I	A	7	12,7	1,4	1,3
Peak current	I_{peak}	A	20	50,0	1,8	1,9
Nominal power	P	kW	0,236	0,450	0,400	0,600
Environment and Standards						
Ambient temperature	$T_{ambient}$	°C	0…+50	0…+50	0…+50	0…+50
Degree of protection	IP	–	54S	54S	54S	54S
Standards	–	–	ISO 15552	ISO 15552	ISO 15552	ISO 15552

Ordering information

	BG65S	BG75	1FK7022	1FK7034
Linear unit	see **page 76**	see **page 76**	see **page 76**	see **page 76**
Motor	BG65SX50PI	BG75X75PI	1FK7022-5AK71-1UH3	1FK7034-2AK71-1UH0
Adapter	ZBE-375574	ZBE-375578	ZBE-375546	ZBE-375603

For more information regarding motors and motor adapters, please visit **page 67**

Dimensional drawing

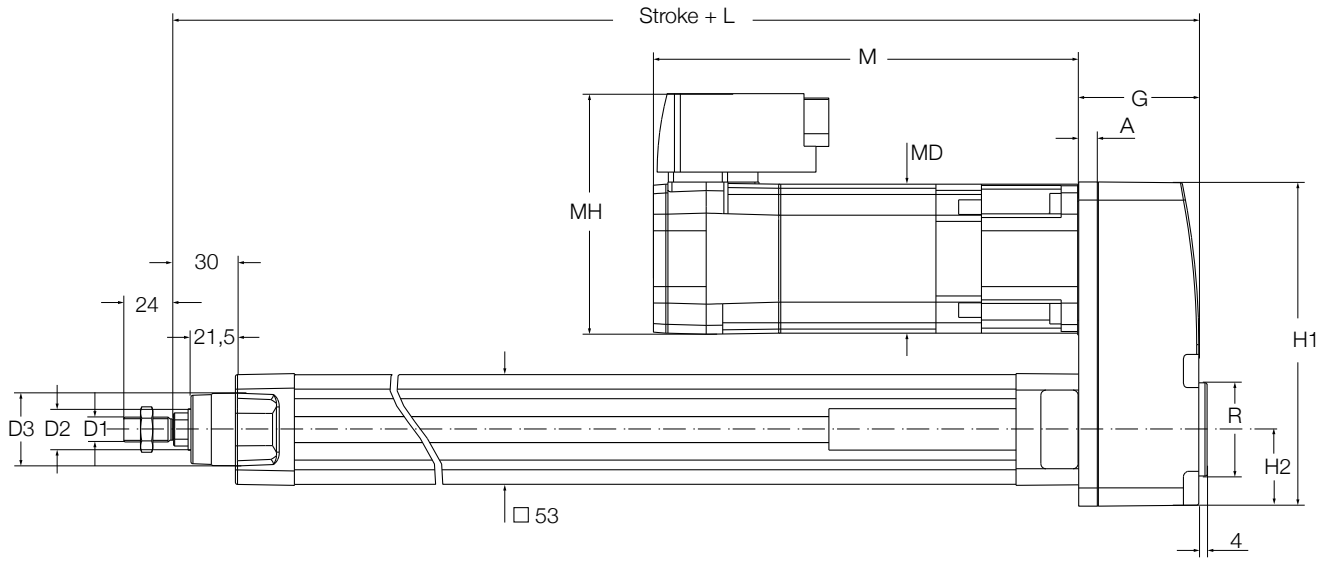

Motor	D1	D2	D3	L	G	A	H1	H2	M	MD	MH	R
		mm										
BG65S	M12 × 1,25	Ø20	Ø35	223	46.5	7	115,3	26,8	201	65	96,5	Ø35
BG75	M12 × 1,25	Ø20	Ø35	234,5	58	7	156,6	37,05	234	75	100	Ø45
1FK7022	M12 × 1,25	Ø20	Ø35	223,6	47.1	7	115,3	26,8	175	55	103	Ø35
1FK7034	M12 × 1,25	Ø20	Ø35	234,6	58.1	9	157,3	37,05	200	72	117	Ø45

Performance diagrams

Axial force [N]

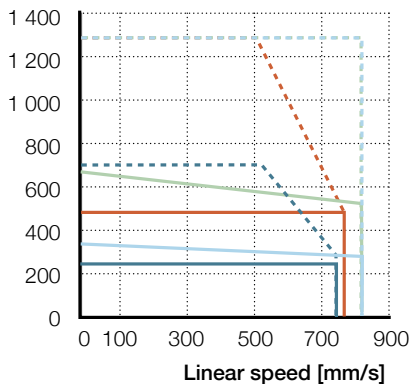

BG65S F_{cont} F_{peak} BG75 F_{cont} F_{peak} 1FK7022 F_{cont} F_{peak} 1FK7034 F_{cont} F_{peak}

Radial load [N]

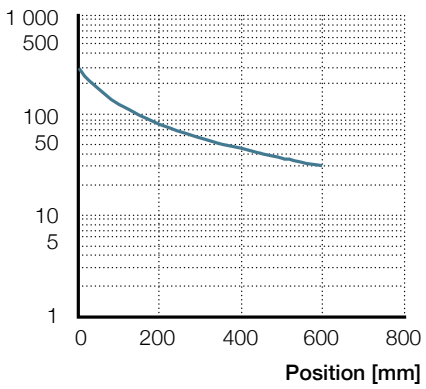

CASM–40–BN

F_m [N]

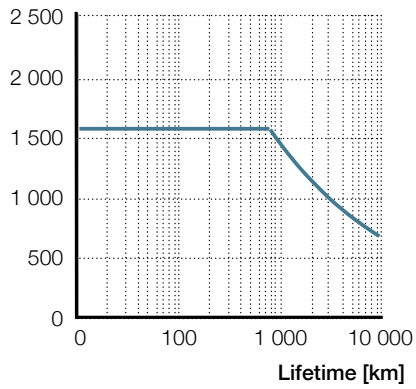

CASM–40–BN

Ordering key

See **page 122**

CASM-63-LS

Electric cylinder motor, inline configuration

Technical data

Designation	Symbol	Unit	BLDC motor BG75	Servo motor 1FK7034
Performance Data				
Continuous force @ zero speed	F_{c0}	kN	0,711	0,980
Continuous force @ max. speed	F_c	kN	0,114	0,114
Peak force @ zero speed	F_{p0}	kN	1,000	1,000
Peak force @ max. speed	F_p	kN	1,000	1,000
Dynamic load capacity	C	kN	N/A	N/A
Holding force (motorbrake option)	F_{Hold}	kN	–	–
Max. linear speed	v_{max}	mm/s	70	70
Max. acceleration	a_{max}	m/s^2	1	1
Duty cycle	D	%	60	60
Mechanical Data				
Screw type	–	–	Lead screw	Lead screw
Screw diameter	d_{screw}	mm	20	20
Screw lead	p_{screw}	mm	4	4
Lead accuracy	–	–	N/A	N/A
Stroke	s	mm	100…800	100…800
Internal overstroke each side	s_0	mm	1	1
Backlash	$s_{backlash}$	mm	N/A	N/A
Gear reduction	i	–	1	1
Efficiency	η	%	35	34
Inertia @ 0 mm stroke	J	10^{-4} kgm^2	1,6120	1,8600
Δ Inertia per 100 mm stroke	ΔJ	10^{-4} kgm^2	0,0809	0,0809
Inertia of optional brake	J_{brake}	10^{-4} kgm^2	0,0000	0,1000
Weight @ 0 mm stroke	m	kg	5,95	6,65
Δ weight per 100 mm stroke	Δm	kg	0,81	0,81
Weight of optional brake	m_{brake}	kg	0,50	0,40
Electrical Data				
Motor type	–	–	Brushless DC	Servo
Nominal voltage	U	V DC	40	N/A
Nominal current	I	A	12,7	1,3
Peak current	I_{peak}	A	50,0	1,9
Nominal power	P	kW	0,450	0,600
Environment and Standards				
Ambient temperature	$T_{ambient}$	°C	0…+50	0…+50
Degree of protection	IP	–	54S	54S
Standards	–	–	ISO 15552	ISO 15552

Ordering information

	BG75	1FK7034
Linear unit	see **page 78**	see **page 78**
Motor	BG75X75PI	1FK7034-2AK71-1UH0
Adapter	ZBE-375572	ZBE-375544

For more information regarding motors and motor adapters, please visit **page 67**

Dimensional drawing

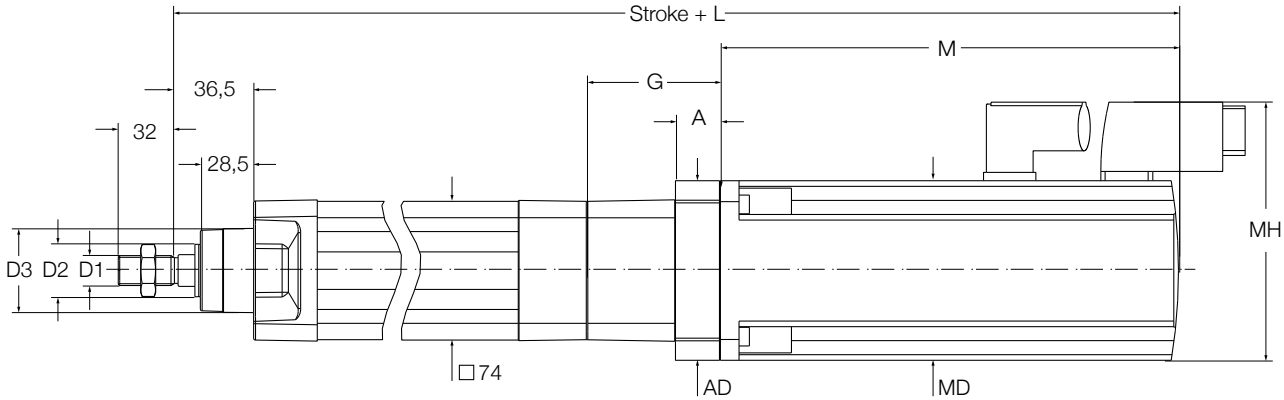

Motor	D1	D2	D3	L	G	A	AD	M	MD	MH
		mm								
BG75	M16 × 1,5	Ø28	Ø45	515,1	67,1	20	75	234	75	100
1FK7034	M16 × 1,5	Ø28	Ø45	476,4	62,4	15	75	200	72	117

Performance diagrams

Axial force [N]

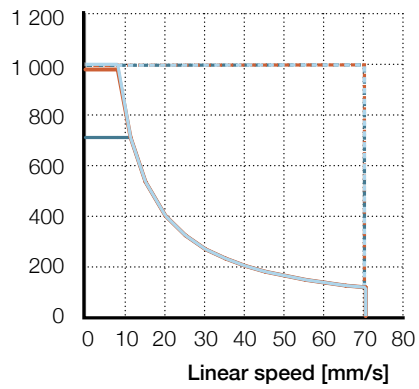

BG75 — F_{cont}, F_{peak}
1FK7034 — F_{cont}, F_{peak}
1FK7034 — F_{cont}, F_{peak}

Radial load [N]

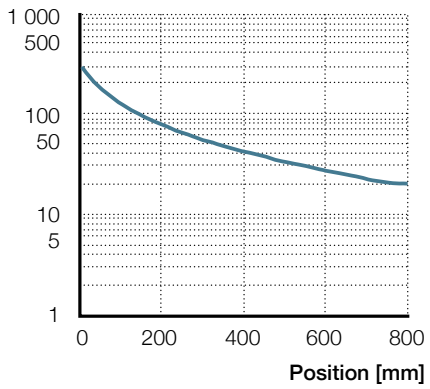

CASM–63–LS

F_m [N]

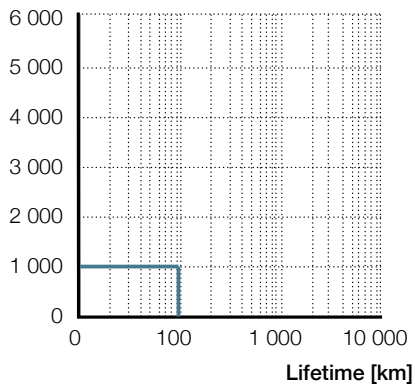

CASM–63–LS

Ordering key

See **page 122**

CASM-63-LS

Electric cylinder motor, parallel configuration

Technical data

Designation	Symbol	Unit	BLDC motor BG75	Servo motor 1FK7034
Performance Data				
Continuous force @ zero speed	F_{c0}	kN	0,704	0,970
Continuous force @ max. speed	F_c	kN	0,114	0,114
Peak force @ zero speed	F_{p0}	kN	1,000	1,000
Peak force @ max. speed	F_p	kN	1,000	1,000
Dynamic load capacity	C	kN	N/A	N/A
Holding force (motorbrake option)	F_{Hold}	kN		
Max. linear speed	v_{max}	mm/s	70	70
Max. acceleration	a_{max}	m/s^2	1	1
Duty cycle	D	%	60	60
Mechanical Data				
Screw type	–	–	Lead screw	Lead screw
Screw diameter	d_{screw}	mm	20	20
Screw lead	p_{screw}	mm	4	4
Lead accuracy	–	–	N/A	N/A
Stroke	s	mm	100…800	100…800
Internal overstroke each side	s_0	mm	1	1
Backlash	$s_{backlash}$	mm	N/A	N/A
Gear reduction	i	–	1	1
Efficiency	η	%	35	34
Inertia @ 0 mm stroke	J	10^{-4} kgm^2	1,4668	1,7148
Δ Inertia per 100 mm stroke	ΔJ	10^{-4} kgm^2	0,0809	0,0809
Inertia of optional brake	J_{brake}	10^{-4} kgm^2	0,0000	0,1000
Weight @ 0 mm stroke	m	kg	6,05	6,75
Δ weight per 100 mm stroke	Δm	kg	0,81	0,81
Weight of optional brake	m_{brake}	kg	0,50	0,40
Electrical Data				
Motor type	–	–	Brushless DC	Servo
Nominal voltage	U	V DC	40	N/A
Nominal current	I	A	12,7	1,3
Peak current	I_{peak}	A	50,0	1,9
Nominal power	P	kW	0,450	0,600
Environment and Standards				
Ambient temperature	$T_{ambient}$	°C	0…+50	0…+50
Degree of protection	IP	–	54S	54S
Standards	–	–	ISO 15552	ISO 15552

Ordering information

	BG75	1FK7034
Linear unit	see **page 78**	see **page 78**
Motor	BG75X75PI	1FK7034-2AK71-1UH0
Adapter	ZBE-375575	ZBE-375543

For more information regarding motors and motor adapters, please visit **page 67**

Dimensional drawing

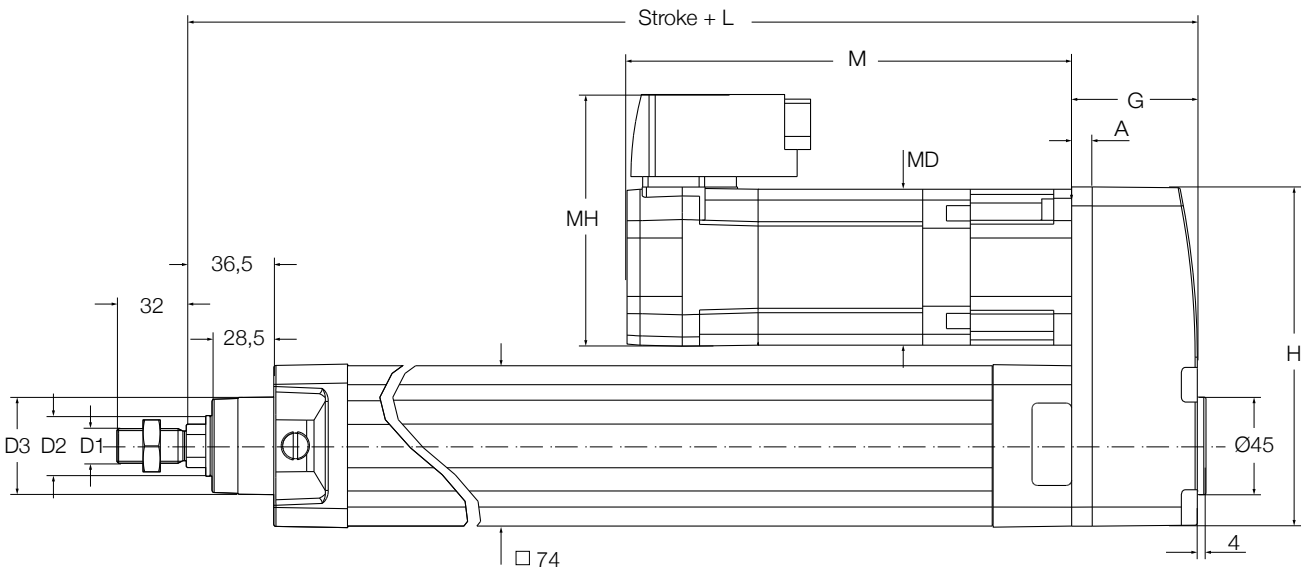

Motor	D1	D2	D3	L	G	A	H	M	MD	MH
		mm								
BG75	M16 × 1,5	Ø28	Ø45	281,1	39,5	9	157,3	234	75	100
1FK7034	M16 × 1,5	Ø28	Ø45	272,1	58,1	9	157,3	200	72	117

Performance diagrams

Axial force [N]

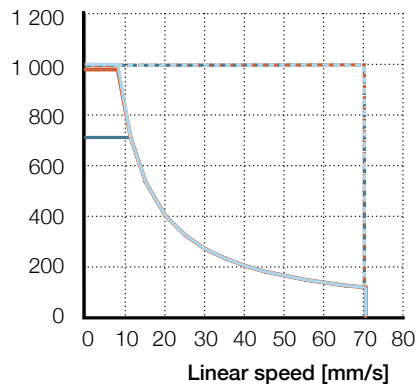

BG75 — F_{cont}, F_{peak}
1FK7034 — F_{cont}, F_{peak}
1FK7034 — F_{cont}, F_{peak}

Radial load [N]

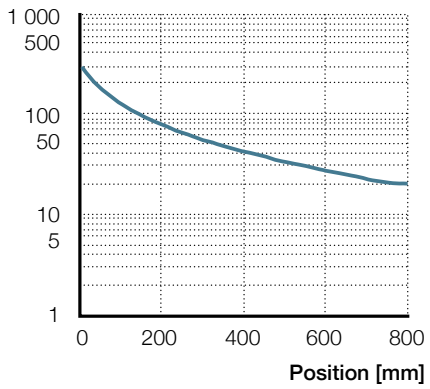

CASM–63–LS

F_m [N]

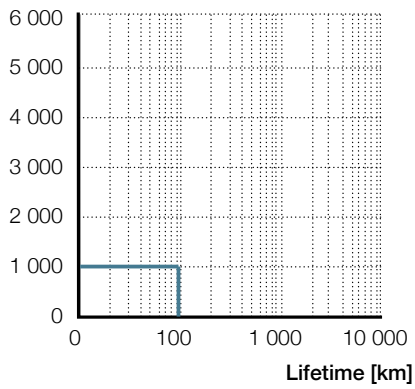

CASM–63–LS

Ordering key

See **page 122**

CASM-63-BS

Electric cylinder motor, inline configuration

Technical data

Designation	Symbol	Unit	BLDC motor BG75	Servo motor 1FK7034	Servo motor 1FK7044
Performance Data					
Continuous force @ zero speed	F_{c0}	kN	1,226	1,707	4,797
Continuous force @ max. speed	F_c	kN	1,226	1,479	3,65
Peak force @ zero speed	F_{p0}	kN	4,02	5,4	5,4
Peak force @ max. speed	F_p	kN	1,43	5,4	5,4
Dynamic load capacity	C	kN	13,7	13,7	13,7
Holding force (motorbrake option)	F_{Hold}	kN	1,26	2,4	5,15
Max. linear speed	v_{max}	mm/s	300	300	300
Max. acceleration	a_{max}	m/s^2	5	5	5
Duty cycle	D	%	100	100	100
Mechanical Data					
Screw type	–	–	Ball screw	Ball screw	Ball screw
Screw diameter	d_{screw}	mm	20	20	20
Screw lead	p_{screw}	mm	5	5	5
Lead accuracy	–	–	G7	G7	G7
Stroke	s	mm	100…800	100…800	100…800
Internal overstroke each side	s_0	mm	1	1	1
Backlash	$s_{backlash}$	mm	0,07	0,07	0,07
Gear reduction	i	–	1	1	1
Efficiency	η	%	77	75	77
Inertia @ 0 mm stroke	J	10^{-4} kgm^2	1,612	1,86	2,22
Δ Inertia per 100 mm stroke	ΔJ	10^{-4} kgm^2	0,0809	0,0809	0,0809
Inertia of optional brake	J_{brake}	10^{-4} kgm^2	0	0,1	0,36
Weight @ 0 mm stroke	m	kg	6,05	6,75	10,65
Δ weight per 100 mm stroke	Δm	kg	0,81	0,81	0,81
Weight of optional brake	m_{brake}	kg	0,5	0,4	0,6
Electrical Data					
Motor type	–	–	Brushless DC	Servo	Servo
Nominal voltage	U	V DC	40	N/A	N/A
Nominal current	I	A	12,7	1,3	3,9
Peak current	I_{peak}	A	50	1,9	5,4
Nominal power	P	kW	0,45	0,6	1,4
Environment and Standards					
Ambient temperature	$T_{ambient}$	°C	0…+50	0…+50	0…+50
Degree of protection	IP	–	54S	54S	54S
Standards	–	–	ISO15552	ISO15552	ISO15552

Ordering information

	BG75	1FK7034	1FK7044
Linear unit	see **page 78**	see **page 78**	see **page 78**
Motor	BG75X75PI	1FK7034-2AK71-1UH0	1FK7044-4CH71-1UH0
Adapter	ZBE-375572	ZBE-375544	ZBE-375535

For more information regarding motors and motor adapters, please visit **page 67.**

Dimensional drawing

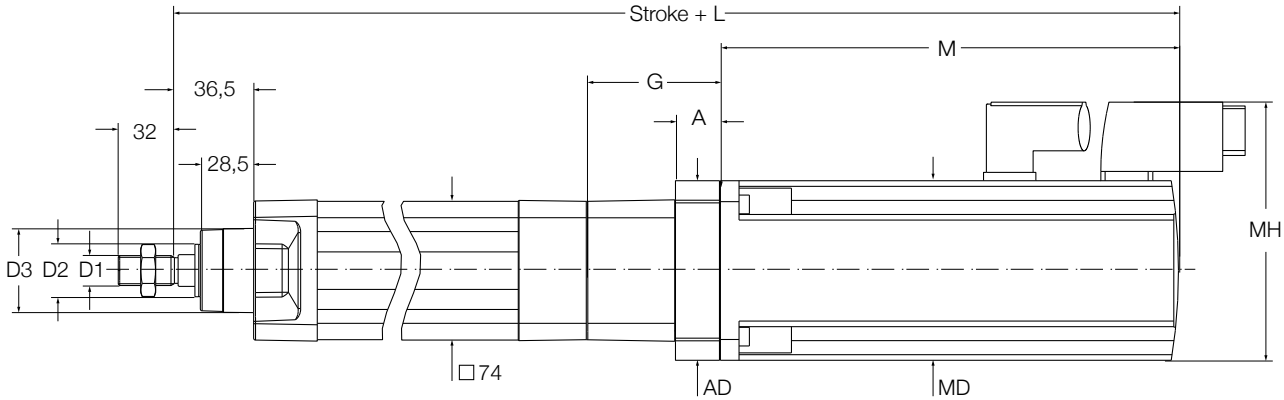

Motor	D1	D2	D3	L	G	A	AD	M	MD	MH
		mm								
BG75	M16 × 1,5	Ø28	Ø45	515,1	67,1	20	75	234	75	100
1FK7034	M16 × 1,5	Ø28	Ø45	476,4	62,4	15	75	200	72	117
1FK7044	M16 × 1,5	Ø28	Ø45	529,9	70,9	23,5	96	245	96	138

Performance diagrams

Axial force [N]

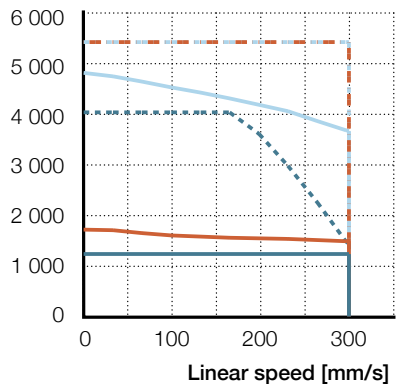

BG75 — F_{cont}, F_{peak}
1FK7034 — F_{cont}, F_{peak}
1FK7044 — F_{cont}, F_{peak}

Radial load [N]

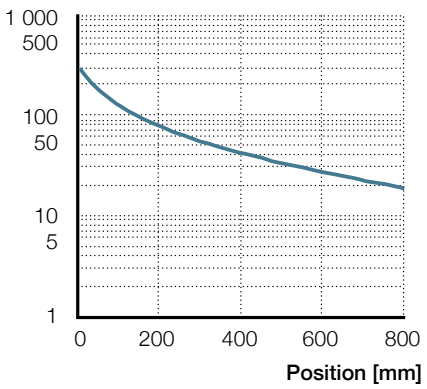

CASM–63–BS

F_m [N]

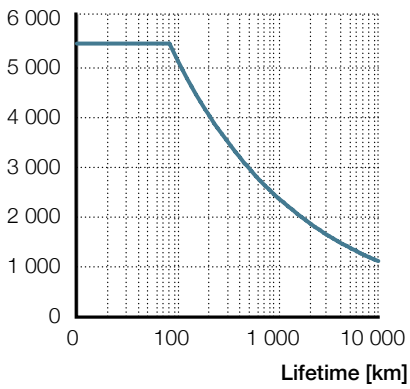

CASM–63–BS

Ordering key

See **page 122**

CASM-63-BS

Electric cylinder motor, parallel configuration

Technical data

Designation	Symbol	Unit	BLDC motor BG75	Servo motor 1FK7034
Performance Data				
Continuous force @ zero speed	F_{c0}	kN	1,226	1,707
Continuous force @ max. speed	F_c	kN	1,226	1,479
Peak force @ zero speed	F_{p0}	kN	4,02	5,4
Peak force @ max. speed	F_p	kN	1,43	5,4
Dynamic load capacity	C	kN	13,7	13,7
Holding force (motorbrake option)	F_{Hold}	kN	1,26	2,4
Max. linear speed	v_{max}	mm/s	300	300
Max. acceleration	a_{max}	m/s^2	5	5
Duty cycle	D	%	100	100
Mechanical Data				
Screw type	–	–	Ball screw	Ball screw
Screw diameter	d_{screw}	mm	20	20
Screw lead	p_{screw}	mm	5	5
Lead accuracy	–	–	G7	G7
Stroke	s	mm	100…800	100…800
Internal overstroke each side	s_0	mm	1	1
Backlash	$s_{backlash}$	mm	0,07	0,07
Gear reduction	i	–	1	1
Efficiency	η	%	76	74
Inertia @ 0 mm stroke	J	10^{-4} kgm^2	1,4668	1,7148
Δ Inertia per 100 mm stroke	ΔJ	10^{-4} kgm^2	0,0809	0,0809
Inertia of optional brake	J_{brake}	10^{-4} kgm^2	0	0,1
Weight @ 0 mm stroke	m	kg	6,15	6,85
Δ weight per 100 mm stroke	Δm	kg	0,81	0,81
Weight of optional brake	m_{brake}	kg	0,5	0,4
Electrical Data				
Motor type	–	–	Brushless DC	Servo
Nominal voltage	U	V DC	40	N/A
Nominal current	I	A	12,7	1,3
Peak current	I_{peak}	A	50	1,9
Nominal power	P	kW	0,45	0,6
Environment and Standards				
Ambient temperature	$T_{ambient}$	°C	0…+50	0…+50
Degree of protection	IP	–	54S	54S
Standards	–	–	ISO 15552	ISO 15552

Ordering information

	BG75	1FK7034
Linear unit	see **page 78**	see **page 78**
Motor	BG75X75PI	1FK7034-2AK71-1UH0
Adapter	ZBE-375575	ZBE-375543

For more information regarding motors and motor adapters, please visit **page 67.**

Dimensional drawing

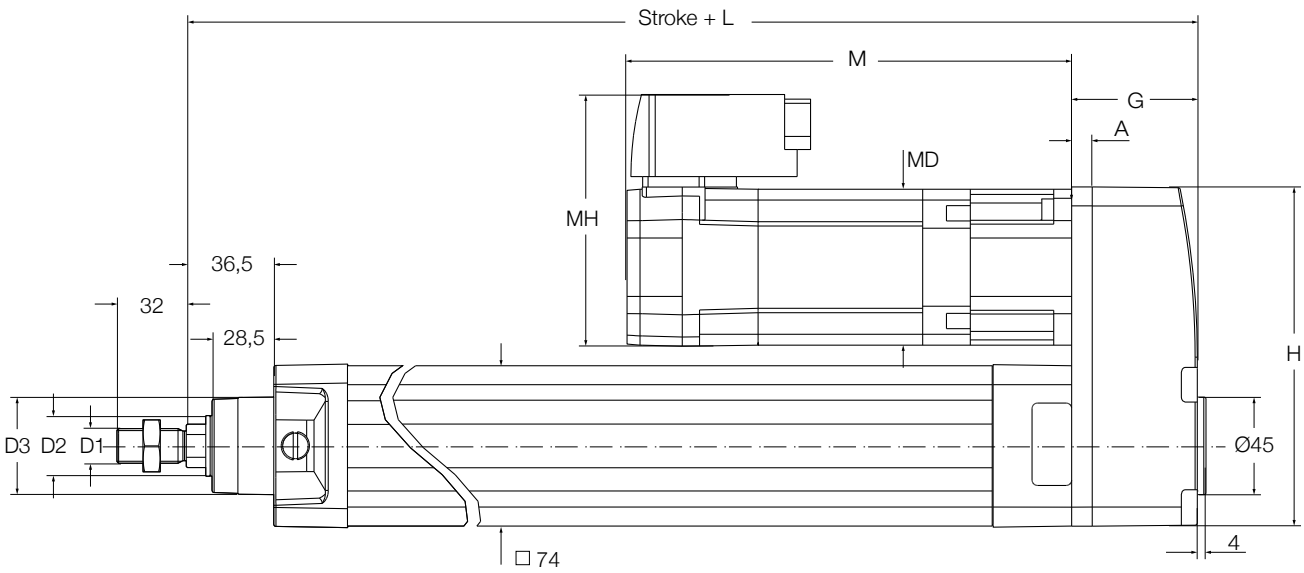

Motor	D1	D2	D3	L	G	A	H	M	MD	MH
		mm								
BG75	M16 × 1,5	Ø28	Ø45	281,1	39,5	9	157,3	234	75	100
1FK7034	M16 × 1,5	Ø28	Ø45	272,1	58,1	9	157,3	200	72	117

Performance diagrams

Axial force [N]

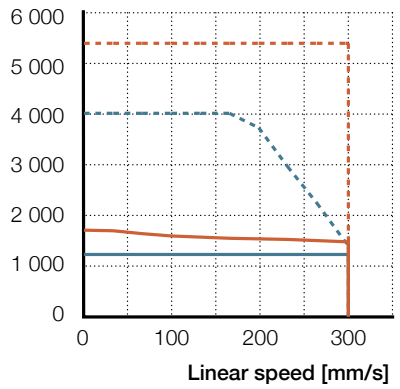

BG75 — F_{cont} — F_{peak}
1FK7034 — F_{cont} — F_{peak}

Radial load [N]

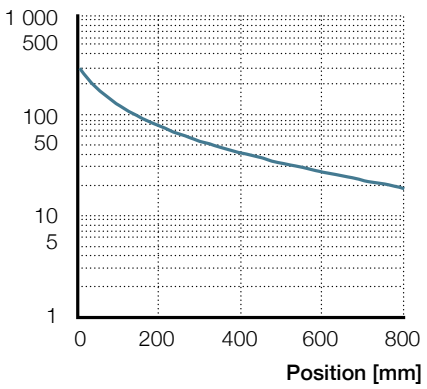

CASM–63–BS

F_m [N]

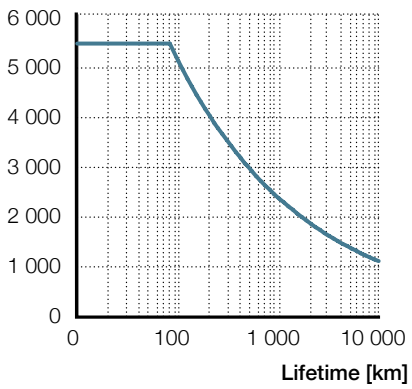

CASM–63–BS

Ordering key

See **page 122**

CASM-63-BN

Electric cylinder motor, inline configuration

Technical data

Designation	Symbol	Unit	BLDC motor BG75	Servo motor 1FK7034	Servo motor 1FK7044
Performance Data					
Continuous force @ zero speed	F_{c0}	kN	0,620	0,855	2,403
Continuous force @ max. speed	F_c	kN	0,620	0,769	1,933
Peak force @ zero speed	F_{p0}	kN	2,190	3,471	5,400
Peak force @ max. speed	F_p	kN	1,081	3,471	5,400
Dynamic load capacity	C	kN	21	21	21
Holding force (motorbrake option)	F_{Hold}	kN	0,739	1,404	2,956
Max. linear speed	v_{max}	mm/s	533	533	533
Max. acceleration	a_{max}	m/s^2	6	6	6
Duty cycle	D	%	100	100	100
Mechanical Data					
Screw type	–	–	Ball screw	Ball screw	Ball screw
Screw diameter	d_{screw}	mm	20	20	20
Screw lead	p_{screw}	mm	10	10	10
Lead accuracy	–	–	G7	G7	G7
Stroke	s	mm	100…800	100…800	100…800
Internal overstroke each side	s_0	mm	1	1	1
Backlash	$s_{backlash}$	mm	0,07	0,07	0,07
Gear reduction	i	–	1	1	1
Efficiency	η	%	77	75	77
Inertia @ 0 mm stroke	J	10^{-4} kgm^2	1,6120	1,8600	2,2200
Δ Inertia per 100 mm stroke	ΔJ	10^{-4} kgm^2	0,0809	0,0809	0,0809
Inertia of optional brake	J_{brake}	10^{-4} kgm^2	0,0000	0,1000	0,3600
Weight @ 0 mm stroke	m	kg	6,05	6,75	10,65
Δ weight per 100 mm stroke	Δm	kg	0,81	0,81	0,81
Weight of optional brake	m_{brake}	kg	0,50	0,40	0,60
Electrical Data					
Motor type	–	–	Brushless DC	Servo	Servo
Nominal voltage	U	V DC	40	N/A	N/A
Nominal current	I	A	12,7	1,3	3,9
Peak current	I_{peak}	A	50,0	1,9	5,4
Nominal power	P	kW	0,450	0,600	1,400
Environment and Standards					
Ambient temperature	$T_{ambient}$	°C	0…+50	0…+50	0…+50
Degree of protection	IP	–	54S	54S	54S
Standards	–	–	ISO 15552	ISO 15552	ISO 15552

Ordering information

	BG75	1FK7034	1FK7044
Linear unit	see **page 78**	see **page 78**	see **page 78**
Motor	BG75X75PI	1FK7034-2AK71-1UH0	1FK7044-4CH71-1UH0
Adapter	ZBE-375572	ZBE-375544	ZBE-375535

For more information regarding motors and motor adapters, please visit **page 67**

Dimensional drawing

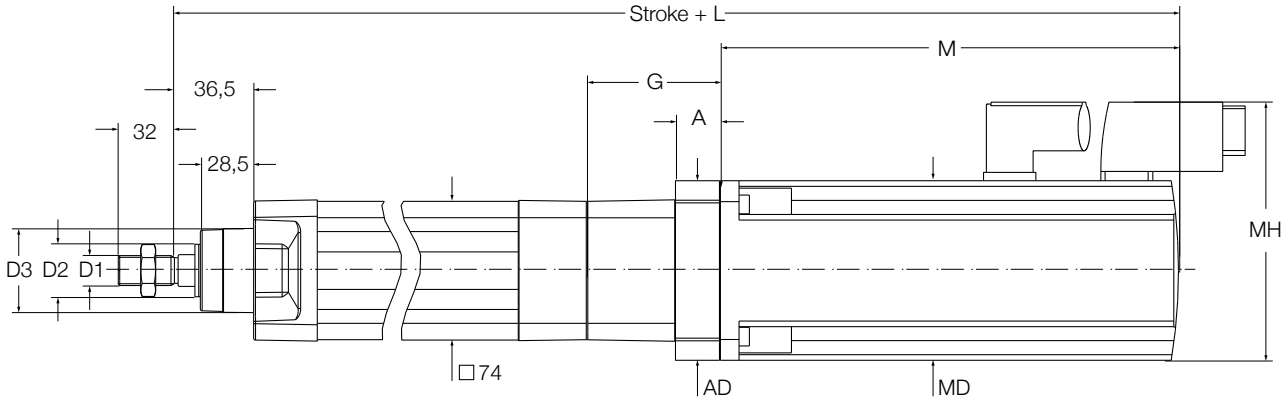

Motor	D1	D2	D3	L	G	A	AD	M	MD	MH
		mm								
BG75	M16 × 1,5	Ø28	Ø45	515,1	67,1	20	75	234	75	100
1FK7034	M16 × 1,5	Ø28	Ø45	476,4	62,4	15	75	200	72	117
1FK7044	M16 × 1,5	Ø28	Ø45	529,9	70,9	23,5	96	245	96	138

Performance diagrams

Axial force [N]

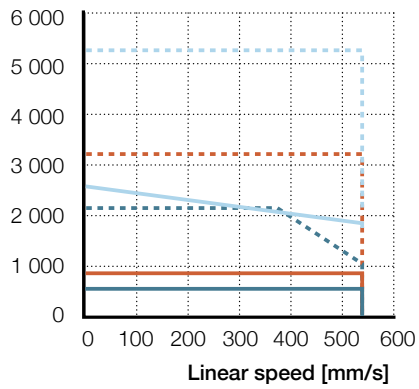

BG75 — F_{cont}, F_{peak}
1FK7034 — F_{cont}, F_{peak}
1FK7044 — F_{cont}, F_{peak}

Radial load [N]

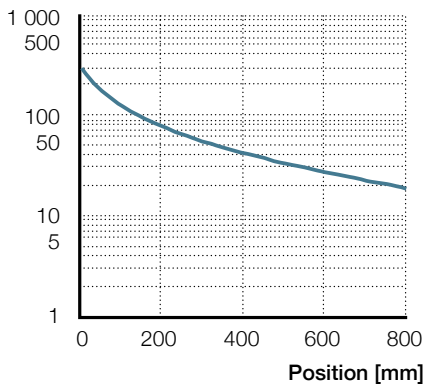

CASM–63–BN

F_m [N]

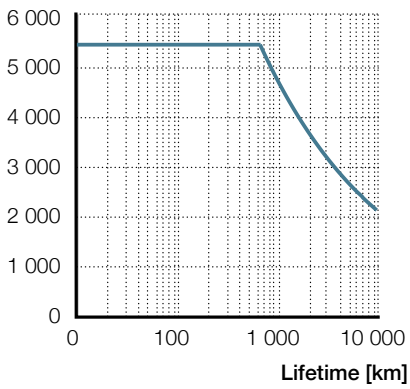

CASM–63–BN

Ordering key

See **page 122**

CASM-63-BN

Electric cylinder motor, parallel configuration

Technical data

Designation	Symbol	Unit	BLDC motor BG75	Servo motor 1FK7034
Performance Data				
Continuous force @ zero speed	F_{c0}	kN	0,613	0,846
Continuous force @ max. speed	F_c	kN	0,613	0,761
Peak force @ zero speed	F_{p0}	kN	2,168	2,937
Peak force @ max. speed	F_p	kN	1,070	2,937
Dynamic load capacity	C	kN	21	21
Holding force (motorbrake option)	F_{Hold}	kN	0,739	1,404
Max. linear speed	v_{max}	mm/s	533	533
Max. acceleration	a_{max}	m/s^2	6	6
Duty cycle	D	%	100	100
Mechanical Data				
Screw type	–	–	Ball screw	Ball screw
Screw diameter	d_{screw}	mm	20	20
Screw lead	p_{screw}	mm	10	10
Lead accuracy	–	–	G7	G7
Stroke	s	mm	100…800	100…800
Internal overstroke each side	s_0	mm	1	1
Backlash	$s_{backlash}$	mm	0,07	0,07
Gear reduction	i	–	1	1
Efficiency	η	%	76	74
Inertia @ 0 mm stroke	J	10^{-4} kgm^2	1,4668	1,7148
Δ Inertia per 100 mm stroke	ΔJ	10^{-4} kgm^2	0,0809	0,0809
Inertia of optional brake	J_{brake}	10^{-4} kgm^2	0,0000	0,1000
Weight @ 0 mm stroke	m	kg	6,15	6,85
Δ weight per 100 mm stroke	Δm	kg	0,81	0,81
Weight of optional brake	m_{brake}	kg	0,50	0,40
Electrical Data				
Motor type	–	–	Brushless DC	Servo
Nominal voltage	U	V DC	40	N/A
Nominal current	I	A	12,7	1,3
Peak current	I_{peak}	A	50	1,9
Nominal power	P	kW	0,450	0,600
Environment and Standards				
Ambient temperature	$T_{ambient}$	°C	0…+50	0…+50
Degree of protection	IP	–	54S	54S
Standards	–	–	ISO 15552	ISO 15552

Ordering information

	BG75	1FK7034
Linear unit	see **page 78**	see **page 78**
Motor	BG75X75PI	1FK7034-2AK71-1UH0
Adapter	ZBE-375575	ZBE-375543

For more information regarding motors and motor adapters, please visit **page 67**

Dimensional drawing

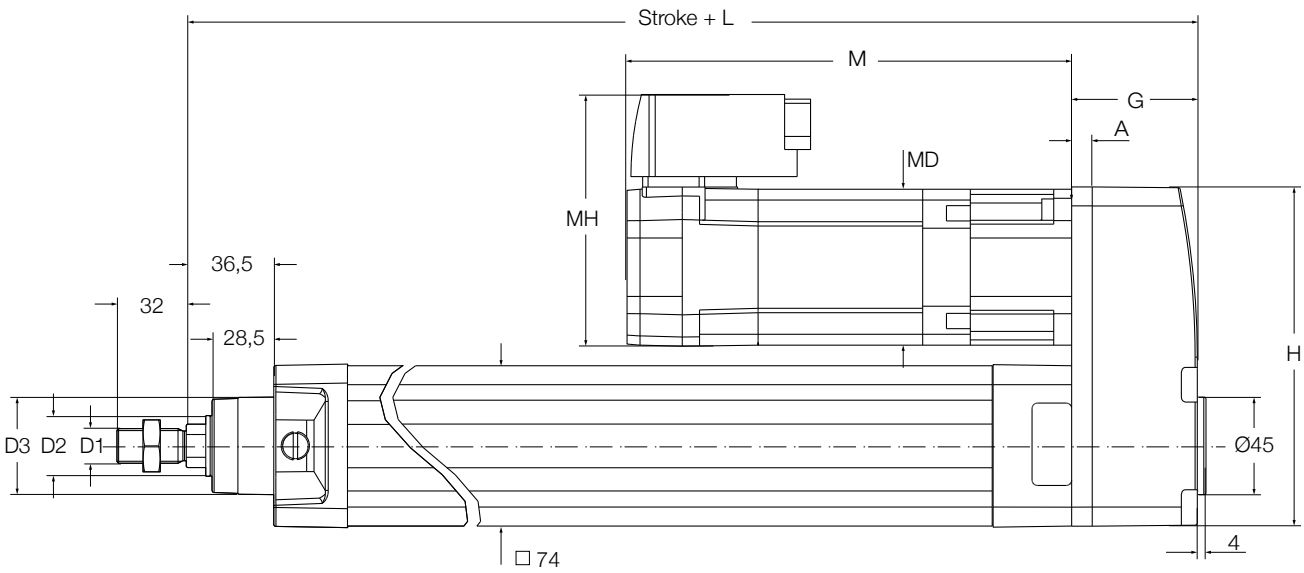

Motor	D1	D2	D3	L	G	A	H	M	MD	MH
		mm								
BG75	M16 × 1,5	Ø28	Ø45	281,1	39,5	9	157,3	234	75	100
1FK7034	M16 × 1,5	Ø28	Ø45	272,1	58,1	9	157,3	200	72	117

Performance diagrams

Axial force [N]

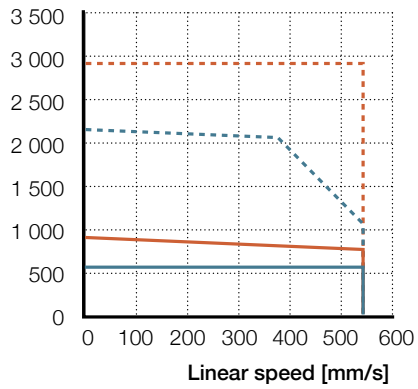

BG75 — F_{cont} — F_{peak}
1FK7034 — F_{cont} — F_{peak}

Radial load [N]

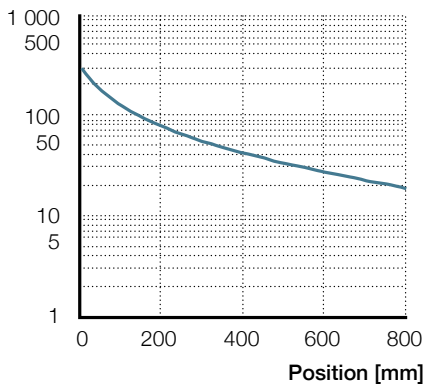

CASM–63–BN

F_m [N]

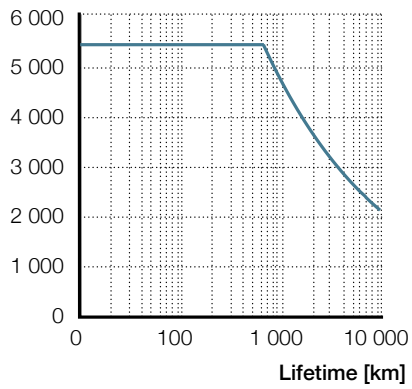

CASM–63–BN

Ordering key

See **page 122**

CASM-63-BF

Electric cylinder motor, inline configuration

Technical data

Designation	Symbol	Unit	BLDC motor BG75	Servo motor 1FK7034	Servo motor 1FK7044
Performance Data					
Continuous force @ zero speed	F_{c0}	kN	0,313	0,432	1,216
Continuous force @ max. speed	F_c	kN	0,313	0,389	0,978
Peak force @ zero speed	F_{p0}	kN	1,108	1,756	2,800
Peak force @ max. speed	F_p	kN	0,547	1,756	2,800
Dynamic load capacity	C	kN	10	10	10
Holding force (motorbrake option)	F_{Hold}	kN	0,365	0,694	1,461
Max. linear speed	v_{max}	mm/s	1 067	1 067	1 067
Max. acceleration	a_{max}	m/s^2	6	6	6
Duty cycle	D	%	100	100	100
Mechanical Data					
Screw type	–	–	Ball screw	Ball screw	Ball screw
Screw diameter	d_{screw}	mm	20	20	20
Screw lead	p_{screw}	mm	20	20	20
Lead accuracy	–	–	G7	G7	G7
Stroke	s	mm	100…800	100…800	100…800
Internal overstroke each side	s_0	mm	1	1	1
Backlash	$s_{backlash}$	mm	0,07	0,07	0,07
Gear reduction	i	–	1	1	1
Efficiency	η	%	77	76	78
Inertia @ 0 mm stroke	J	10^{-4} kgm^2	1,6156	1,8636	2,2236
Δ Inertia per 100 mm stroke	ΔJ	10^{-4} kgm^2	0,0855	0,0855	0,0855
Inertia of optional brake	J_{brake}	10^{-4} kgm^2	0	0,1000	0,3600
Weight @ 0 mm stroke	m	kg	6,05	6,75	10,65
Δ weight per 100 mm stroke	Δm	kg	0,81	0,81	0,81
Weight of optional brake	m_{brake}	kg	0,50	0,40	0,60
Electrical Data					
Motor type	–	–	Brushless DC	Servo	Servo
Nominal voltage	U	V DC	40	N/A	N/A
Nominal current	I	A	12,7	1,3	3,9
Peak current	I_{peak}	A	50,0	1,9	5,4
Nominal power	P	kW	0,450	0,600	1,400
Environment and Standards					
Ambient temperature	$T_{ambient}$	°C	0…+50	0…+50	0…+50
Degree of protection	IP	–	54S	54S	54S
Standards	–	–	ISO 15552	ISO 15552	ISO 15552

Ordering information

	BG75	1FK7034	1FK7044
Linear unit	see **page 78**	see **page 78**	see **page 78**
Motor	BG75X75PI	1FK7034-2AK71-1UH0	1FK7044-4CH71-1UH0
Adapter	ZBE-375572	ZBE-375544	ZBE-375535

For more information regarding motors and motor adapters, please visit **page 67**

Dimensional drawing

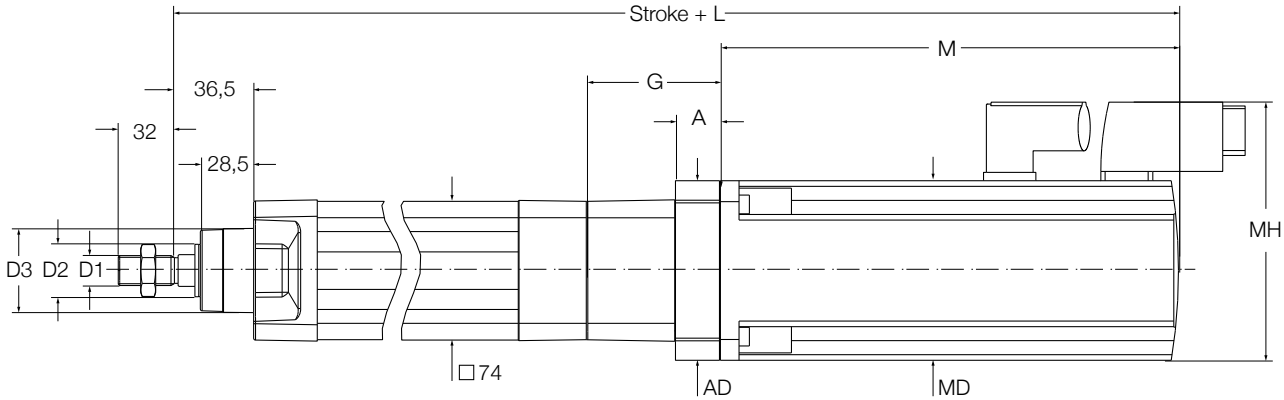

Motor	D1	D2	D3	L	G	A	AD	M	MD	MH
		mm								
BG75	M16 × 1,5	Ø28	Ø45	515,1	67,1	20	75	234	75	100
1FK7034	M16 × 1,5	Ø28	Ø45	476,4	62,4	15	75	200	72	117
1FK7044	M16 × 1,5	Ø28	Ø45	529,9	70,9	23,5	96	245	96	138

Performance diagrams

Axial force [N]

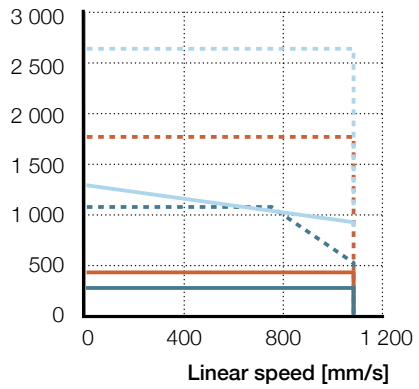

BG75 — F_{cont}, F_{peak}
1FK7034 — F_{cont}, F_{peak}
1FK7044 — F_{cont}, F_{peak}

Radial load [N]

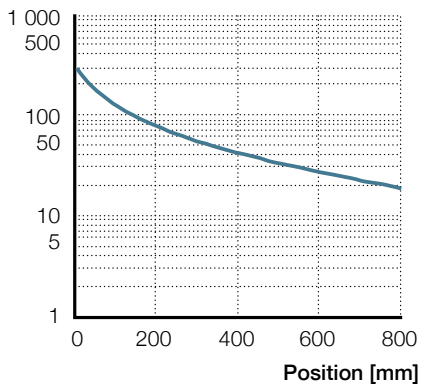

CASM–63–BF

F_m [N]

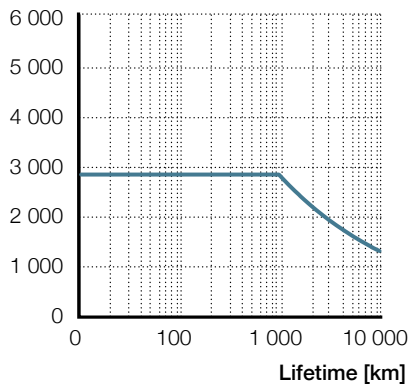

CASM–63–BF

Ordering key

See **page 122**

CASM-63-BF

Electric cylinder motor, parallel configuration

Technical data

Designation	Symbol	Unit	BLDC motor BG75	Servo motor 1FK7034
Performance Data				
Continuous force @ zero speed	F_{c0}	kN	0,310	0,428
Continuous force @ max. speed	F_c	kN	0,310	0,385
Peak force @ zero speed	F_{p0}	kN	1,097	1,486
Peak force @ max. speed	F_p	kN	0,541	1,486
Dynamic load capacity	C	kN	10	10
Holding force (motorbrake option)	F_{Hold}	kN	0,365	0,694
Max. linear speed	v_{max}	mm/s	1 067	1 067
Max. acceleration	a_{max}	m/s^2	6	6
Duty cycle	D	%	100	100
Mechanical Data				
Screw type	–	–	Ball screw	Ball screw
Screw diameter	d_{screw}	mm	20	20
Screw lead	p_{screw}	mm	20	20
Lead accuracy	–	–	G7	G7
Stroke	s	mm	100…800	100…800
Internal overstroke each side	s_0	mm	1	1
Backlash	$s_{backlash}$	mm	0,07	0,07
Gear reduction	i	–	1	1
Efficiency	η	%	77	75
Inertia @ 0 mm stroke	J	10^{-4} kgm^2	1,4704	1,7184
Δ Inertia per 100 mm stroke	ΔJ	10^{-4} kgm^2	0,0855	0,0855
Inertia of optional brake	J_{brake}	10^{-4} kgm^2	0,0000	0,1000
Weight @ 0 mm stroke	m	kg	6,15	6,85
Δ weight per 100 mm stroke	Δm	kg	0,81	0,81
Weight of optional brake	m_{brake}	kg	0,50	0,40
Electrical Data				
Motor type	–	–	Brushless DC	Servo
Nominal voltage	U	V DC	40	N/A
Nominal current	I	A	12,7	1,3
Peak current	I_{peak}	A	50,0	1,9
Nominal power	P	kW	0,450	0,600
Environment and Standards				
Ambient temperature	$T_{ambient}$	°C	0…+50	0…+50
Degree of protection	IP	–	54S	54S
Standards	–	–	ISO 15552	ISO 15552

Ordering information

	BG75	1FK7034
Linear unit	see **page 78**	see **page 78**
Motor	BG75X75PI	1FK7034-2AK71-1UH0
Adapter	ZBE-375575	ZBE-375543

For more information regarding motors and motor adapters, please visit **page 67**

Dimensional drawing

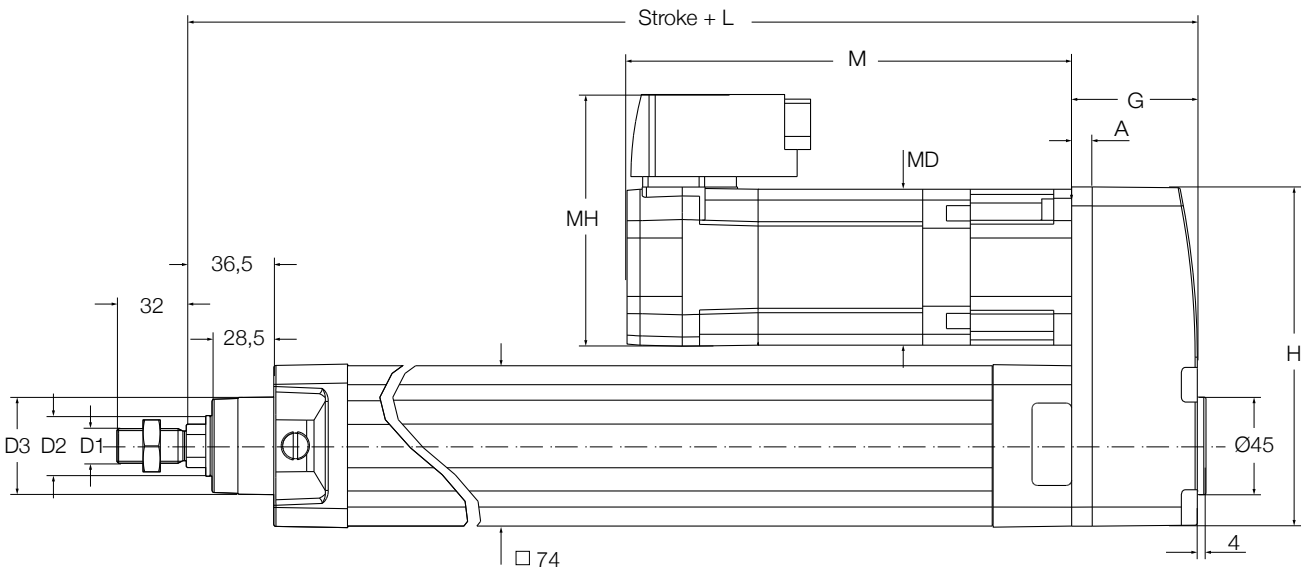

Motor	D1	D2	D3	L	G	A	H	M	MD	MH
		mm								
BG75	M16 × 1,5	Ø28	Ø45	281,1	39,5	9	157,3	234	75	100
1FK7034	M16 × 1,5	Ø28	Ø45	272,1	58,1	9	157,3	200	72	117

Performance diagrams

Axial force [N]

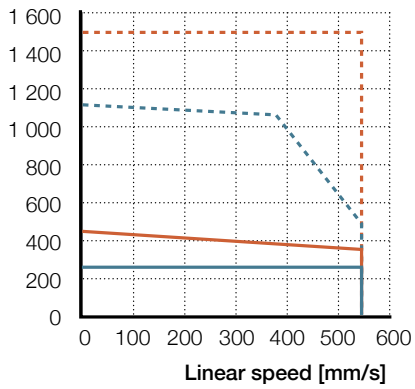

BG75 — F_{cont}, F_{peak}
1FK7034 — F_{cont}, F_{peak}

Radial load [N]

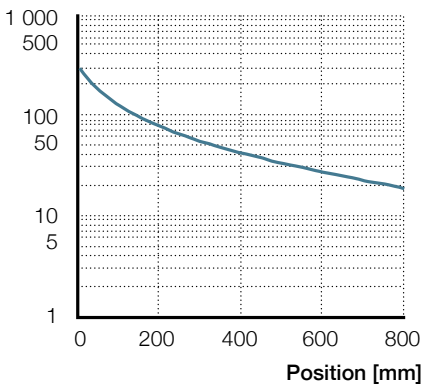

CASM–63–BF

F_m [N]

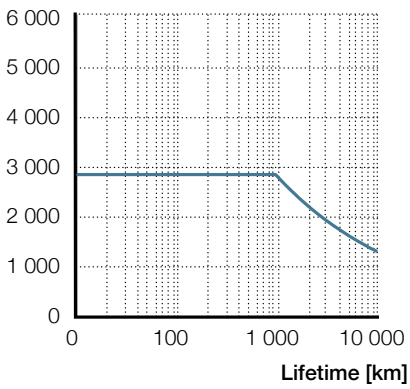

CASM–63–BF

Ordering key

See **page 122**

Ordering key

Linear units

C A S M - 3 2 - B S - 0 3 0 0 A M - 0 0 0

Screw
LS Lead screw 9 × 1,5 mm
BS Ball screw 10 × 3 mm
BN Ball screw 10 × 10 mm

Stroke
50 mm
100 mm
150 mm
200 mm
300 mm
400 mm

Option[1]
A Motor, adapter and accessories separately delivered
M Motor, adapter and foot mountings[2] pre-mounted

Customer option
000 No option

C A S M - 4 0 - L S - 0 1 0 0 A A - 0 0 0

Screw
LS Lead screw 12,5 × 2,5 mm
BS Ball screw 12 × 5 mm
BN Ball screw 12,7 × 12,7 mm

Stroke
100 mm
200 mm
300 mm
400 mm
500 mm
600 mm

Option[1]
A Motor, adapter and accessories separately delivered
M Motor, adapter and foot mountings[2] pre-mounted

Customer option
000 No option

C A S M - 6 3 - B F - 0 7 0 0 A A - 0 0 0

Screw
LS Lead screw 20 × 4 mm
BS Ball screw 20 × 5 mm
BN Ball screw 20 × 10 mm
BF Ball screw 20 × 20 mm

Stroke
100 mm
200 mm
300 mm
400 mm
500 mm
600 mm
700 mm
800 mm

Option[1]
A Motor, adapter and accessories separately delivered
M Motor, adapter and foot mountings[2] pre-mounted

Customer option
000 No option

[1] Motor, adapter kit and accessories need to be ordered separately
[2] Foot mountings pre-mounted on inline version only

Servo motors

Motor
1FK7015-5AK71-1SH3
1FK7022-5AK71-1UH3
1FK7034-2AK71-1UH0
1FK7044-4CH71-1UH0

Brushless DC motors

Motor
BG45x30PI
BG65Sx50PI
BG75x75PI

Brushless DC motors options

Motor options		
Brushless DC motor programming kit	–	ZBE-530615
Brushless DC motor cable 3 m	BG45x30PI	ZBE-530632-03
Brushless DC motor cable 10 m	BG45x30PI	ZBE-530632-10
Brushless DC motor cable 3 m	BG65Sx50PI	ZBE-530634-03
Brushless DC motor cable 10 m	BG65Sx50PI	ZBE-530643-10
Brushless DC motor cable 3 m	BG75x75PI	ZBE-530630-03
Brushless DC motor cable 10 m	BG75x75PI	ZBE-530630-10

Adapters for Servo motors

Motor	CASM-32		CASM-40		CASM-63	
	Inline adapter	Parallel adapter	Inline adapter	Parallel adapter	Inline adapter	Parallel adapter
1FK7015-5AK-71-1SH3	ZBE-375530	ZBE-375540	–	–	–	–
1FK7022-5AK71-1UH3	ZBE-375537	–	ZBE-375538	ZBE-375546	–	–
1FK7034-2AK71-1UH0	–	–	ZBE-375545	ZBE-375603	ZBE-375544	ZBE-375543
1FK7044-4CH71-1UH0	–	–	–	–	ZBE-375535	–

Adapters for brushless DC motors

Motor	CASM-32		CASM-40		CASM-63	
	Inline adapter	Parallel adapter	Inline adapter	Parallel adapter	Inline adapter	Parallel adapter
BG45x30PI	ZBE-375570	ZBE-375573	–	–	–	–
BG65Sx50PI	–	–	ZBE-375571	ZBE-375574	–	–
BG75x75PI	–	–	ZBE-375579	ZBE-375578	ZBE-375572	ZBE-375575

Example

To order a CASM-32 with BG45 motor and parallel adapter the ordering key is the following:
CASM-32-BN-0150AM-000
BG45x30PI
ZBE-375573

Accessories

CASM-32

Foot mounting kit*

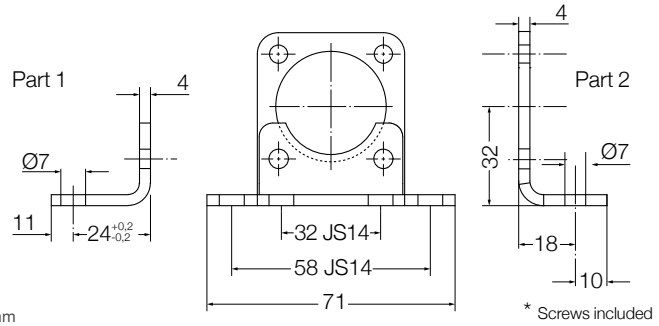

Ordering key
ZBE–375501–32
For parallel version (2x part 1)

Ordering key
ZBE–375507–32
For inline version (part 1 + part 2)

Note: The foot mounting between the linear unit and the adapter kit increases the length of the inline version by 4 mm

Flange mounting kit*

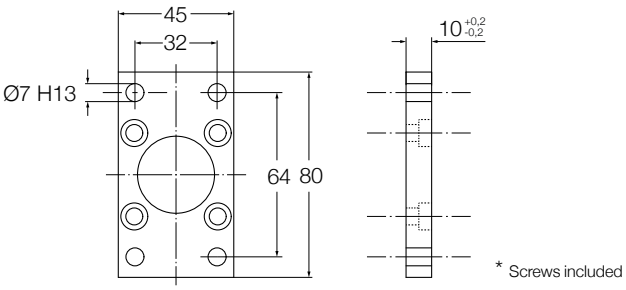

Ordering key
ZBE–375502–32

Trunnion flange kit*

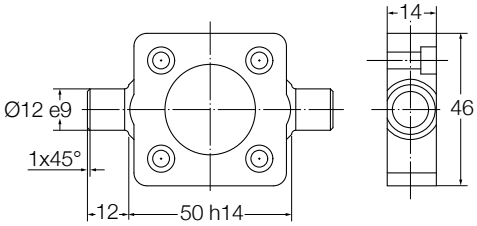

* Screws included

Ordering key
ZBE–375503–32

Trunnion mounting kit*

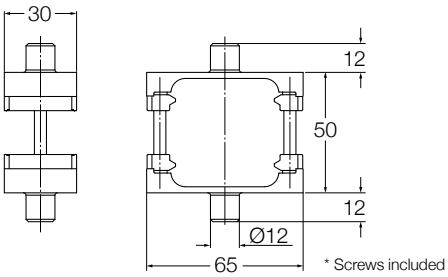

Ordering key
ZBE–375508–32

Trunnion support pair

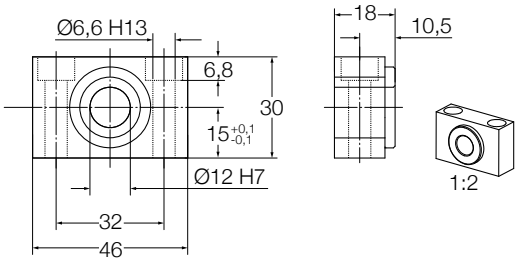

Ordering key
ZBE–375509–32

Note: To be used with trunnion flange kit or trunnion mounting kit

Swivel flange*

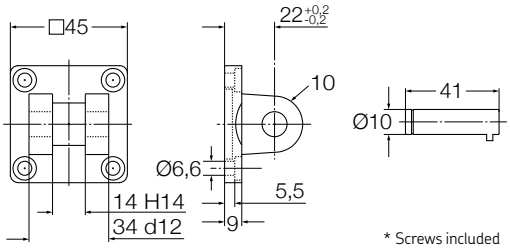

Ordering key
ZBE–375504–32
For parallel version only

Swivel flange with rod end*

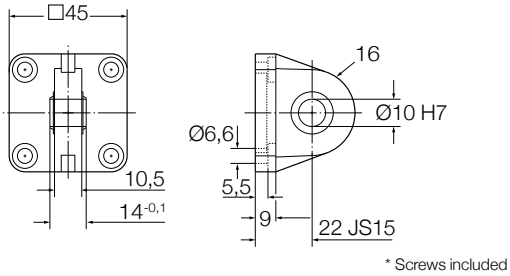

Ordering key
ZBE–375506–32
For parallel version only

Rod clevis

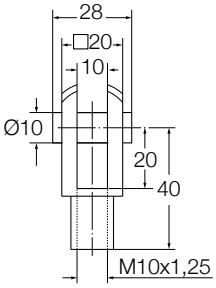

Ordering key
ZBE–375510–32

Rod end

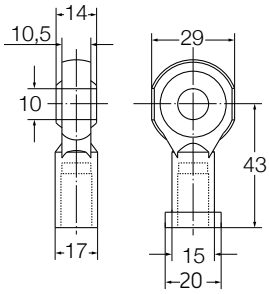

Ordering key
ZBE–375511–32

Proximity sensor

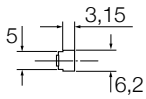

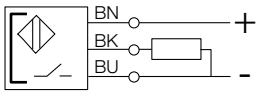

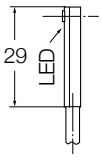

Switching function	Normally open
Output signal	PNP
Rated voltage	24 V DC
Max. current	30 mA
Cable length	5 m

Ordering key
ZSC–375525–NO

CASM-40

Foot mounting kit*

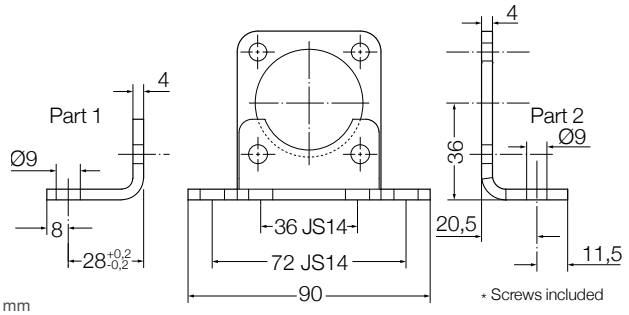

Note: The foot mounting between the linear unit and the adapter kit increases the length of the inline version by 4 mm

Ordering key
ZBE–375501–40
For standard parallel adapter version
ZBE-375501-40/63
For bigger parallel adapter version (valid for ZBE-375603, ZBE-375578, M/0130647 or ZBE-375608 adapter references)

Ordering key
ZBE–375507–40
For inline version (part 1 + part 2)

Flange mounting kit*

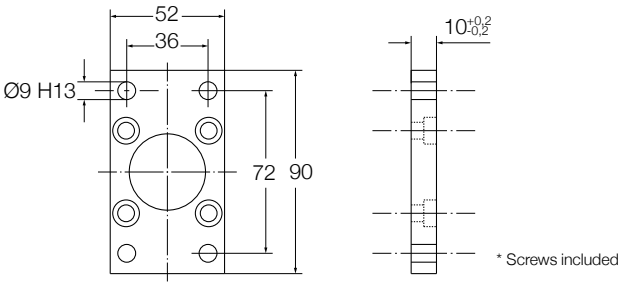

Ordering key
ZBE–375502–40

Trunnion flange kit*

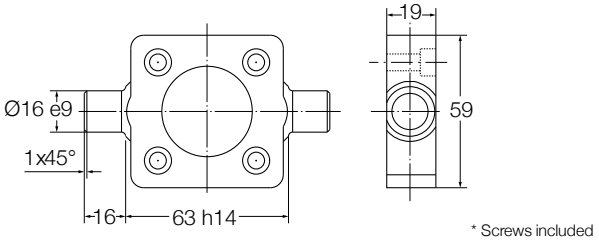

Ordering key
ZBE–375503–40

Trunnion mounting kit*

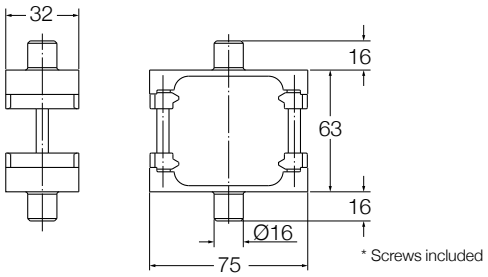

Ordering key
ZBE–375508–40

Trunnion support pair

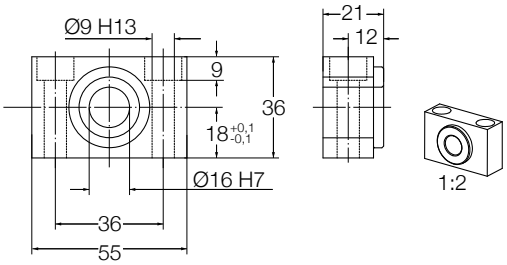

Ordering key
ZBE–375509–40

Note: To be used with trunnion flange kit or trunnion mounting kit

Swivel flange*

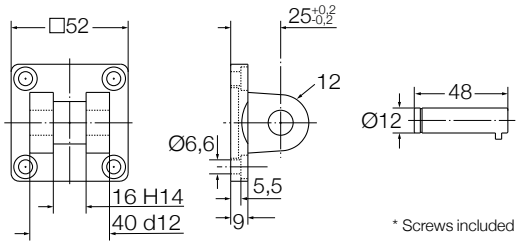

Ordering key
ZBE–375504–40
For parallel version only. For parallel adapters
ZBE-375603 and
ZBE-375578
see CASM-63 equivalent accessories.

Swivel flange with rod end*

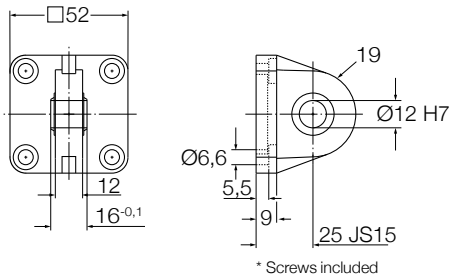

Ordering key
ZBE–375506–40
For parallel version only. For parallel adapters
ZBE-375603 and
ZBE-375578
see CASM-63 equivalent accessories.

Rod clevis

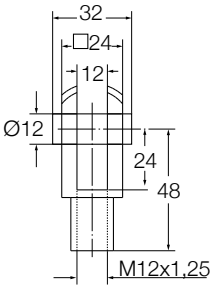

Ordering key
ZBE–375510–40

Rod end

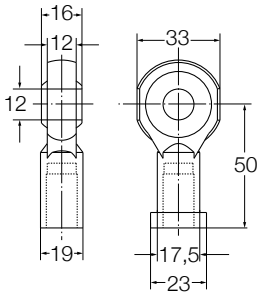

Ordering key
ZBE–375511–40

Proximity sensor

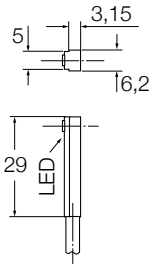

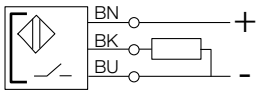

Switching function	Normally open
Output signal	PNP
Rated voltage	24 V DC
Max. current	30 mA
Cable length	5 m

Ordering key
ZSC–375525–NO

CASM-63

Foot mounting kit*

Note: The foot mounting between the linear unit and the adapter kit increases the length of the inline version by 5 mm

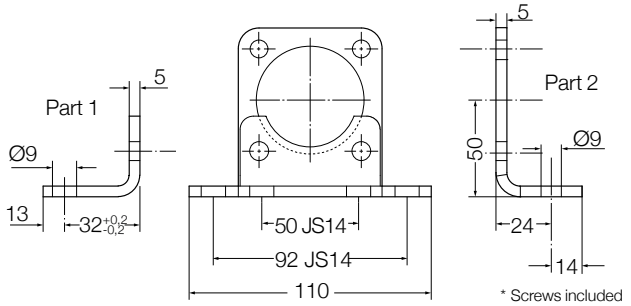

Ordering key
ZBE–375501–63
For parallel version with large adapter (dimensional information on request)

Ordering key
ZBE–375507–63
For inline version (part 1 + part 2)

Flange mounting kit*

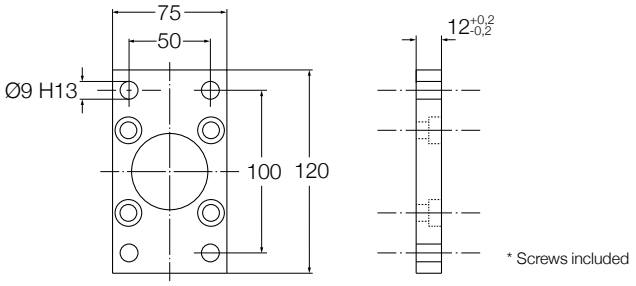

Ordering key
ZBE–375502–63

Trunnion flange kit*

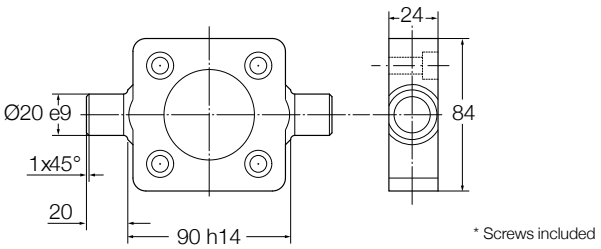

Ordering key
ZBE–375503–63

Trunnion mounting kit*

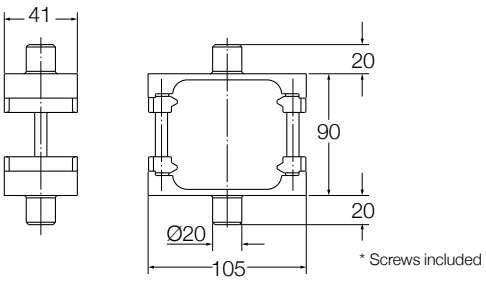

Ordering key
ZBE–375508–63

Trunnion support pair

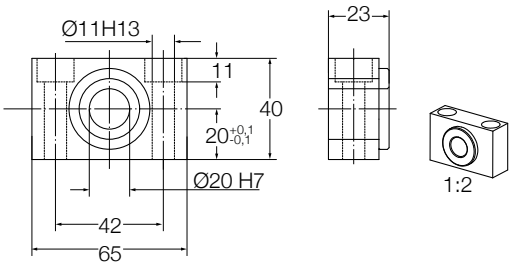

Ordering key
ZBE–375509–63

Note: To be used with trunnion flange kit or trunnion mounting kit

Swivel flange*

Ordering key
ZBE–375504–63
For parallel version only

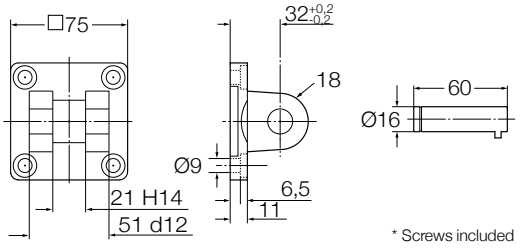

Swivel flange with rod end*

Ordering key
ZBE–375506–63
For parallel version only

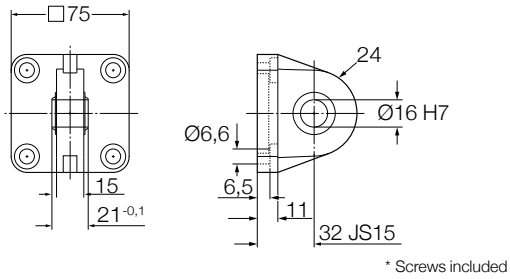

Rod clevis

Ordering key
ZBE–375510–63

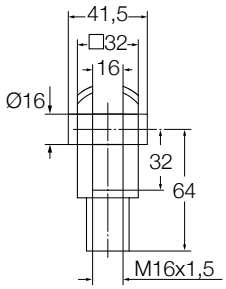

Rod end

Ordering key
ZBE–375511–63

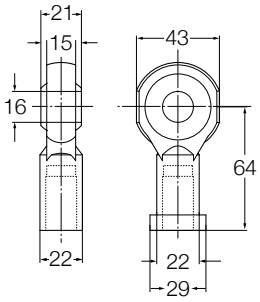

Proximity sensor

Ordering key
ZSC–375525–NO

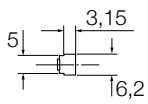

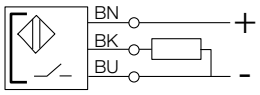

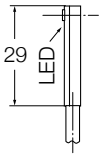

Switching function	Normally open
Output signal	PNP
Rated voltage	24 V DC
Max. current	30 mA
Cable length	5 m

Electric cylinders
CASM-100

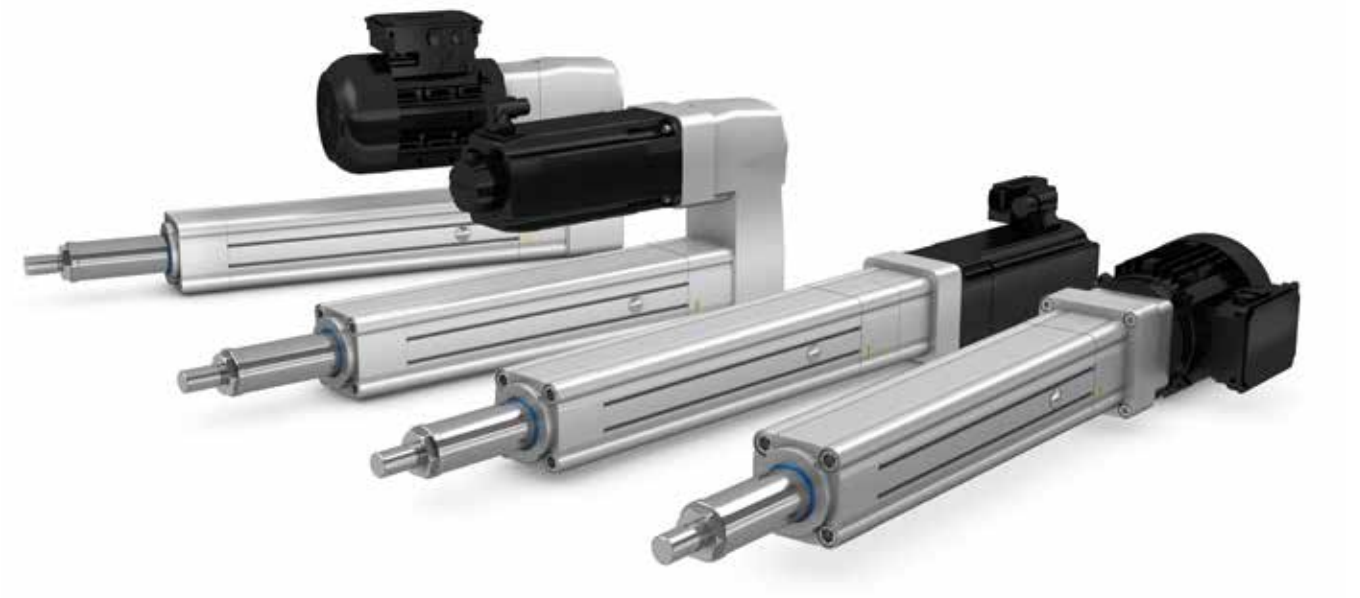

Features

- Electric cylinder with high modularity
- Ball-screws or roller-screws
- Inline and parallel gearboxes
- Standardized interfaces
- High level of precision and repeatability
- Wide range of accessories

Benefits

- For a wide range of applications with different performance and lifetime requirements
- Optimal lifetime even at very high forces
- High level of flexibility with variance of body assembly fitting most of the applications.
- Fits AC motors and servo motors
- Accurate positioning

Product description

Ewellix developed an innovative modular electric cylinder platform to address most of the applications in the automation and heavy machinery industries, mainly replacing hydraulic solutions. In this new design, instead of limiting the selection on the “linear unit - gearbox – motor” modules only, Ewellix takes it a step further. The modularity has been extended to the base component level. Within each module, the customer can select the components inside to build a custom-like solution as standard. This concept makes it possible to find the optimal solution for almost every application within its power range with the best performance/cost ratio.

To facilitate customers in defining their own actuator, Ewellix has released an online configurator on Ewellix.com, where you can configure your optimal CASM-100 cylinder in just a few steps. Since the cylinders are assembled with standard components, any customer defined configuration will not influence the lead time.

To meet any space and performance requirements, Ewellix provides inline and parallel gearboxes as well as AC and servo motors. All motors are equipped with specific adapters to keep the same mechanical interface, independent of the selected motor type.

This standardized interface allows customers to also attach their own preferred motor, that customers are already familiar with (motor and drives).

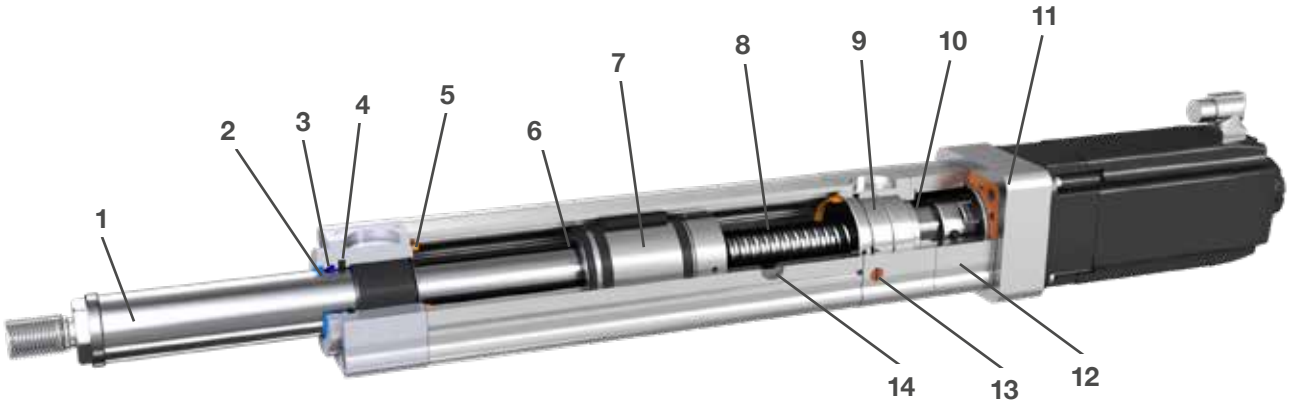

1. Push tube
2. Wiper ring
3. Solid oil ring
4. Sealing ring
5. Rubber bumper
6. Magnet ring for optional proximity sensors
7. Nut with guiding rings and anti-rotation
8. High quality ball and roller screws with low axial play and low friction
9. High quality bearings
10. Radial shaft sealing ring
11. Motor adapter and motor
12. Gearbox
13. Sinter filter for high airflow
14. Relubrication port

System overview

The CASM-100 modular system comprises different components that are connected to each other through standardized interfaces.

Each component provides a unique function for the complete system and is connected as shown below.

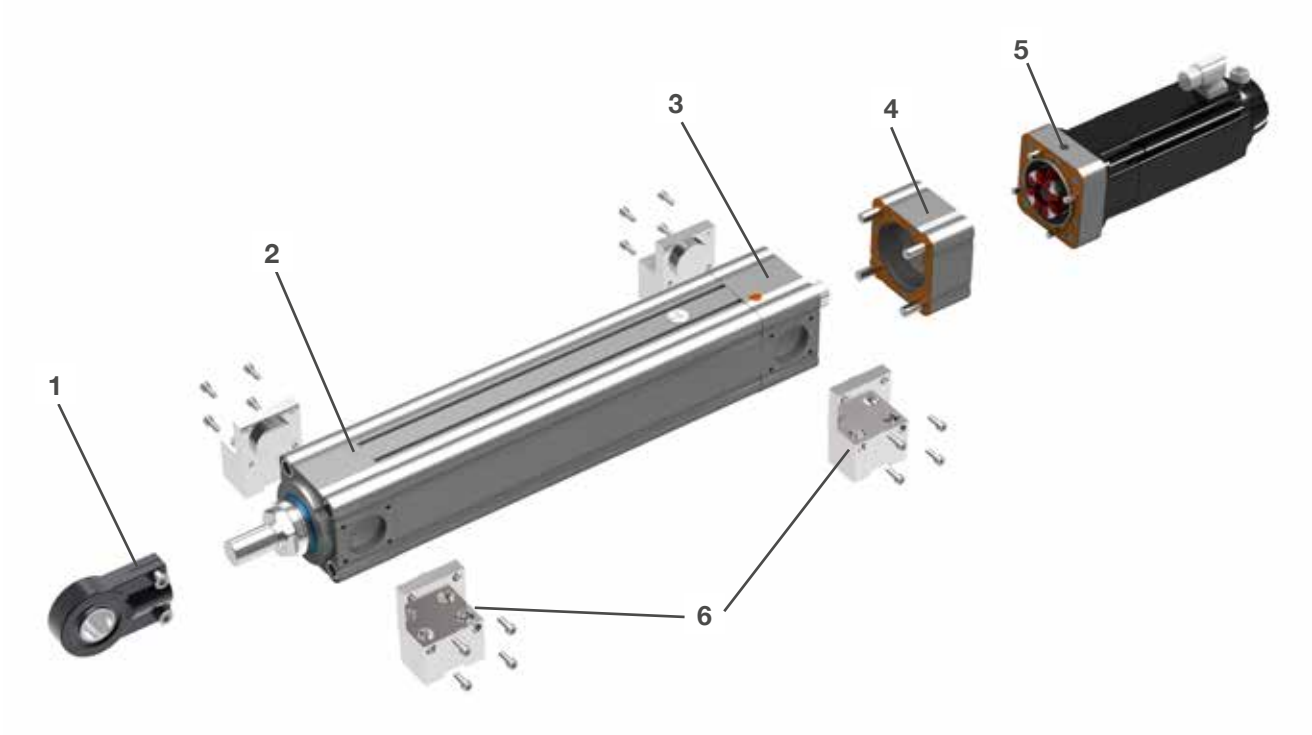

1. Front attachment: mechanical connection between the actuator and the moving part of the application. It is screwed to the push tube through the standard male thread.
2. Front housing: component that supports the push tube, through a dedicated bushing, also including the front sealing package
3. Bearing housing: component that contains the set of ball bearings that support the screw shaft
4. Gearbox: connecting module between the linear unit and the motor adapter. Is available in parallel or inline versions, with different reduction ratios
5. Motor adapter: connecting module between the gearbox and the electric motor
6. Housing attachments: actuator body attachments, connected to the fix part of the application. Depending on the attachment type, they can be installed on the different housings - front, bearing or gearbox.

Performance overview of linear units

Linear unit	F_{max} kN	F_{0max} kN	V_{max} mm/s
CASM-100-BA	23	52	260
CASM-100-BB	48	60	210
CASM-100-BC	60	60	750
CASM-100-RA	82	82	890

Performance overview of actuators

Linear unit	Motor –	Adapter –	F_{c0} kN	F_{p0} kN	V_{max} mm/s
CASM-100-BA	1FK7044	inline	2,4	7,0	260
CASM-100-BA	1FK7064	inline	6,4	17,1	260
CASM-100-BA	1FK7086	inline	15	23,0	260
CASM-100-BA	1FK7105	inline	23,0	23,0	260
CASM-100-BB	1FK7044	inline	2,4	6,9	210
CASM-100-BB	1FK7064	inline	6,4	17,1	210
CASM-100-BB	1FK7086	inline	14,9	48,0	210
CASM-100-BB	1FK7105	inline	25,6	48,0	210
CASM-100-BC	1FK7044	inline	1,2	3,5	750
CASM-100-BC	1FK7064	inline	3,2	8,5	750
CASM-100-BC	1FK7086	inline	7,5	28,0	750
CASM-100-BC	1FK7105	inline	12,8	40,0	750
CASM-100-RA	1FK7044	inline	2,3	6,5	750
CASM-100-RA	1FK7064	inline	6,0	16,1	500
CASM-100-RA	1FK7086	inline	14,1	52,8	500
CASM-100-RA	1FK7105	inline	24,1	75,5	500

Motors

Servo motors

The Siemens motors provided by Ewellix come with a differential resolver or multi-turn encoder, a shaft-end with keyway and a holding brake. In addition, they are equipped with a Drive-CLiQ interface. A rotating plug adapter simplifies the connection and cable routing in all installation positions. For more information, please visit the following sites:

Motor:
www.siemens.com/motors
Frequency converters:
www.siemens.com/sinamics
Automation systems:
www.siemens.com/simotion
Controls:
www.siemens.com/simatic
Engineering software:
www.siemens.com/sizer
Support worldwide:
www.siemens.de/service

Motor technical data

Motor type		1FK7044-4CH71-1UH0	1FK7064-4CF71-1RB0	1FK7086-4CF71-1RB0	1FK7105-2AF71-1RB0
Designation	**Unit**				
Rated power (100K)	kW	1,4	2,5	3,75	8,2
Rated speed	min^{-1}	4 500	3 000	2 000*	3 000
Rated current	A	3,9	7,6	5,7	18
Rated torque (100K)	Nm	3	8	6,5	26
Static torque (100K)	Nm	4,5	12	28	48
Peak torque	Nm	13	32	105	150
Brake holding torque	Nm	4	13	22	43
Inertia with brake	10^{-4} kgm^2	1,62	8,5	25,5	162
Weight with brake	kg	8	16,8	26	43,5
Sensor type	–	Resolver	Multiturn encoder	Multiturn encoder	Multiturn encoder

* Maximum speed is 3 000 with lower torque

Motor adapter

The modular system of CASM-100 enables the use of virtually any kind of motor.

The motor adapter module makes your motor fit the entire CASM-100 range, independent of the configuration. In fact, thanks to the standardized mechanical interface,this module can be directly attached to any inline or parallel gearbox. Sealings, screws and half coupling parts are included in the package. Each motor adapter is provided with blind threaded hole M12 to screw an eye bolt for easier actuator handling.

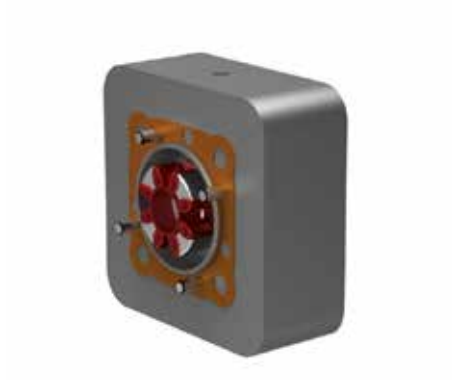

Dimensional drawing

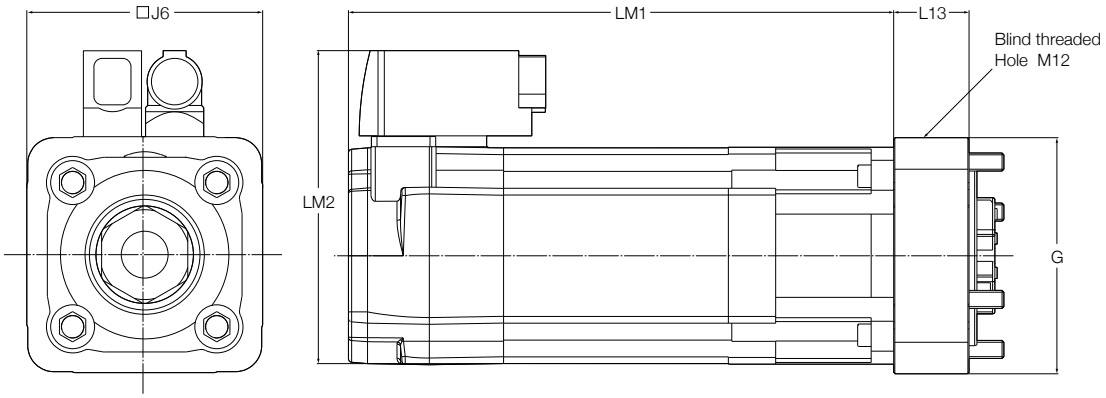

	Motor			Motor adapter	
	LM1	LM2	J6	G	L13
–	mm				
CAM-MS-B0-A11	242,5	139,5	□ 96	□ 105	44,5
CAM-MS-B0-A12	302,5	167,5	□ 126	□ 125	54,5
CAM-MS-B0-A13	309,5	216,5	□ 155	□ 139	62,5
CAM-MS-B0-A14	340	253	□ 192	□ 192,5	85,5

Third party motors

In order to attach your preferred motor to the gearbox, Ewellix offers motor adapter flanges for the most common motor types. If your motor does not fit the following specifications, please contact Ewellix.

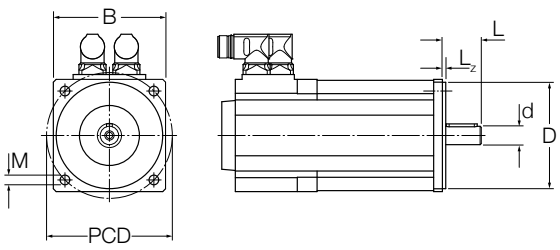

Table 1

Type	D [mm]	PCD [mm]	L [mm]	M	B [mm]	L_z [mm]	d [mm]
AA1	80	100	40	M6	≤ D + 6	< 7	19
AA2	110	130	50	M8	≤ D + 6	< 7	24
AA3	130	165	58	M10	≤ D + 6	< 7	32
AA4	180	215	80	M12	≤ D + 6	< 7	38
CC1	80	100	40	M6	≤ D + 6	< 7	16
CC2	110	130	40	M8	≤ D + 6	< 7	19
CC3	130	165	50	M10	≤ D + 6	< 7	24
CC4	70	90	40	M5	≤ D + 6	< 7	19
CC5	110	145	57	M8	≤ D + 6	< 7	22

Ordering key

C A M - M S - ☐☐ - ☐☐☐ - 0 0 0

Type

A	Interface according to IEC AC XX B14A
S	Interface according to **table 1** (↳ **page 135**)

Delivery

Motor supplied and mounted by Ewellix (A11-A14 only)

B0-A11	Siemens 1FK7044-4CH71-1UH0
B0-A12	Siemens 1FK7064-4CF71-1RB0
B0-A13	Siemens 1FK7086-4CF71-1RB0
B0-A14	Siemens 1FK7105-2AF71-1RB0
B0-A61	Siemens 1LE1001-0CA32-2KB4-Z=F01+F11+G11
B0-A62	Siemens 1LE1001-0CB32-2KB4-Z=F01+F11+G11
B0-A63	Siemens 1LE1003-0DA32-2KB4-Z=F01+F11+G11
B0-A64	Siemens 1LE1003-0DB32-2KB4-Z=F01+F11+G11
B0-A65	Siemens 1LE1003-0EA02-2KB4-Z=F01+F11+G11
B0-A66	Siemens 1LE1003-0EB02-2KB4-Z=F01+F11+G11
B0-A67	Siemens 1LE1003-1AA42-2KB4-Z=F01+F11+G11
B0-A68	Siemens 1LE1003-1AB42-2KB4-Z=F01+F11+G11

Motor adapter only

00-AA1	Siemens 1FK7044 series
00-AA2	Siemens 1FK7064 series
00-AA3	Siemens 1FK7086 series
00-AA4	Siemens 1FK7105 series
00-AC1	IEC AC 71 B14A
00-AC2	IEC AC 80 B14A
00-AC3	IEC AC 90 B14A
00-AC4	IEC AC 100 B14A
00-XXX	Customized flanges, dimension see table on **page 135**

Customer option

000	No option

Gearboxes

Inline gearbox

Inline gearboxes consist of a housing which fits on one side to the linear unit and on the other side to the motor adapter with the matching coupling. The coupling can be pushed on the shaft of the linear unit and locked by a screw. The counterpart of the coupling is delivered with the motor adapter.

The inline gearbox transmits the motor torque (max. 150 Nm) directly to the linear unit with a gear ratio 1:1 and is maintenance-free.

Dimensional drawing

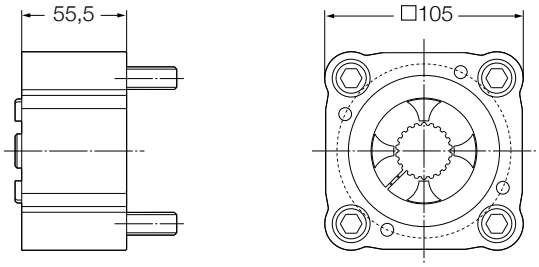

All dimensions in mm

Complete actuator

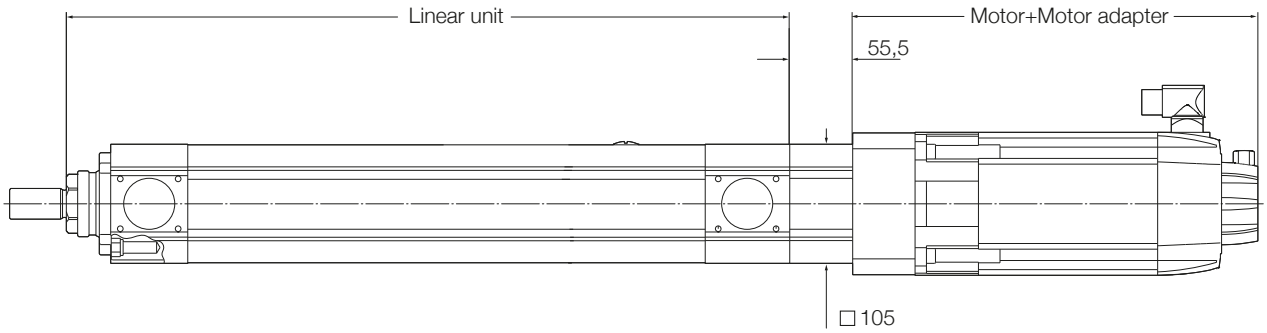

All dimensions in mm

Parallel gearbox

Parallel gearbox consists of one housing which fits on one side to the linear unit and on the other side to the motor adapter with the matching coupling. The coupling is already mounted on the input shaft of the gearbox and locked by a screw. The counterpart of the coupling is delivered with the motor adapter.

The parallel gearbox transmits the motor torque through three stage spur gear directly to the linear unit (max. output torque 300 Nm). Three gear ratios are available and it is maintenance free.

Technical data

Gearbox type Short designation	Unit	CAM-GS-CBA-XX	CAM-GS-CCA-XX	CAM-GS-CDA-XX
Type	–	Parallel	Parallel	Parallel
Gear reduction	–	3,89	9,82	24,95
Nominal output torque	Nm	100	100	100
Max. output torque	Nm	300	300	300
Max. input power	W	3 000	3 000	3 000
Max. input speed	r/min	4 500	4 500	4 500
Efficiency	%	85	85	85
Weight	kg	9	9	9
Length	mm	98,5	98,5	98,5

Manual override

The parallel gearbox has a manual override as built-in functionality. The gearbox can be manually operated through a hexagonal key located on the gearbox motor axis. As standard, the access to this key is covered by a plate (↳ **fig. 1**). On request, it's possible to have a round opening for direct access (↳ **fig. 2**) or to mount an electromagnetic brake (↳ **fig. 3**).

Speed limiting centrifugal brake

When safety is non-negotiable, a centrifugal brake (↳ **fig. 4**) can be a useful device. It is recommended together with a electro-mechanical brake on the motor. When releasing such a brake, the applied load may cause a rapid retraction of the machine, if no centrifugal brake is used. A centrifugal brake can be adjusted to the application in order to limit the retracting speed to a safe value. The centrifugal brake is mounted similar to an electromagnetic brake (↳ **fig. 3**). The following table give parameters example:

Engagement speed	n_eng	2 200 rpm ± 150 rpm
Torque	Tk	10 Nm @ 2 800 rpm ± 150 rpm

Fig. 1

Fig. 2

On request

Fig. 3

On request

Fig. 4

Dimensional drawing

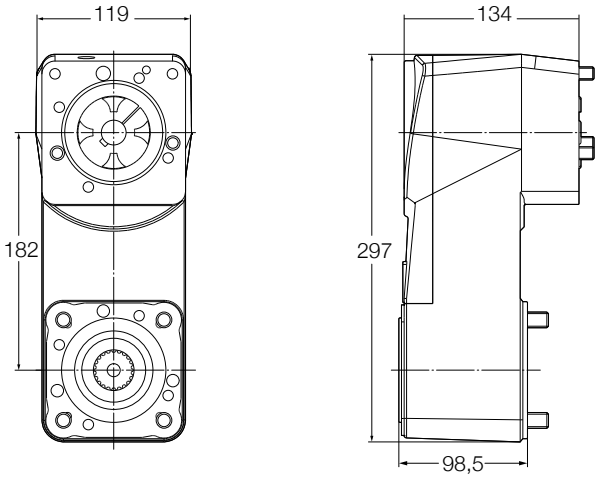

All dimensions in mm

Complete actuator

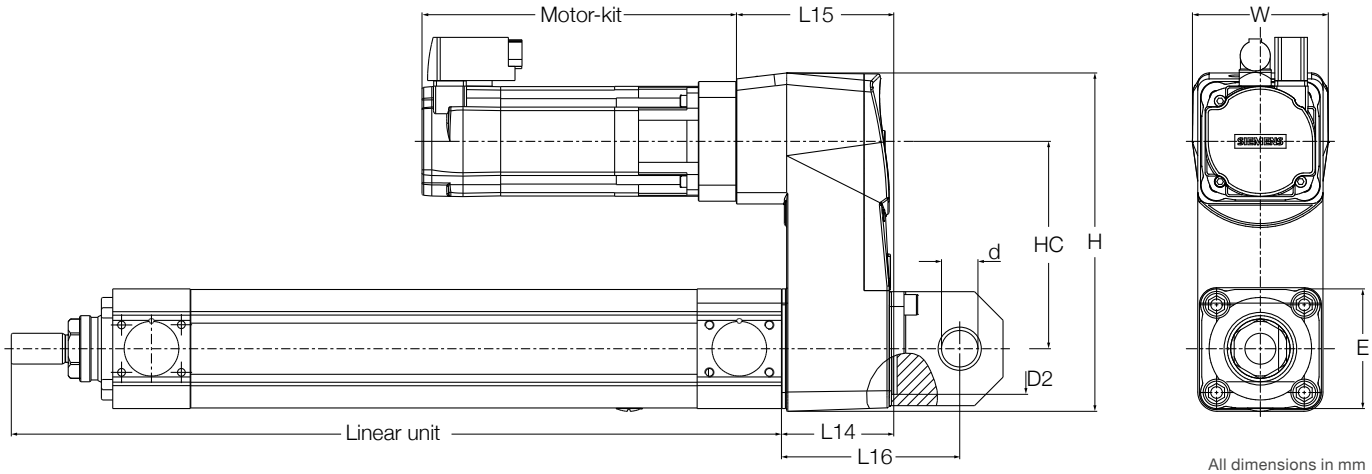

All dimensions in mm

Gear type	H	HC	L14	L15	L16	d	D2	W	E
CAM-GD-AXA-XX	297	182	98,5	138	156,5	Ø32 H7	Ø80 $^{0}_{-0,1}$	119	□ 105

Rear attachment option

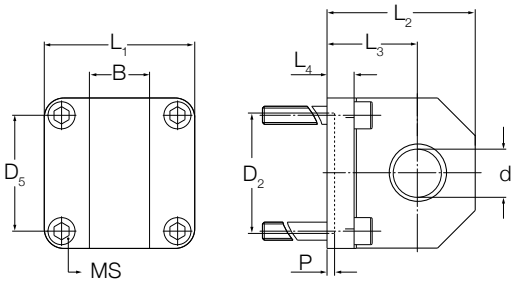

Ordering key
ZBE-377921

Type	MS	d	B	L_1	L_2	L_3	L_4	D_2	P	D_5	m
–	–	mm									kg
ZBE-377921	M12 × 140	Ø32 H7	40	□ 100	98	60	11	Ø80	5	□ 77	3

Ordering key

C A M - G I - A A A - 0 0 - 0 0 0

Type

I	Inline
S	Spur

Gear size

A	Small Inline Servo motors
B	Small Inline Asynchronous motors
C	Small Parallel Spur Gear

Ratio

A	1 : 1 (only for inline)
B	4 : 1 (↳ **page 138** for exact ratio)
C	10 : 1 (↳ **page 138** for exact ratio)
D	25 : 1 (↳ **page 138** for exact ratio)

Options

A	Aluminum housing, standard lubrication for spur gearbox / no lubrication for inline gearbox

Rear attachment

0	No
B	Rear 0°
C	Rear 90°

Free parameter

0	Empty

Customer option

000	No option

Mounting position parallel gearbox rear attachment

The 0° reference for the parallel gearbox rear attachment is the gearbox itself. The rear attachment can be turned in 90° step (↳ **fig. 4**).

Fig. 4

Gearbox orientation

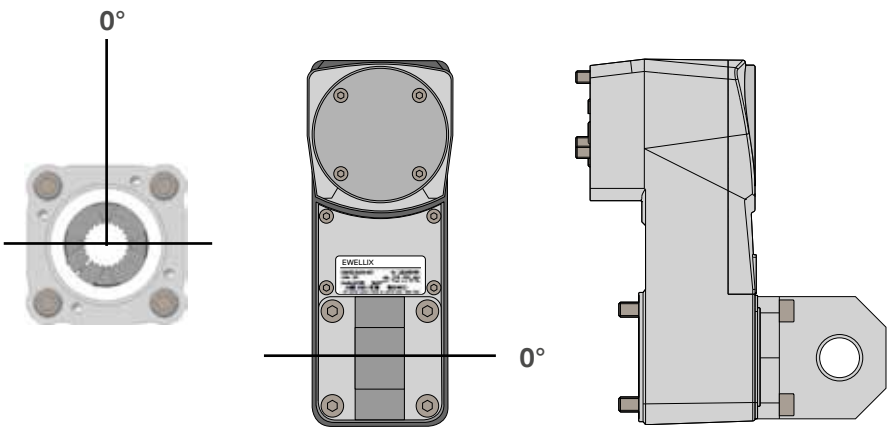

Examples of linear unit, parallel gearbox and IEC AC motor combinations

The table below is a guidance to understand the performance levels that can be reached by using CAM-GS gearbox with standard IEC AC asynchronous motors, in terms of maximum dynamic axial force and linear speed.

In particular, by selecting the desired force and speed range, it's possible to quickly see which combination of screw, gearbox and asynchronous AC motors fulfil the application needs. This is a generic guidance, while the detailed performance values of each mentioned combination should be calculated.

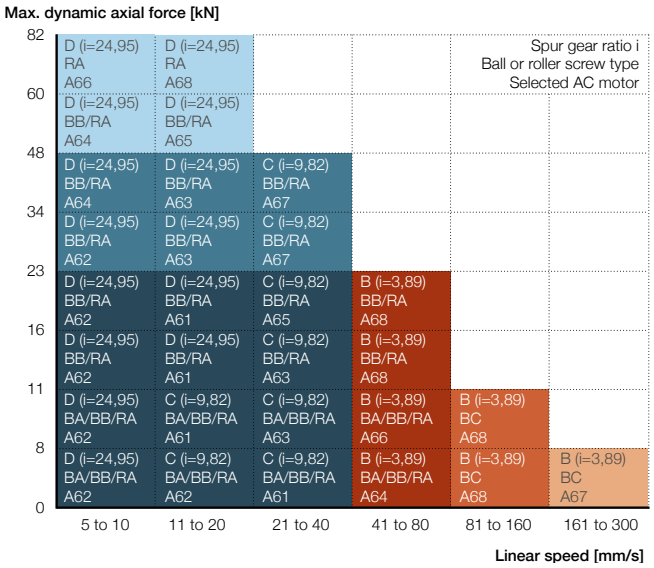

IEC AC Motors

The Siemens SIMOTICS low-voltage electric motors provided by Ewellix comes with a holding brake and PTC thermistor as standard.

It is a SIMOTICS GP 1LE1 self-ventilated aluminium motor with standard terminal box.

In addition, the motors are equipped with a two channel rotary pulse encoder as feedback.

Motor type[1] Designation	Size	Type	Rated power	Rated speed	Rated current	Rated torque	Efficiency level	Motor weight	Motor inertia	Brake inertia
			kW	RPM	A	Nm	–	kg	kgm²	kgm²
A61	IEC-71-2	2 poles / with encoder	0,55	2850	1,34	1,8	IE2	7	0,00045	0,000013
A62	IEC-71-4	4 poles / with encoder	0,37	1410	0,99	2,6	IE2	7	0,00095	0,000013
A63	IEC-80-2	2 poles / with encoder	1,1	2885	2,25	3,6	IE3	12	0,0013	0,000045
A64	IEC-80-4	4 poles / with encoder	0,75	1450	1,75	4,9	IE3	14	0,0029	0,000045
A65	IEC-90-2	2 poles / with encoder	2,2	2910	4,2	7,2	IE3	19	0,0031	0,00016
A66	IEC-90-4	4 poles / with encoder	1,1	1440	2,4	7,3	IE3	16	0,0036	0,00016
A67	IEC-100-2	2 poles / with encoder	3	2920	5,6	9,8	IE3	26	0,0054	0,00036
A68	IEC-100-4	4 poles / with encoder	2,2	1465	4,4	14,3	IE3	30	0,014	0,00036

[1] Voltage 400 VΔ, 50Hz

Example

Selected performance values

- Max dynamic axial force: = 34 kN
- Linear speed: = 11 - 20 mm/s

Resulting combination

- Gear reduction: 24,95
- Screw type: Ball screw or roller screw
- Screw diameter: 40 mm (ball screw) or 30 mm (roller screw)
- Screw lead: 10 mm
- Motor type: Asynchronous AC
- Motor size: A63

Complete actuator combinations

The built-in modularity of the CASM-100 actuator allows customers to create tailor-made solutions through a vast number of standard components.

Considering the different types and sizes of screws, gearboxes, motors, push tubes, bearing units, sealing kits and attachments available, several hundreds of combinations are possible.

Each of them can deliver a unique performance to fulfill even the most demanding application requirements.

For that reason, the following pages are presenting datasheets only or the linear units for one of the possible actuator combinations (i.e. linear units with 4 screws - inline adapter - servo motors), as an example.

To create the optimal actuator combination for your application, the CASM-100 configurator is the best supporting tool. The software is available on Ewellix website in the section CASM-100 CONFIGURATOR.

Manuals

Supporting documents are available for download on ewellix.com

- operating manual

3D models

Product configurators for 3D models are available on ewellix.com

Operating manual

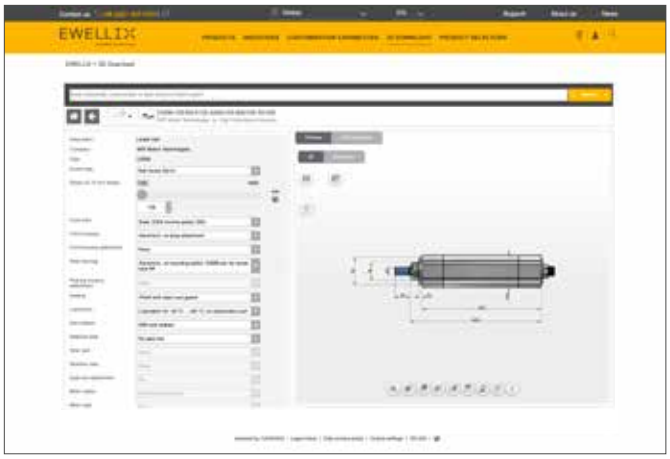

3D model configurator

CASM-100

Linear unit

Technical data

Designation	Symbol	Unit	CASM-100-BA	CASM-100-BB	CASM-100-BC	CASM-100-RA
Performance Data						
Max. dynamic axial force[1]	F_{max}	kN	23	48	60	82
Max. dynamic axial force L10[2]	F_{L10}	kN	22	47	60	50
Max. static axial force	F_{0max}	kN	52	60	60	82
Dynamic load capacity	C	kN	27,1	61,5	41,3	106
Maximum torque to reach F_{max}	T_{max}	Nm	43	90	225	163
Max. linear speed	v_{max}	mm/s	260	210	750	890
Max. rotational speed	n_{max}	1/min	1 560	1 260	2 250	5 340
Max. acceleration	a_{max}	m/s^2	6	6	12	12
Duty cycle	D_{unit}	%	100	100	100	100
Mechanical Data						
Screw type	–	–	Ball screw	Ball screw	Ball screw	Roller screw
Screw diameter	d_{screw}	mm	32	40	40	30
Screw lead	p_{screw}	mm	10	10	20	10
Lead accuracy	–	–	G9	G9	G9	G5
Stroke[3) 4)]	s	mm	50…2 000	50…2 000	50…2 000	50…2 000
Internal overstroke each side	s_0	mm	2	2	2	2
Backlash	$s_{backlash}$	mm	0,2	0,2	0,2	0,2
Efficiency	η_{lu}	%	> 85	> 85	> 85	> 80
Inertia @ 0 mm stroke	J_{lu}	kgm^2	0,00041	0,00051	0,00051	0,00045
Δ Inertia per 100 mm	ΔJ	kgm^2	0,000064	0,000144	0,000138	0,000063
Weight @ 0 mm stroke	m_{lu}	kg	11	12,7	12,3	12,5
Δ weight per 100 mm	Δm	kg	2,4	2,7	2,7	2,4
Environment						
Ambient temperature	$T_{ambient}$	°C	–20…+50	–20…+50	–20…+50	–10…+50
Max. humidity	ϕ	%	95	95	95	95
Degree of protection	IP	–	54S	54S	54S	54S

1) Buckling limitation for long strokes, also limited by accessories and configurations. Please check the CASM-100 configuration tool on ewellix.com
2) Maximum dynamic axial force usable to apply the theoretical lifetime calculation (L10)
3) Preferred stroke range:
from 50 to 1 000 mm stroke is by 50 mm step (50, 100, 150, …, 900, 950, 1 000)
from 1 000 to 2 000 mm stroke is by 100 mm step (1 100, 1 200, …, 1 900, 2 000, valid for BA, BB and BC screw type excluding RA one)
For all other strokes, out of the preferred range, consider an additional 1 week on standard leadtime. Please contact Ewellix
4) On CASM-100-RA and stroke > 1000 mm, please contact Ewellix

Dimensional drawing

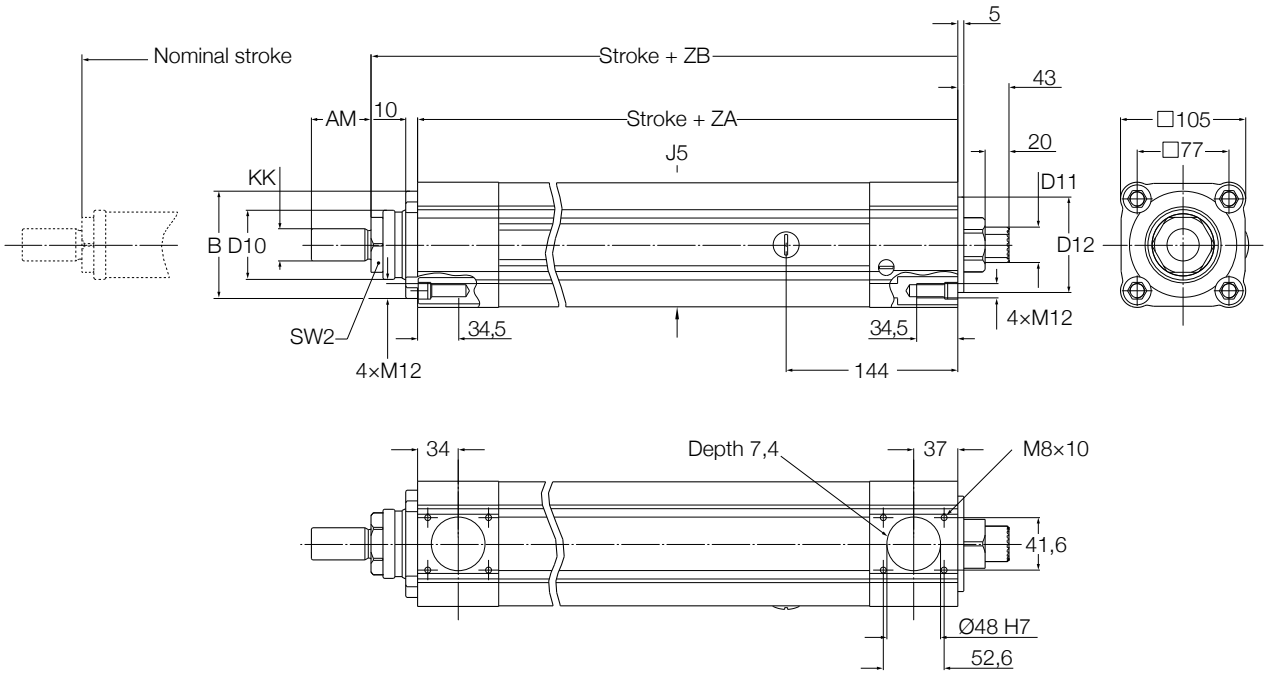

Linear Unit	KK	SW2	J5	ZA	ZB	B		D10	AM	D12		D11
–	–	–	mm									–
CASM-100-xx-xxxx-A…	M27 × 2	AF 46	□ 104	287±1,5	326±2	Ø90	$^{-0,10}_{-0,35}$	Ø58	50	Ø80	$^{-0}_{-0,05}$	Spline DIN 5480 W 30x1,25x22x8f

Performance diagram

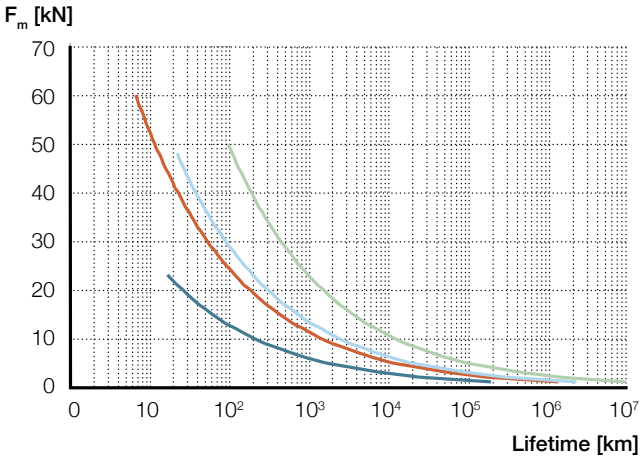

- CASM-100-BA
- CASM-100-BC
- CASM-100-BB
- CASM-100-RA

Ordering key

See **page 148**

Options

The following parts are available as options and can be ordered directly through the typekey. It is not necessary (but optional) to order as extra lines if already configured and selected in the typekey.

Front Plate

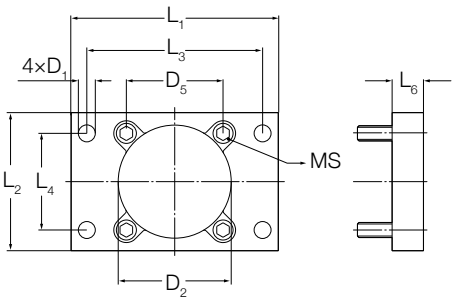

Ordering key
ZBE-377918

Type –	MS –	L_1 mm	L_2	L_3	L_4	D_1	D_5	D_2	L_6	m kg
ZBE-377918	M12 × 40	165	109	140	77	Ø13,5	□ 77	Ø90	25	2,1

Foot Mount

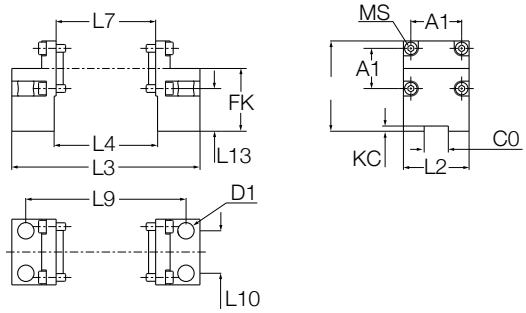

Ordering key
ZBE-377920

Type –	MS –	L_1 mm	L_2	L_3	L_4	L_7	FK	A_1	A_2	L_9	L_{10}	KC	C0	L_{13}	D_1	m kg
ZBE-377920	M8 × 20	93,5	68	194,8	107	103	65	52,6	41,6	165,8	44	5,4	25	50	Ø17	2,8

Mounting kits
Pivot Attachment

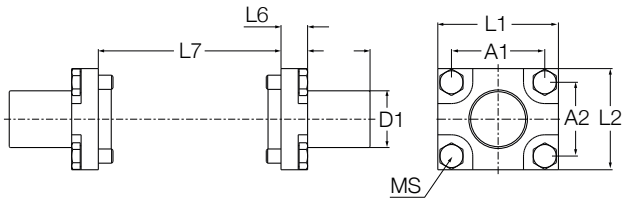

Ordering key
ZBE-377919

Type –	MS –	L_1 mm	L_2	A_1	A_2	L_5	L_6	L_7	D_1	m kg
ZBE-377919	M8 × 18	68	57	52,6	41,6	35,2	15	103	Ø32	1,5

Pivot attachment

Load rating and lifetime limitation on the pivot mount, see graph below.

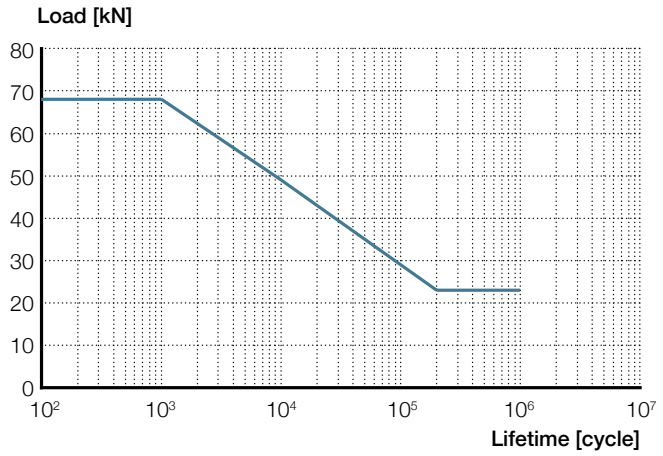

Ingress protection

The linear unit is available with the following ingress protection options (note that IP ratings are valid if the bearing housing is sealed by Ewellix gearbox or others with similar sealing performances):

Option B: IP54S

Protected against dust and water spray if standing still.

Option C: IP65 with sinter filter

Requiring sinter filter to be protected from dust and water. As a consequence it is required to face sinter filter downwards to protect it from rain. If not possible to protect the sinter filter, and to ensure ingress protection level, please take option D (see below).

In addition, and due to the use of solid oil ring and single lip wiper on the front, performances are restricted to avoid premature wear on the sealing. It restricts performances to the following:

Max linear speed	Vmax	35 mm/s
Lifetime distance driven	L	100 km

Option D: IP65 with hose

If selected, a dedicated interface valve is provided and mounted on the linear unit, allowing the actuator to breath. A hose (not provided by Ewellix) need to be connected to this interface valve in order to supply it with clean air.

It still restricts performances as indicated for Option C.

3

Interface valve

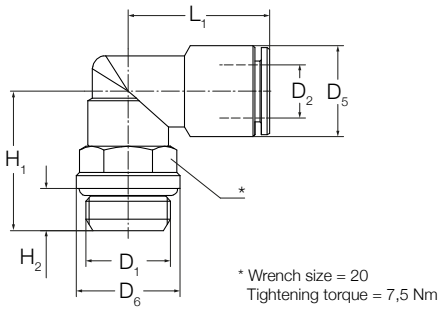

G thread with sealing ring							
Connections	**Tubing O.D.**						**Weight/ piece**
D1	**D2**	**D5**	**D6**	**H1**	**H2**	**L1**	
–	Ø	Ø	Ø				g
G 1/4	12	19,0	16,0	25,5	6,5	28,5	58,5

Ordering key

Linear unit

C A S M - 1 0 0 - B C - 0 1 0 0 - A A 0 C 1 0 A - B A 1 1 0 0 - 0 0 0

Size

Screw type

BA	Ball screw 32 × 10
BB	Ball screw 40 × 10
BC	Ball screw 40 × 20
RA	Roller screw 30 × 10

Stroke

–	Stroke in mm

Push tube

A	E355 chrome plated, Ø55

Front housing and attachments

A	Aluminum, no mounting option
B	Aluminium, with body attachment

Front housing attachment

0	None
A	Front plate 90° mounting position
B	Front plate 0° mounting position
C	Pivot attachment (trunnion brackets to be ordered separately)
D	Foot mount, 0° mounting position
E	Foot mount, 180° mounting position

Rear housing

A1	Aluminum, no mounting option, reduced static load, for screw type BA[1]
B1	Aluminum, no mounting option, reduced static load, for screw type BA[1]
C1	Aluminum, no mounting option, for all screw types
D1	Aluminum, prepared for pivot or foot mounting, for all screw types

Rear housing attachment

0	None
C	Pivot attachment (trunnion brackets to be ordered separately)
D	Foot mount, 0° mounting position
E	Foot mount, 180° mounting position

Protection tube

A	Aluminium, 90°, recommended for parallel
B	Aluminium, 180°
C	Aluminium, 270°
D	Aluminium, 0°, recommended for inline

[1] Maximum static axial force limited to 31 kN

C A S M - 1 0 0 - B C - 0 1 0 0 - A A 0 C 1 0 A - B A 1 1 0 0 - 0 0 0

Sealing
B IP54S
C IP65 with sinter filter
D IP65 with hose

Lubrication
A Standard Lubrication for ball screws
B Standard Lubrication for roller screws

Relubrication
0 No relubrication possibility
1 With relubrication possibility

Anti-rotation
0 No anti-rotation
1 With anti-rotation

Free parameter
00 Empty

Customer option
000 No option

Mounting position front plate and foot mount

The 0° reference for the linear unit is the sinter filter position. The front plate can be turned in 90° steps clockwise. The foot mount can be turned in 180° steps clockwise.

Fig. 5

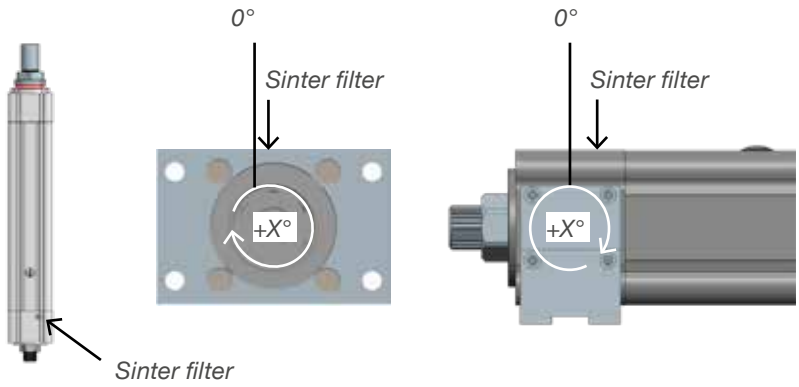

CASM-100-BA

Electric cylinder servo motor, inline configuration

Technical data

Designation	Symbol	Unit	1FK7044	1FK7064	1FK7086	1FK7105
Performance Data						
Continuous force @ zero speed	F_{c0}	kN	2,4	6,4	15,0	23,0
Continuous force @ max. speed	F_c	kN	2,2	5,9	11,2	21,4
Peak force @ zero speed	F_{p0}	kN	7	17,1	23,0	23
Peak force @ max. speed	F_p	kN	7	17,1	23,0	23
Dynamic load capacity	C	kN	27,1	27,1	27,1	27,1
Holding force (motorbrake option)	F_{Hold}	kN	3,5	9,1	16,1	23
Max. linear speed	v_{max}	mm/s	260	260	260	260
Max. acceleration	a_{max}	m/s^2	6	6	6	6
Duty cycle	D	%	100	100	100	100
Mechanical Data						
Screw type	–	–	Ball screw	Ball screw	Ball screw	Ball screw
Screw diameter	d_{screw}	mm	32	32	32	32
Screw lead	p_{screw}	mm	10	10	10	10
Lead accuracy	-	-	G9	G9	G9	G9
Stroke[1)]	s	mm	100…2 000	100…2 000	100…2 000	100…2 000
Internal overstroke each side	s0	mm	2	2	2	2
Backlash	$s_{backlash}$	mm	0,2	0,2	0,2	0,2
Gear reduction	i	-	1	1	1	1
Efficiency	η	%	77	79	79	80
Inertia @ 0 mm stroke	J	10^{-4} kgm^2	6,16	12,4	26,9	159
Δ Inertia per 100 mm	ΔJ	10^{-4} kgm^2	0,64	0,64	0,64	0,64
Inertia of optional brake	J_{brake}	10^{-4} kgm^2	0,36	1	3,50	8
Weight @ 0 mm stroke	m	kg	19,8	28,7	37,8	56,4
Δ weight per 100 mm	Δm	kg	2,4	2,4	2,4	2,4
Weight of optional brake	m_{brake}	kg	0,6	1,4	3,0	4,5
Electrical Data						
Motor type	–	–	Servo	Servo	Servo	Servo
Nominal voltage	U	V DC	600	600	600	600
Nominal current	I	A	3,9	7,6	5,7	18
Peak current	I_{peak}	A	5,4	10,8	21,5	31
Nominal power	P	kW	1,4	2,5	3,75	8,2
Environment & Standards						
Ambient temperature	$T_{ambient}$	°C	–20…+50	–20…+50	–20…+50	–20…+50
Max. humidity	ϕ	%	95	95	95	95
Degree of protection	IP	–	54S	54S	54S	54S

[1)] Preferred stroke range:
from 50 to 1 000 mm stroke is by 50 mm step (50, 100, 150, …, 900, 950, 1 000)
from 1 000 to 2 000 mm stroke is by 100 mm step (1 100, 1 200, …, 1 900, 2 000)
For all other strokes, out of the preferred range, consider an additional 1 week on standard leadtime. Please contact Ewellix.

Performance diagram

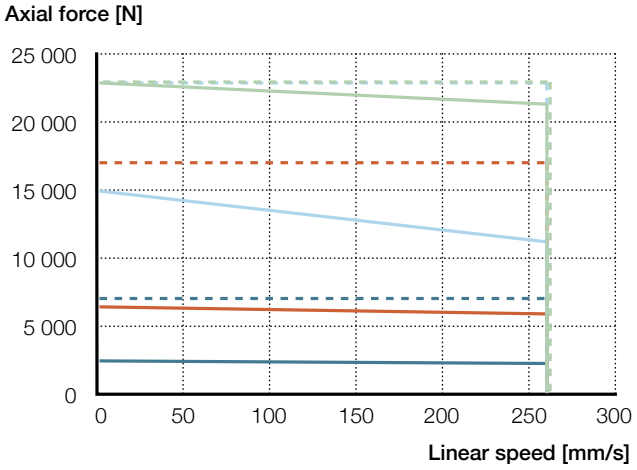

1FK7044	F_{cont}	F_{peak}
1FK7064	F_{cont}	F_{peak}
1FK7086	F_{cont}	F_{peak}
1FK7105	F_{cont}	F_{peak}

Dimensional drawing

See **page 158**

Ordering key

See **page 162**

CASM-100-BB

Electric cylinder servo motor, inline configuration

Technical data

Designation	Symbol	Unit	1FK7044	1FK7064	1FK7086	1FK7105
Performance Data						
Continuous force @ zero speed	F_{c0}	kN	2,4	6,4	14,9	25,6
Continuous force @ max. speed	F_c	kN	2,2	6,1	12,8	21,9
Peak force @ zero speed	F_{p0}	kN	6,9	17,1	48,0	48
Peak force @ max. speed	F_p	kN	6,9	17,1	48,0	48
Dynamic load capacity	C	kN	61,5	61,5	61,5	61,5
Holding force (motorbrake option)	F_{Hold}	kN	3,5	9,1	16,1	29,3
Max. linear speed	v_{max}	mm/s	210	210	210	210
Max. acceleration	a_{max}	m/s^2	6	6	6	6
Duty cycle	D	%	100	100	100	100
Mechanical Data						
Screw type	–	–	Ball screw	Ball screw	Ball screw	Ball screw
Screw diameter	d_{screw}	mm	40	40	40	40
Screw lead	p_{screw}	mm	10	10	10	10
Lead accuracy	-	-	G9	G9	G9	G9
Stroke[1)]	s	mm	100…2 000	100…2 000	100…2 000	100…2 000
Internal overstroke each side	s0	mm	2	2	2	2
Backlash	$_{sbacklash}$	mm	0,2	0,2	0,2	0,2
Gear reduction	i	–	1	1	1	1
Efficiency	η	%	77	79	79	80
Inertia @ 0 mm stroke	J	10^{-4} kgm^2	7,16	13,4	27,9	160
Δ Inertia per 100 mm	ΔJ	10^{-4} kgm^2	1,44	1,44	1,44	1,44
Inertia of optional brake	J_{brake}	10^{-4} kgm^2	0,36	1	3,5	8
Weight @ 0 mm stroke	m	kg	21,5	30,4	39,5	58,1
Δ weight per 100 mm	Δm	kg	2,7	2,7	2,7	2,7
Weight of optional brake	m_{brake}	kg	0,6	1,4	3,0	4,5
Electrical Data						
Motor type	–	–	Servo	Servo	Servo	Servo
Nominal voltage	U	V DC	600	600	600	600
Nominal current	I	A	3,9	7,6	5,7	18
Peak current	I_{peak}	A	5,4	10,8	21,5	31
Nominal power	P	kW	1,4	2,5	3,75	8,2
Environment & Standards						
Ambient temperature	$T_{ambient}$	°C	–20…+50	–20…+50	–20…+50	–20…+50
Max. humidity	ϕ	%	95	95	95	95
Degree of protection	IP	–	54S	54S	54S	54S

[1)] Preferred stroke range:
from 50 to 1 000 mm stroke is by 50 mm step (50, 100, 150, …, 900, 950, 1 000)
from 1 000 to 2 000 mm stroke is by 100 mm step (1 100, 1 200, …, 1 900, 2 000)
For all other strokes, out of the preferred range, consider an additional 1 week on standard leadtime. Please contact Ewellix.

Performance diagram

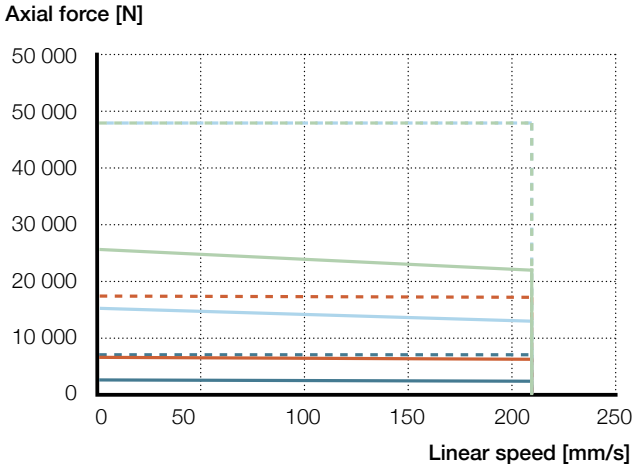

1FK7044	F_{cont}	F_{peak}
1FK7064	F_{cont}	F_{peak}
1FK7086	F_{cont}	F_{peak}
1FK7105	F_{cont}	F_{peak}

Dimensional drawing

See **page 158**

Ordering key

See **page 162**

CASM-100-BC

Electric cylinder servo motor, inline configuration

Technical data

Designation	Symbol	Unit	1FK7044	1FK7064	1FK7086	1FK7105
Performance Data						
Continuous force @ zero speed	F_{c0}	kN	1,2	3,2	7,5	12,8
Continuous force @ max. speed	F_c	kN	1,1	2,5	4	9,3
Peak force @ zero speed	F_{p0}	kN	3,5	8,5	28	40
Peak force @ max. speed	F_p	kN	3,5	8	26,7	40
Dynamic load capacity	C	kN	41,3	41,3	41,3	41,3
Holding force (motorbrake option)	F_{Hold}	kN	1,7	4,5	8	14,7
Max. linear speed	v_{max}	mm/s	750	750	750	750
Max. acceleration	a_{max}	m/s^2	12	12	12	12
Duty cycle	D	%	100	100	100	100
Mechanical Data						
Screw type	–	–	Ball screw	Ball screw	Ball screw	Ball screw
Screw diameter	d_{screw}	mm	40	40	40	40
Screw lead	p_{screw}	mm	20	20	20	20
Lead accuracy	-	–	G9	G9	G9	G9
Stroke[1)]	s	mm	100…2 000	100…2 000	100…2 000	100…2 000
Internal overstroke each side	s0	mm	2	2	2	2
Backlash	$s_{backlash}$	mm	0,2	0,2	0,2	0,2
Gear reduction	i	-	1	1	1	1
Efficiency	η	%	77	79	79	80
Inertia @ 0 mm stroke	J	10^{-4} kgm^2	7,16	13,4	27,9	160
Δ Inertia per 100 mm	ΔJ	10^{-4} kgm^2	1,38	1,38	1,38	1,38
Inertia of optional brake	J_{brake}	10^{-4} kgm^2	0,36	1	3,5	8
Weight @ 0 mm stroke	m	kg	21,1	30	39,1	57,7
Δ weight per 100 mm	Δm	kg	2,7	2,7	2,7	2,7
Weight of optional brake	m_{brake}	kg	0,6	1,4	3	4,5
Electrical Data						
Motor type	–	–	Servo	Servo	Servo	Servo
Nominal voltage	U	V DC	600	600	600	600
Nominal current	I	A	3,9	7,6	5,7	18
Peak current	I_{peak}	A	5,4	10,8	21,5	31
Nominal power	P	kW	1,4	2,5	3,75	8,2
Environment & Standards						
Ambient temperature	$T_{ambient}$	°C	–20…+50	–20…+50	–20…+50	–20…+50
Max. humidity	ϕ	%	95	95	95	95
Degree of protection	IP	–	54S	54S	54S	54S

[1)] Preferred stroke range:
from 50 to 1 000 mm stroke is by 50 mm step (50, 100, 150, …, 900, 950, 1 000)
from 1 000 to 2 000 mm stroke is by 100 mm step (1 100, 1 200, …, 1 900, 2 000)
For all other strokes, out of the preferred range, consider an additional 1 week on standard leadtime. Please contact Ewellix.

Performance diagram

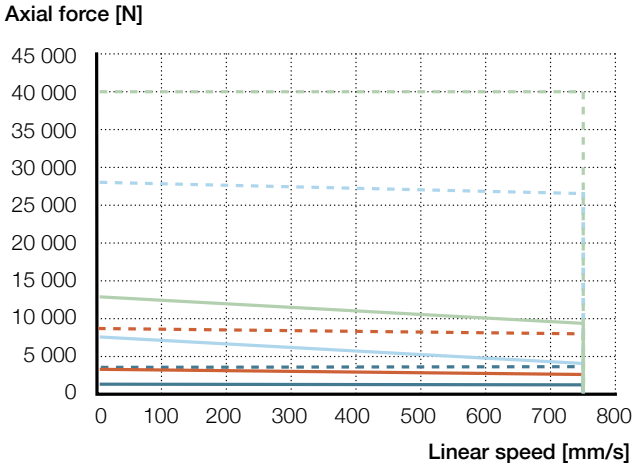

1FK7044	F_{cont}	F_{peak}
1FK7064	F_{cont}	F_{peak}
1FK7086	F_{cont}	F_{peak}
1FK7105	F_{cont}	F_{peak}

Dimensional drawing

See **page 158**

Ordering key

See **page 162**

CASM-100-RA

Electric cylinder servo motor, inline configuration

Technical data

Designation	Symbol	Unit	1FK7044	1FK7064	1FK7086	1FK7105
Performance Data						
Continuous force @ zero speed	F_{c0}	kN	2,3	6,0	14,1	24,1
Continuous force @ max. speed	F_c	kN	1,5	4,0	3,5	13,1
Peak force @ zero speed	F_{p0}	kN	6,5	16,1	52,8	75,5
Peak force @ max. speed	F_p	kN	6,3	11,6	39,2	75
Dynamic load capacity	C	kN	106,0	106,0	106	106,0
Holding force (motorbrake option)	F_{Hold}	kN	3,7	9,6	17	31
Max. linear speed	v_{max}	mm/s	750	500	500	500
Max. acceleration	a_{max}	m/s^2	12	12	12	12
Duty cycle	D	%	100	100	100	100
Mechanical Data						
Screw type	–	–	Roller screw	Roller screw	Roller screw	Roller screw
Screw diameter	d_{screw}	mm	30	30	30	30
Screw lead	p_{screw}	mm	10	10	10	10
Lead accuracy	–	–	G5	G5	G5	G5
Stroke[1) 2)]	s	mm	100…2 000	100…2 000	100…2 000	100…2 000
Internal overstroke each side	s0	mm	2	2	2	2
Backlash	$s_{backlash}$	mm	0,2	0,2	0,2	0,2
Gear reduction	i	–	1	1	1	1
Efficiency	η	%	73	74	74	75
Inertia @ 0 mm stroke	J	10^{-4} kgm^2	6,56	12,8	27,3	159
Δ Inertia per 100 mm	ΔJ	10^{-4} kgm^2	0,63	0,63	0,63	0,63
Inertia of optional brake	J_{brake}	10^{-4} kgm^2	0,36	1	3,5	8
Weight @ 0 mm stroke	m	kg	21,3	30,2	39,3	57,9
Δ weight per 100 mm	Δm	kg	2,4	2,4	2,4	2,4
Weight of optional brake	m_{brake}	kg	0,6	1,4	3,0	4,5
Electrical Data						
Motor type	–	–	Servo	Servo	Servo	Servo
Nominal voltage	U	V DC	600	600	600	600
Nominal current	I	A	3,9	7,6	5,7	18
Peak current	I_{peak}	A	5,4	10,8	21,5	31
Nominal power	P	kW	1,4	2,5	3,75	8,2
Environment & Standards						
Ambient temperature	$T_{ambient}$	°C	–10…+50	–10…+50	–10…+50	–10…+50
Max. humidity	ϕ	%	95	95	95	95
Degree of protection	IP	–	54S	54S	54S	54S

[1)] Preferred stroke range:
from 50 to 1 000 mm stroke is by 50 mm step (50, 100, 150, …, 900, 950, 1 000)
For all other strokes, out of the preferred range, consider an additional 1 week on standard leadtime. Please contact Ewellix.
[2)] For stroke > 1 000 mm one CASM-100-RA, please contact Ewellix

Performance diagram

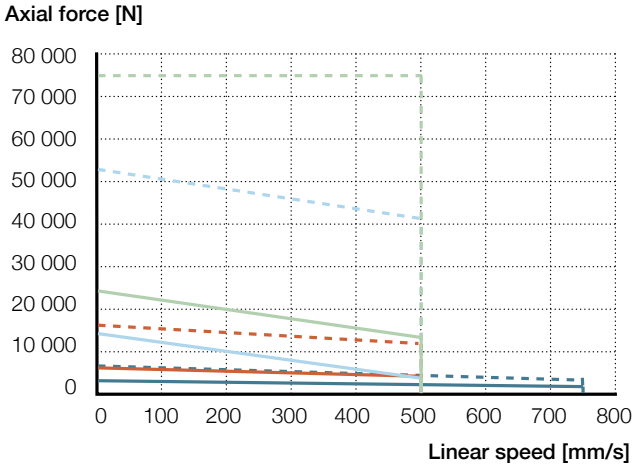

1FK7044	F_{cont}	F_{peak}
1FK7064	F_{cont}	F_{peak}
1FK7086	F_{cont}	F_{peak}
1FK7105	F_{cont}	F_{peak}

3

Dimensional drawing

See **page 158**

Ordering key

See **page 162**

Dimensional drawing

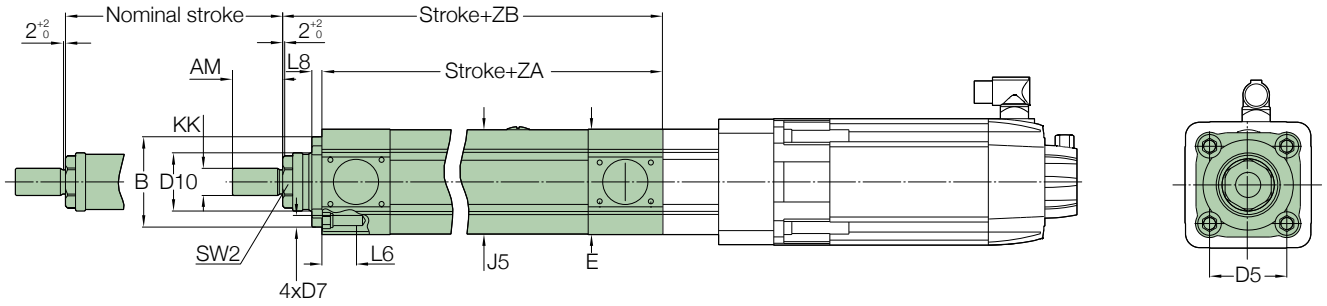

Linear Unit	KK	SW 2	D7	J5	E	ZA	ZB	L8	B		D10	AM	D5	L6
–	–	–	–	mm										
CASM-100-xx-xxxx-A…	M27 × 2	AF 46	M12	☐ 104	☐ 105	287±1,5	326±2	10	Ø90	-0,10 -0,35	Ø58	50	☐ 77	34,5

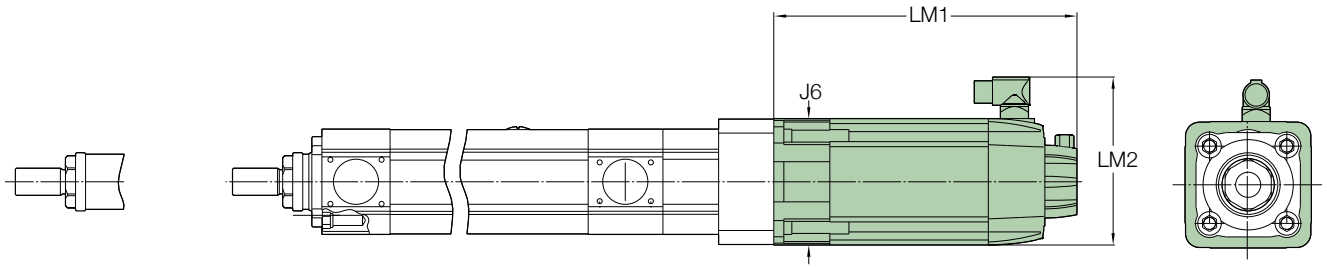

Motor	LM1	LM2	J6
–	mm		
CAM-MS-xO-A11-000	242,5	139,5	☐ 96
CAM-MS-xO-A12-000	302,5	167,5	☐ 126
CAM-MS-xO-A13-000	309,5	216,5	☐ 155
CAM-MS-xO-A14-000	340	253	☐ 192

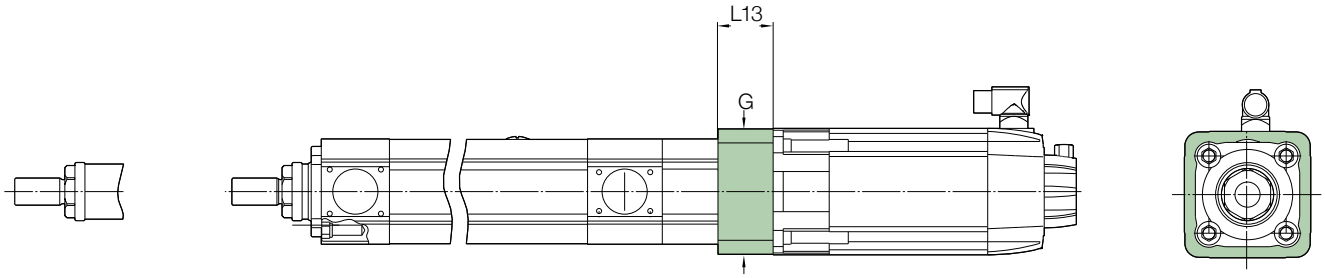

Motor adapter	G	L13
–	mm	
CAM-MS-xO-A11-000	☐ 105	44,5
CAM-MS-xO-A12-000	☐ 125	54,5
CAM-MS-xO-A13-000	☐ 139	62,5
CAM-MS-xO-A14-000	☐ 192,5	85,5

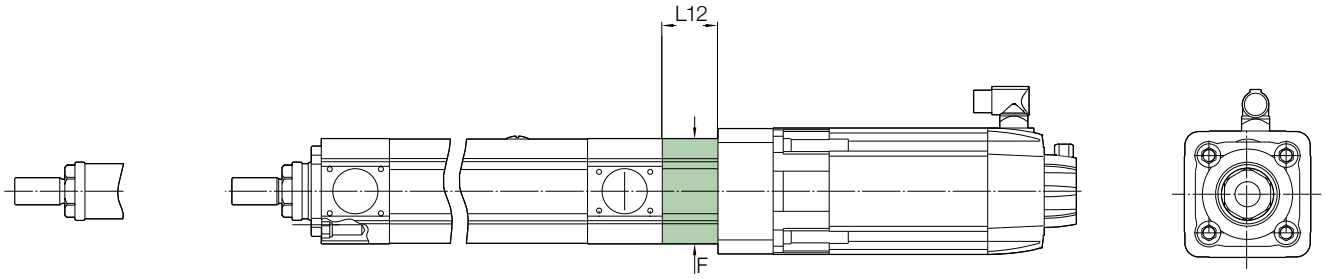

Gearbox	i	F	L12
–	–	mm	
CAM-GI-AAA-00-000	01:01	☐ 105	55,5

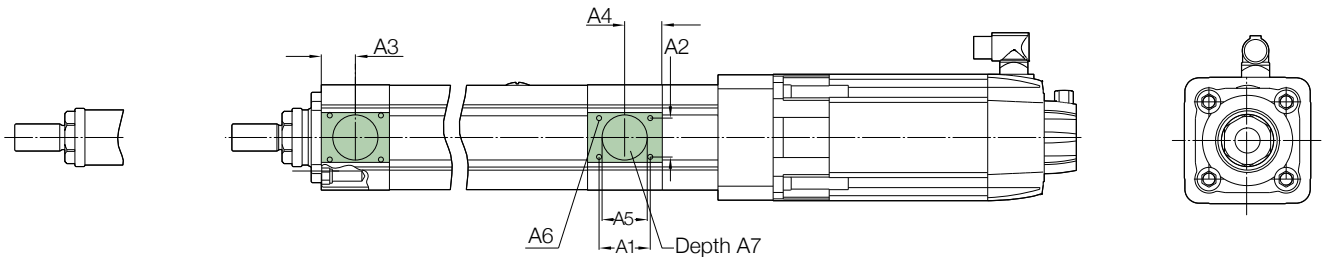

Optional Mounting Possibility	A6	A1	A2	A3	A4	A5	A7
–	–	mm					
CASM-100-xx-xxxx-…	M8 × 10	52,6	41,6	34	37	Ø48 H7	7,4

Mounting positions

For a complete actuator assembly, the gearbox is used as the 0° reference for all connected modules (↳ **fig. 6**).

Fig. 6

Gearbox reference

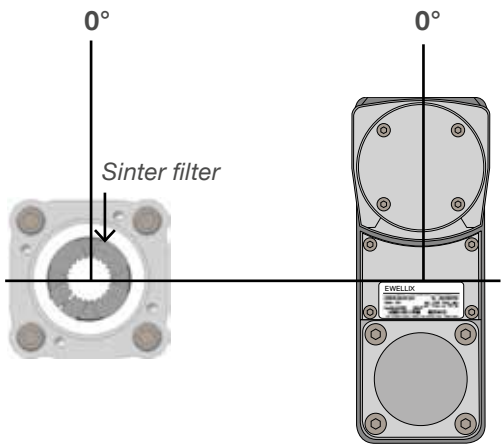

Mounting position protection tube

The 0° reference for the protection tube is the sinter filter position. The protection tube can be turned in 90° steps clockwise (↳ **fig. 7**). Parallel gearbox mounting positions have some limitations: protection with relubrication port can be mounted at
90° - 180° - 270° (0° is not possible) (↳ **fig. 8**).

Fig. 7

Linear unit reference

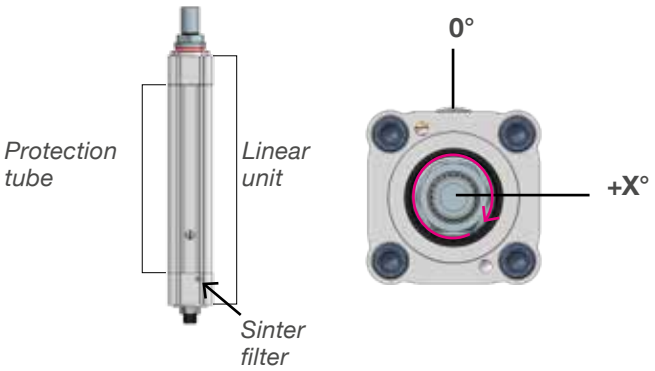

Orientation recommendation

For parallel version, recommended linear unit mounting position is 0° and protection tube mounting position is 90° (270° also possible).

Fig. 8

Linear unit orientation

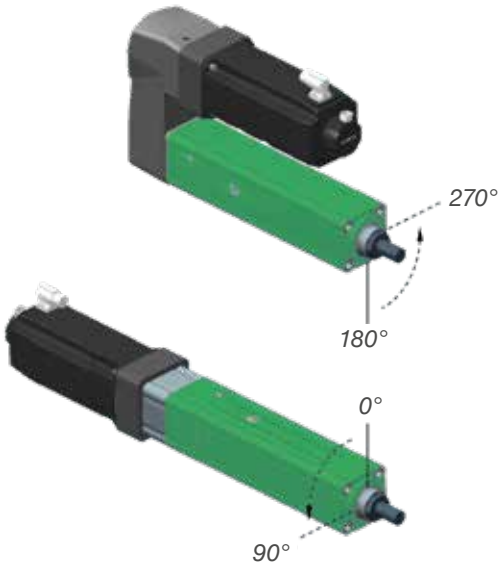

Mounting positions motor

The 0° reference for the motor is the electric connector outlet position. The motor can be turned in 90° steps clockwise (↳ **fig. 9**). Parallel gearbox mounting position have some limitations: Motor from sizes Servo 8x / IEC AC 80 and bigger can be mounted at 0° - 90° - 270° (180° is not possible) (↳ **fig. 10**).

Fig. 9

Reference motor adapter

Fig. 10

Motor adapter orientation

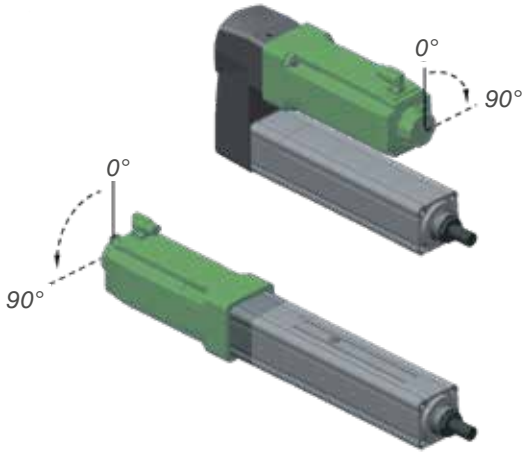

Ordering key

Complete actuator

C A S M - 1 0 0 - □ □ - 0 1 0 0 - A □ □ □ □ □ □ - □ □ □ □ 0 0 -

Size

Screw type

BA	Ball screw 32 × 10
BB	Ball screw 40 × 10
BC	Ball screw 40 × 20
RA	Roller screw 30 × 10

Stroke

–	Stroke in mm

Push tube

A	E355 chrome plated, Ø55

Front housing and attachments

A	Aluminum, no mounting option
B	Aluminium, with body attachment

Front housing attachment

0	None
A	Front plate 90° mounting position
B	Front plate 0° mounting position
C	Pivot attachment (trunnion brackets to be ordered separately)
D	Foot mount, 0° mounting position
E	Foot mount, 180° mounting position

Rear housing

A1	Aluminum, no mounting option, reduced static load, for screw type BA[1]
B1	Aluminum, prepared for pivot or foot mounting, reduced static load, for screw type BA[1]
C1	Aluminum, no mounting option, for all screw types
D1	Aluminum, prepared for pivot or foot mounting, for all screw types

Rear housing attachment

0	None
C	Pivot attachment (trunnion brackets to be ordered separately)
D	Foot mount, 0° mounting position
E	Foot mount, 180° mounting position

Protection tube

A	Aluminium, 90°, recommended for parallel
B	Aluminium, 180°
C	Aluminium, 270°
D	Aluminium, 0°, recommended for inline

Sealing

B	IP54S
C	IP65 with sinter filter
D	IP65 with hose

Lubrication

A	Standard Lubrication for ball screws
B	Standard Lubrication for roller screws

Relubrication

0	No relubrication possibility
1	With relubrication possibility

Anti-rotation

0	No anti-rotation
1	With anti-rotation

Free parameter

00	Empty

[1] Maximum static axial force limited to 31 kN

- G ☐ - ☐☐☐ - ☐☐ - M ☐ - ☐☐ - ☐☐☐ -

Type

I	Inline
S	Spur

Gear size

A	Small Inline Servo motors
B	Small Inline Asynchronous motors
C	Small Parallel Spur Gear

Ratio

A	1 : 1 (only for inline)
B	4 : 1 (↳ **page 138** for exact ratio)
C	10 : 1 (↳ **page 138** for exact ratio)
D	25 : 1 (↳ **page 138** for exact ratio)

Options

A	Aluminum housing, standard lubrication for spur gearbox / no lubrication for inline gearbox

Rear attachment

0	No
B	Rear 0°
C	Rear 90°

Free parameter

0	Empty

Type

A	Interface according to IEC AC XX B14A
S	Interface according to table 1 (↳ **page 135**)

Delivery

Motor supplied and mounted by Ewellix (A11-A14 only)

B0-A11	Siemens 1FK7044-4CH71-1UH0
B0-A12	Siemens 1FK7064-4CF71-1RB0
B0-A13	Siemens 1FK7086-4CF71-1RB0
B0-A14	Siemens 1FK7105-2AF71-1RB0
B0-A61	Siemens 1LE1001-0CA32-2KB4-Z=F01+F11+G11
B0-A62	Siemens 1LE1001-0CB32-2KB4-Z=F01+F11+G11
B0-A63	Siemens 1LE1003-0DA32-2KB4-Z=F01+F11+G11
B0-A64	Siemens 1LE1003-0DB32-2KB4-Z=F01+F11+G11
B0-A65	Siemens 1LE1003-0EA02-2KB4-Z=F01+F11+G11
B0-A66	Siemens 1LE1003-0EB02-2KB4-Z=F01+F11+G11
B0-A67	Siemens 1LE1003-1AA42-2KB4-Z=F01+F11+G11
B0-A68	Siemens 1LE1003-1AB42-2KB4-Z=F01+F11+G11

Motor adapter only

00-AA1	Siemens 1FK7044 series
00-AA2	Siemens 1FK7064 series
00-AA3	Siemens 1FK7086 series
00-AA4	Siemens 1FK7105 series
00-AC1	IEC AC 71 B14A
00-AC2	IEC AC 80 B14A
00-AC3	IEC AC 90 B14A
00-AC4	IEC AC 100 B14A
00-XXX	Customized flanges, dimension see table on **page 135**

- [ ][ ] - [0][0][0]

Mounting position linear unit

A	0°, recommended for parallel (standard if no gearbox is selected)
B	90°
C	180°
D	270°

Mounting position motor

0	no motor kit selected
A	0°
B	90°
C	180° (Inline Gearbox only)
D	270°

Customer option

000	No option

Mounting position front plate and foot mount

The 0° reference for the linear unit is the sinter filter position. The front plate can be turned in 90° steps clockwise. The foot mount can be turned in 180° steps clockwise.

Fig. 5

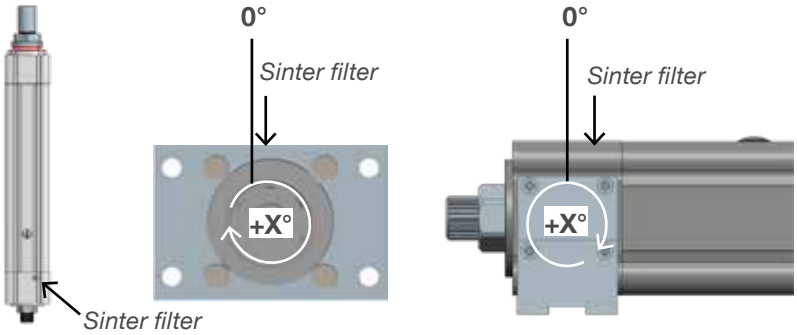

Accessories

CASM-100

Push tube attachments
Rod End

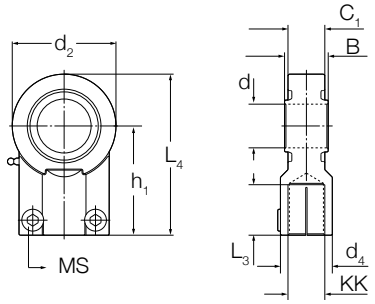

Technical info
Dynamic load rating: C=65,6 kN

Static load rating: C=100 kN

Ordering key
Rod End Ø32: ZBE-377900 (According to DIN8132 standard)

Type	KK	MS	L_3	B	C_1	d	d_4	L_4	h_1	d_2	m_2
–	–	–	mm								kg
ZBE-377900	M27 × 2	M10	37	32	29	Ø32	Ø40	116,5	80	76	1,1

Rod Clevis

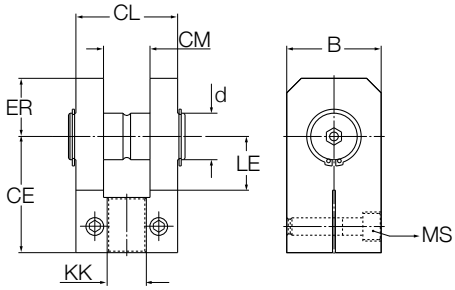

Technical info
Nominal force: 50 kN

Ordering key
Rod Clevis Ø32: ZBE-377917 (According to DIN8132 standard)

Type	KK	MS	CL	CM	LE	CE	ER	d	B	m
–	–		mm							kg
ZBE-377917	M27 × 2	M12	70	32	42	80	40	Ø32	65	2,7

Trunnion Bracket Centric

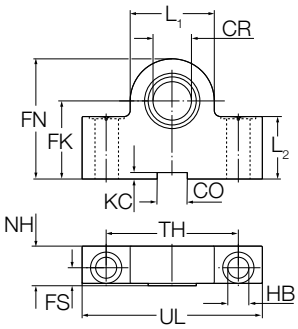

Technical info
Nominal force: 50 kN

Ordering key
Trunnion Bracket Centric Ø32: ZBE-377902 (According to DIN8132 standard)

Type	CR	FN	FK	HB	NH	TH	UL	CO	KC	FS	L_1	L_2	m
–	mm												kg
ZBE-377902	Ø32	100	65	Ø17,5	33	110	150	25	5,4	15	70	52	4,4

Trunnion Bracket Eccentric

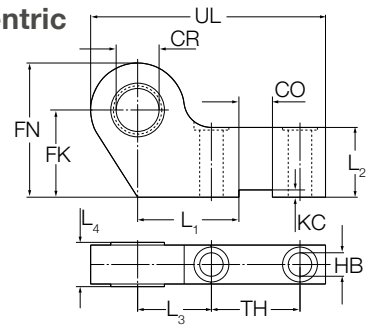

Technical info
Nominal force:
50 kN

Ordering key
ZBE-377910

Type	CR	FN	FK	TH	HB	L_3	UL	CO	KC	L_4	L_2	L_1	m
–	mm												kg
ZBE-377910	Ø32	100	65	66	Ø17,5	55	175	25	5,4	33	52	75,5	4,2

Proximity Switch

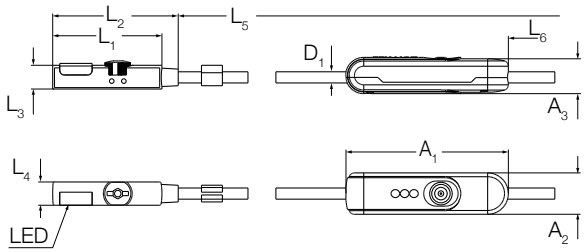

Ordering key
ZSC-377925

Type	L_1	L_2	L_3	L_4	L_5	D_1	A_1	A_2	A_3	L_6	m
–	mm										kg
ZSC-377925	23,5	27	5,1	5	2 000	Ø2,4	35	8,9	7,5	1 765	0,016

Please refer to Balluff datasheet BMF 235K H-PO-C-A2-PU-02 for detailed technical information.

Electric cylinders LEMC

Features

- High performance roller screw
- Steel push tube and aluminium protection tube
- Modular concept
- Possible to relubricate the roller screw nut with direct access
- Servo motors, asynchronous motors and customized motor adapters

Benefits

- High load and lifetime capacity, as well as high acceleration and speed capabilities
- High stiffness and robustness
- Multiple combinations allow for use in wide range of applications
- Low maintenance requirements
- Optimal solution for a wide variety of applications, either with Ewellix-provided motors or with the motor of your choice

Product description

For generations, hydraulic cylinders were often the first choice for large forces or to move heavy loads. Today, hydraulic systems have a powerful rival in the linear motion world – the electric cylinder.

In many applications, electromechanical systems provide a host of advantages over their hydraulic counterparts. They are smaller and lighter, and since the motor powering the actuator is connected directly, electromechanical systems do away with bulky pumps, accumulators, oil tanks and pipework. The absence of pressurised oil has safety and environmental benefits too, minimizing the risk of fire, pollution or injury associated with leaks and spills.

LEMC electric cylinders replace hydraulic systems with a precision roller screw, driven by a locally mounted electric motor and gearbox.

This technology results in an actuator with a higher power density than conventional designs. LEMC actuators use a modular design that can be configured for many different applications and a range of motor types.

In addition to conventional servo motors, they can be supplied with an integrated gearbox and smart asynchronous motor. This provides additional safety and machine protection capabilities, with integrated soft start and motor protection functions. As a further benefit for operations and maintenance staff, the controller incorporates near field communication (NFC) capabilities, allowing it to be adjusted wirelessly using a smartphone.

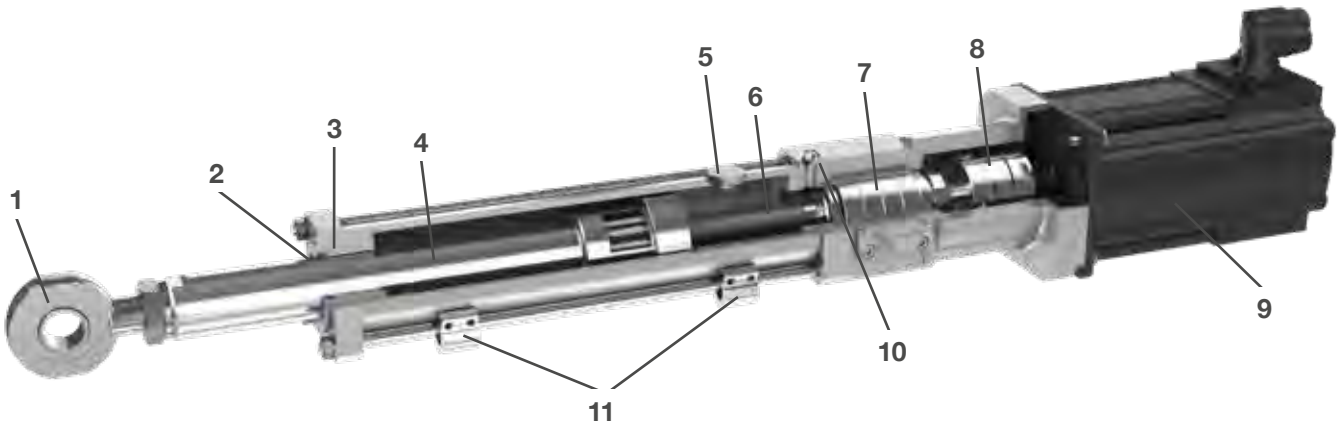

1. Rod end
2. Scraper to keep out contaminants
3. Guiding bushing
4. Steel push tube and aluminium protection tube
5. Re-lubrication access
6. High quality Ewellix planetary roller screw for highest axial loads with low play and high efficiency
7. High quality SKF bearings
8. Coupling
9. Servo motor or Asynchronous motor
10. Sinter filter for high airflow
11. Adjustable Home and limit switches

Performance overview of linear units

Linear unit –	F_{max} kN	F_{0max}	V_{max} mm
LEMC-U-2105	40	40	500
LEMC-U-2110	40	40	1 000
LEMC-U-3005	80	80	440
LEMC-U-3010	80	80	880

Performance overview of actuators

Linear unit –	Interface and gear ratio –	Motor –	F_{c0} kN	F_{p0}	V_{max} mm/s
LEMC-S-2105	L10/P10	LA1	6,1/6	17,3/16,8	163
LEMC-S-2105	L10/P10	LA2	6,1/6	17,3/16,8	338
LEMC-S-2105	L10/P10	LA3	10,9/10,6	27,8/27	125
LEMC-S-2105	L10/P10	LA4	10,9/10,6	27,8/27	294
LEMC-S-2105	P15	LA9	13,5	29,3	194
LEMC-S-2105	L10	LA5	14,4	33,5	163
LEMC-S-2105	L10/P10	LA6	14,4/14	31/30,1	338
LEMC-S-2110	L10/P10	LA1	3/2,9	8,5/8,3	325
LEMC-S-2110	L10/P10	LA2	3/2,9	8,5/8,3	675
LEMC-S-2110	L10/P10/P20	LA3	5,4/5,2/10,5	13,7/13,3/26,7	250/250/125
LEMC-S-2110	L10/P10/P20	LA4	5,4/5,2/10,5	13,7/13,3/26,7	588/588/294
LEMC-S-2110	L10	LA7	7,1	26,5	325
LEMC-S-2110	L10	LA8	7,1	26,1	675
LEMC-S-3005	L10/P10	LA3	10,5/10,2	26,6/25,8	125
LEMC-S-3005	L10/P10	LA4	10,5/10,2	26,6/25,8	294
LEMC-S-3005	L10	LB1	19,3	50,5	125
LEMC-S-3005	L10	LB2	19,3	50,5	269
LEMC-S-3005	P15	LA5	20	46,6	108
LEMC-S-3005	P15	LA6	20	43,1	225
LEMC-S-3005	L10/P10	LB5	34/32,9	69/67	113
LEMC-S-3005	L10/P10	LB6	32,9/31,9	54,9/53,3	269
LEMC-S-3010	L10	LA3	5,6	14,4	250
LEMC-S-3010	L10	LA4	5,6	14,4	588
LEMC-S-3010	L10	LB1	10,4	27,2	250
LEMC-S-3010	L10	LB2	10,4	27,2	538
LEMC-S-3010	L10	LB7	18,3	52,0	225
LEMC-S-3010	L10	LB8	18,3	52,0	538
LEMC-S-3010	P20	LA1	6,2	17,3	163
LEMC-S-3010	P20	LA2	6,2	17,3	338
LEMC-S-3010	P20	LA5	14,4	33,5	163
LEMC-S-3010	P20	LA6	14,4	31	338
LEMC-S-3010	P15	LB5	26,7	54,2	150
LEMC-S-3010	P15	LC2	26,7	49,6	358

Motors and gearboxes

Servo motors

The LEMC can be ordered with a servo motor. In this case, Ewellix has selected a series of Lenze motors and drives that best matches the performance of the actuator to the end-user application. To complete the design, several options can be selected such as absolute encoder (EnDat, Hyperface), safety brake or associated servodrive. It is also possible to equip the LEMC with your preferred brand of servo motor so that it integrates best into your system. Please contact Ewellix to check the feasibility of your configuration.

For more information please visit the following sites:
Motors:
http://www.lenze.com/en-us/products/motors/
Drives:
http://www.lenze.com/en-us/products/inverters/

Drive options

The performance attributes shown in the table on the previous page are the result of specific Lenze servo motor and drive combinations. The LEMC can be offered with or without the servodrive. The servo-
drive can be in the recommended configuration or any other configuration that fits your installation.

In the case of a different combination, please contact Ewellix to determine what effect the different configuration will have on the performance of the actuator.

Motor technical data

Motor	Lenze servo motor	Lenze 9400 Highline servoamplifier
LA1	MCS12D20	E94ASHE0044
LA2	MCS12D41	E94ASHE0134
LA3	MCS12H15	E94ASHE0074
LA4	MCS12H35	E94ASHE0134
LA5	MCS12L20	E94ASHE0074
LA6	MCS12L41	E94ASHE0134
LA7	MCS12L20	E94ASHE0134
LA8	MCS12L41	E94ASHE0324
LA9	MCS12H35	E94ASHE0074
LB1	MCS14H15	E94ASHE0134
LB2	MCS14H32	E94ASHE0324
LB5	MCS14P14	E94ASHE0134
LB6	MCS14P32	E94ASHE0244
LB7	MCS14P14	E94ASHE0244
LB8	MCS14P32	E94ASHE0474
LC2	MCS14P32	E94ASHE0324

Asynchronous motors

The LEMC with asynchronous motor is the combination of an LEMC linear unit, a gearbox and a Lenze smart asynchronous motor. The gearboxes are available with several ratios to either favor speed or load for any linear unit size. They are available packaged in parallel and right angle configurations. The gearboxes are oil lubricated. When ordering a LEMC with asynchronous motor, the proper configuration must be identified so that the drains and vents are located correctly.

Smart functions

The asynchronous Lenze motor is equipped with a smart control box with the following features:

- Rotating speed can be adjusted freely between 500 and 2 600 r/min
- 3 digital inputs for changing speed and direction of movement
- 1 digital output for status message
- Integrated ramps for soft start and stop functions, to protect the system mechanics and full motor protection
- Less wiring thanks to electronic contactor and motor protection function
- Excellent energy efficiency
- Can be operated with an NFC-capable smartphone

Performance overview of actuators with asynchronous motors

Linear unit	Interface and gear ratio	Motor	F_{c0}	V_{min}	V_{max}
LEMC-A-2110	B054/ B151	LAA2	4,3/12	15,5/ 5,5	80,2/28,7
LEMC-A-2110	B319/ P129	LBA2	25,4/10,3	2,7/ 6,5	13,5/ 33,3
LEMC-A-2110	P187/ P328	LBA2	14,9/ 26,2	4,5/ 2,5	23/13,2
LEMC-A-3005	B051/ B155	LBA2	ago-24	8/ 2,7	41,7/13,9
LEMC-A-3005	B319/ P129	LBA2	49,2/20	1,3/ 3,2	6,7/16,7
LEMC-A-3005	P187/ P328	LBA2	29/ 50,7	2,2/ 1,2	11,5/6,6

Standard motor and gearbox types

Interface, gear ratio and motor	Lenze gearbox	Gearbox ratio	Lenze Smart motor
P129LBA2SN	G500-S220	12,992	M300-063-42
P187LBA2SN	G500-S220	18,776	M300-063-42
P328LBA2SN	G500-S220	32,867	M300-063-42
B054LAA2SN	G500-B45	5,411	M300-063-42
B151LAA2SN	G500-B45	15,111	M300-063-42
B319LBA2SN	G500-B110	31,919	M300-063-42
B051LBA2SN	G500-B110	5,185	M300-063-42
B155LBA2SN	G500-B110	15,556	M300-063-42

EWELLIX

Standard Motor interface

Layout	**Inline**		**Parallel**					
LEMC size	21	30	21			30		
Ratio	1:1	1:1	1:1	3:2	2:1	1:1	3:2	2:1
Lenze								
MCS12	L1019110L	L1019110L	P1019110L	P1519110L	P2019110L	P1019110L	P1519110L	P2019110L
	–	–	–	–	–	–	–	P2019110H
MCS14	–	L1024130L	–	–	–	P1024130L	–	–
	–	–	–	–	–	P1024130H	P1524130H	P2024130H
Siemens								
1FK706x	L1024110L	L1024110L	P1024110L	P1524110L	P2024110L	P1024110L	P1524110L	P2024110L
	–	–	–	–	–	–	–	P2024110H
1FK708x	–	L1032130L	–	–	–	P1032130L	–	–
	–	–	–	–	–	P1032130H	P1532130H	P2032130H
Parker								
NX6	L1024110L	L1024110L	P1024110L	P1524110L	P2024110L	P1024110L	P1524110L	P2024110L
	–	–	–	–	–	–	–	P2024110H
NX8	–	L1032130L	–	–	–	P1032130L	–	–
	–	–	–	–	–	P1032130H	P1532130H	P2032130H
Kollmorgen								
AKM5x	L1019110L	L1019110L	P1019110L	P1519110L	P2019110L	P1019110L	P1519110L	P2019110L
	–	–	–	–	–	–	–	P2019110H
	L1024110L	L1024110L	P1024110L	P1524110L	P2024110L	P1024110L	P1524110L	P2024110L
	–	–	–	–	–	–	–	P2024110H
AKM6x	–	L1024130L	–	–	–	P1024130L	–	–
	–	–	–	–	–	P1024130H	P1524130H	P2024130H
	–	L1032130L	–	–	–	P1032130L	–	–
	–	–	–	–	–	P1032130H	P1532130H	P2032130H
Rockwell / Allen Bradley								
MPL–A/B45x	L1024110L	L1024110L	P1024110L	P1524110L	P2024110L	P1024110L	P1524110L	P2024110L
	–	–	–	–	–	–	–	P2024110H
MPL–A/B52x	–	L1028130L	–	–	–	P1028130L	–	–
MPL–A/B52x & B54x & B56x	–	L1028130L	–	–	–	P1028130H	P1528130H	P2028130H

NOTE: For other motors, please contact Ewellix.

3

Third party motors

In order to attach your preferred motor to the linear unit, Ewellix offers tailor made solutions within the specifications below.

For motor specifications which are not covered by the specifications below, please contact Ewellix.

Inline interface

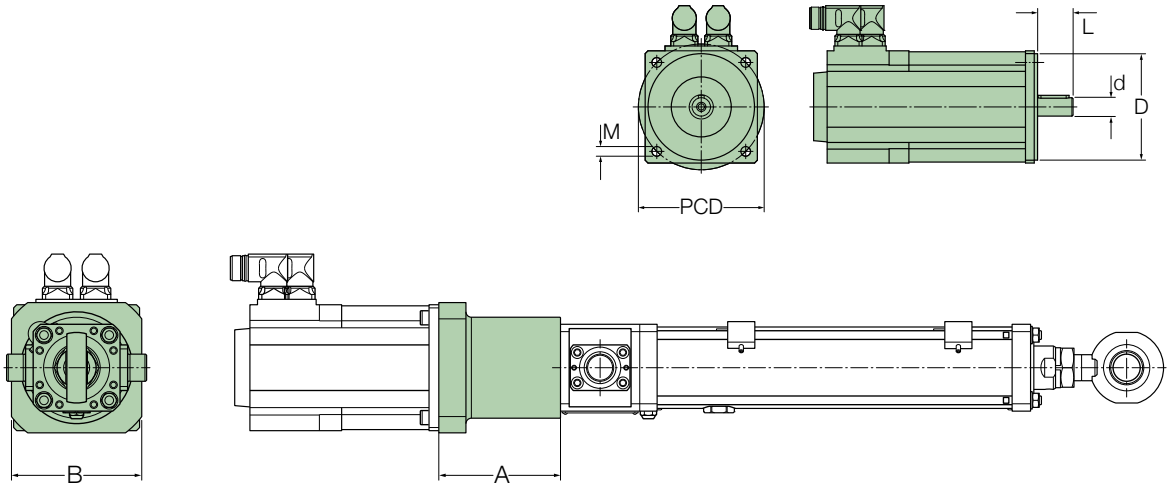

LEMC	Interface	d	D	L	PCD	M	A	B	Torque max	Inertia	Weight
–		mm				–	mm		Nm	10^{-4} kgm²	kg
21	L1019110L	19	110 H8 $^{-0}_{-0,054}$	40…50	130	M8	112	120	60	1,6	1,7
21	L1024110L	24	110 H8 $^{-0}_{-0,054}$	40…50	130	M8	112	120	60	1,6	1,7
30	L1019110L	19	110 H8 $^{-0}_{-0,054}$	40…50	130	M8	106	120	60	1,6	2,9
30	L1024110L	24	110 H8 $^{-0}_{-0,054}$	40…50	130	M8	106	120	60	1,6	2,9
30	L1024130L	24	130 H8 $^{-0}_{-0,063}$	50…58	165	M10	118	150	120	3	2,6
30	L1028130L	28	130 H8 $^{-0}_{-0,063}$	50…60	165	M10	121	150	120	3	2,6
30	L1032130L	32	130 H8 $^{-0}_{-0,063}$	50…58	165	M10	118	150	120	3	2,6

Parallel interface

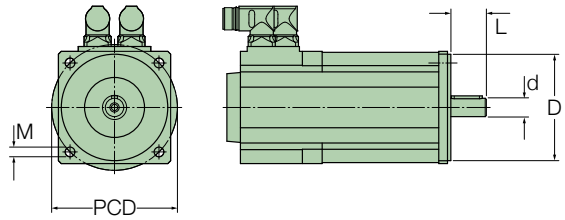

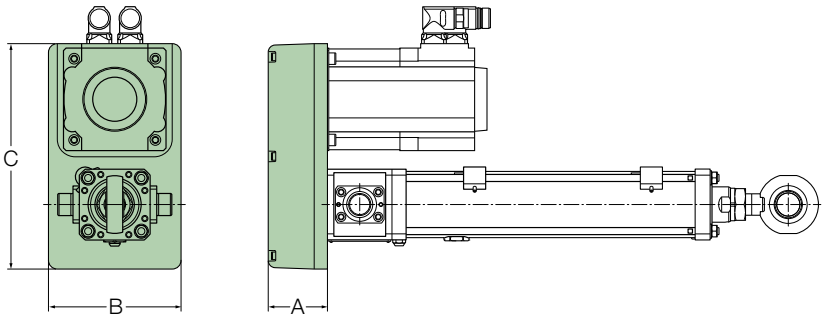

LEMC	Interface	d	D		L	PCD	M	A	B	C	Torque max	Inertia	Weight
–		mm					–	mm			Nm	10^{-4} kgm²	kg
21	P1019110L	19	110 G8	+0,012 +0,066	40…50	130	M8	67	150	255	40	14,4	3,5
21	P1024110L	24	110 G8	+0,012 +0,066	40…50	130	M8	67	150	255	40	14,4	3,5
21	P1519110L	19	110 G8	+0,012 +0,066	40…50	130	M8	67	150	255	25	7,55	3,4
21	P1524110L	24	110 G8	+0,012 +0,066	40…50	130	M8	67	150	255	25	7,55	3,4
21	P2019110L	19	110 G8	+0,012 +0,066	40…50	130	M8	67	150	255	20	9,55	4,3
21	P2024110L	24	110 G8	+0,012 +0,066	40…50	130	M8	67	150	255	20	9,55	4,3
30	P1019110L	19	110 G8	+0,012 +0,066	40…50	130	M8	72	180	325	55	37,6	5,8
30	P1024110L	24	110 G8	+0,012 +0,066	40…50	130	M8	72	180	325	55	37,6	5,8
30	P1024130L	24	130 G8	+0,014 +0,077	50…58	165	M10	72	180	325	55	37,6	5,6
30	P1024130H	24	130 G8	+0,014 +0,077	50…58	165	M10	72	180	325	90	37,6	5,6
30	P1028130L	28	130 G8	+0,014 +0,077	50…60	165	M10	72	180	325	55	37,6	5,6
30	P1028130H	28	130 G8	+0,014 +0,077	50…60	165	M10	72	180	325	90	37,6	5,6
30	P1032130L	32	130 G8	+0,014 +0,077	50…58	165	M10	72	180	325	55	37,6	5,6
30	P1032130H	32	130 G8	+0,014 +0,077	50…58	165	M10	72	180	325	90	37,6	5,6
30	P1519110L	19	110 G8	+0,012 +0,06	40…50	130	M8	72	180	325	40	27,5	6,3
30	P1524110L	24	110 G8	+0,012 +0,06	40…50	130	M8	72	180	325	40	27,5	6,3
30	P1524130H	24	110 G8	+0,012 +0,06	50…58	165	M10	72	180	325	100	70,3	9
30	P1528130H	28	130 G8	+0,014 +0,077	50…60	165	M10	72	180	325	100	70,3	9
30	P1532130H	32	130 G8	+0,014 +0,077	50…58	165	M10	72	180	325	100	70,3	9
30	P2019110L	19	110 G8	+0,012 +0,06	40…50	130	M8	72	180	325	35	25	7
30	P2019110H	19	110 G8	+0,012 +0,06	40…50	130	M8	72	180	325	70	34,5	8,5
30	P2024110L	24	110 G8	+0,012 +0,06	40…50	130	M8	72	180	325	35	25	7
30	P2024130H	24	130 G8	+0,014 +0,077	50…58	165	M10	72	180	325	70	34,5	8,3
30	P2028130H	28	130 G8	+0,014 +0,077	50…60	165	M10	72	180	325	70	34,5	8,3
30	P2032130H	32	130 G8	+0,014 +0,077	50…58	165	M10	72	180	325	70	34,5	8,3

Parallel gearbox

Parallel gearbox consists of one housing which fits on one side to the linear unit and on the other side to the motor adapter with the matching coupling. The coupling is already mounted on the input shaft of the gearbox and locked by a screw. The counterpart of the coupling is delivered with the motor adapter.

The parallel gearbox transmits the motor torque through three stage spur gear directly to the linear unit (max. output torque 300 Nm). Three gear ratios are available and it is maintenance free.

Technical data

Gearbox type Short designation	Unit	CAM-GS-CBA-XX	CAM-GS-CCA-XX	CAM-GS-CDA-XX
Type	–	Parallel	Parallel	Parallel
Gear reduction	–	3,89	9,82	24,95
Nominal output torque	Nm	100	100	100
Max. output torque	Nm	300	300	300
Max. input power	W	3 000	3 000	3 000
Max. input speed	r/min	4 500	4 500	4 500
Efficiency	%	85	85	85
Weight	kg	9	9	9
Length	mm	98,5	98,5	98,5

Manual override

The parallel gearbox has a manual override as built-in functionality. The gearbox can be manually operated through a hexagonal key located on the gearbox motor axis. As standard, the access to this key is covered by a plate (↳ **fig. 1**). On request, it's possible to have a round opening for direct access (↳ **fig. 2**) or to mount an electromagnetic brake (↳ **fig. 3**).

Fig. 1

Fig. 2

On request

Fig. 3

On request

Dimensional drawing

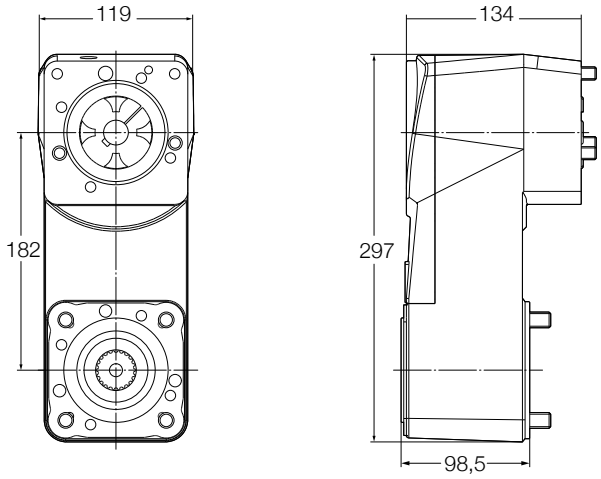

All dimensions in mm

Complete actuator

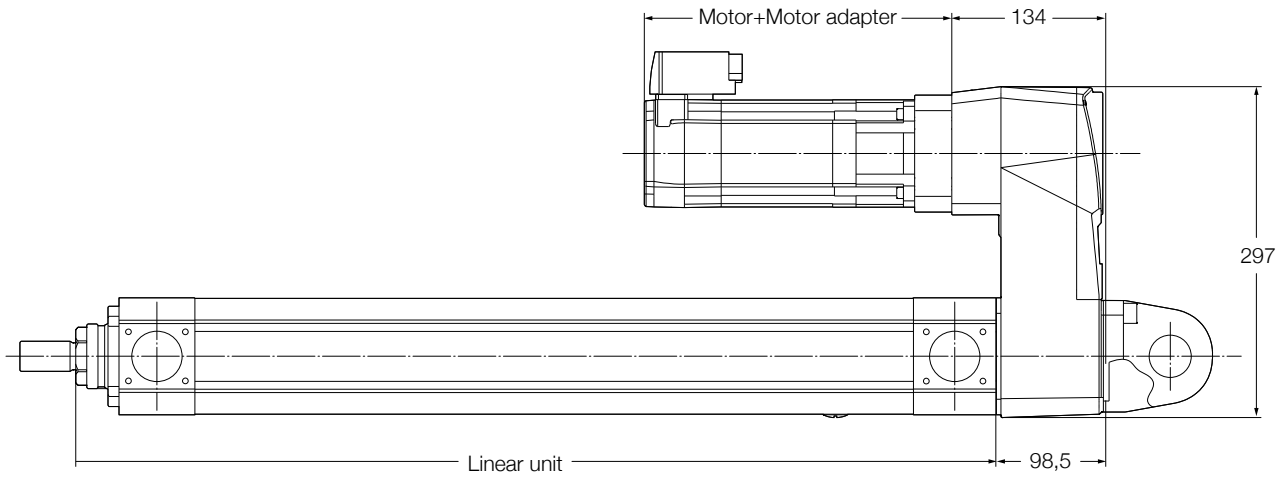

All dimensions in mm

Manuals

Supporting documents are available for downloading on ewellix.com

3D models

Product configurators for 3D models download are available on ewellix.com

Instruction for maintenance, limit switch and motor assembly

3D model configurator

LEMC-U-21

Linear unit

Technical data

Designation	Symbol	Unit	LEMC-U-2105	LEMC-U-2110
Performance Data				
Max. dynamic axial force	F_{max}	kN	40	40
Max. dynamic axial force L10[1]	F_{L10}	kN	25	25
Max. static axial force	F_{0max}	kN	40	40
Dynamic load capacity	C	kN	50,5	54,3
Maximum torque to reach Fmax	M_{max}	Nm	41,7	84,4
Max. linear speed	v_{max}	mm/s	500	1 000
Max. rotational speed	n_{max}	1/min	6 000	6 000
Max. acceleration	a_{max}	m/s^2	6	12
Duty cycle	D_{unit}	%	100	100
Mechanical Data				
Screw type	–	–	Roller screw	Roller screw
Screw diameter	d_{screw}	mm	21	21
Screw lead	p_{screw}	mm	5	10
Lead accuracy	–	–	G5	G5
Stroke[2]	s	mm	100…600	100…600
Internal overstroke each side	s_0	mm	5	5
Backlash	$s_{backlash}$	mm	0,02	0,04
Efficiency	η_{lu}	%	76	75
Inertia @ 0 mm stroke	J_{lu}	10^{-4} kgm^2	1,45	1,45
Δ Inertia per 100 mm stroke	ΔJ	10^{-4} kgm^2	0,15	0,15
Weight @ 0 mm stroke	m_{lu}	kg	7,3	7,3
Δ weight per 100 mm stroke	Δm	kg	1,2	1,2
Weight of anti-rotation	m_{arot0}	kg	0,9	0,9
Environment				
Ambient temperature	$T_{ambient}$	°C	0…+40	0…+40
Degree of protection	IP	–	54S	54S

[1] Maximum dynamic axial force usable to apply the theoretical lifetime calculation (L10)
[2] By 100 mm steps

Performance diagram

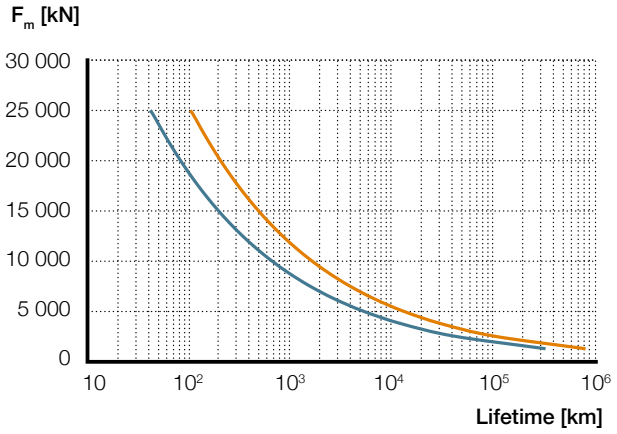

LEMC-x-2105

LEMC-x-2110

Ordering key

See **page 184**

Dimensional drawing

LEMC-U-21xx-xxxx-TNNx-NNN (Trunnions)

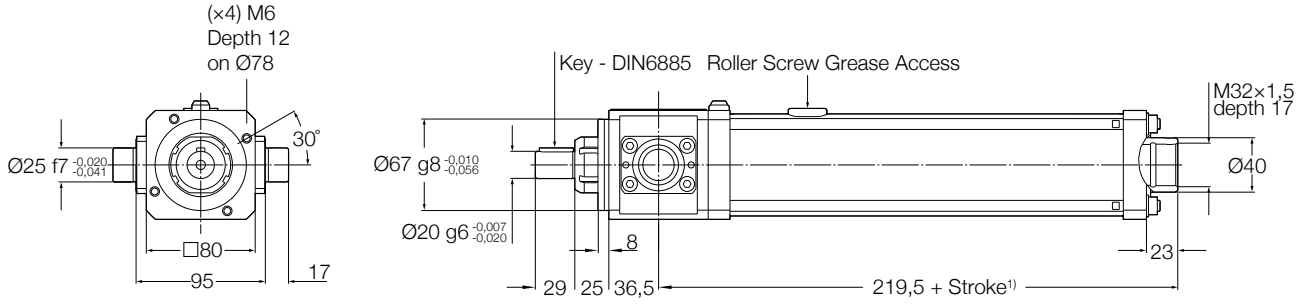

LEMC-U-21xx-xxxx-BNNx-NNN (Back plate)

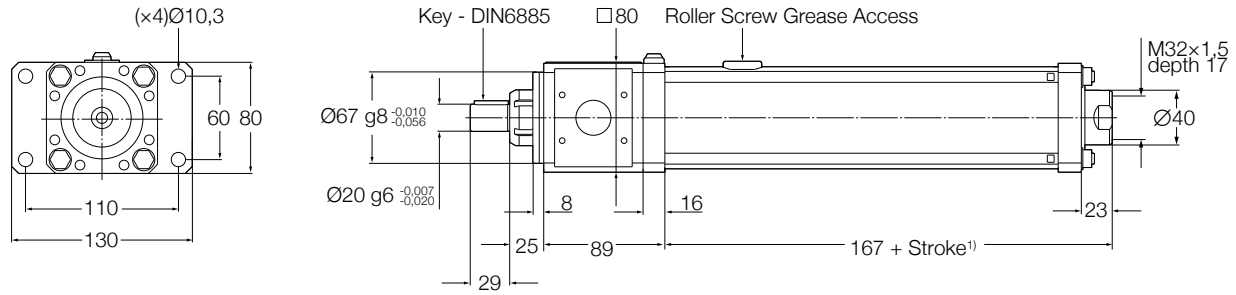

LEMC-U-21xx-xxxx-FNNx-NNN (Front plate)

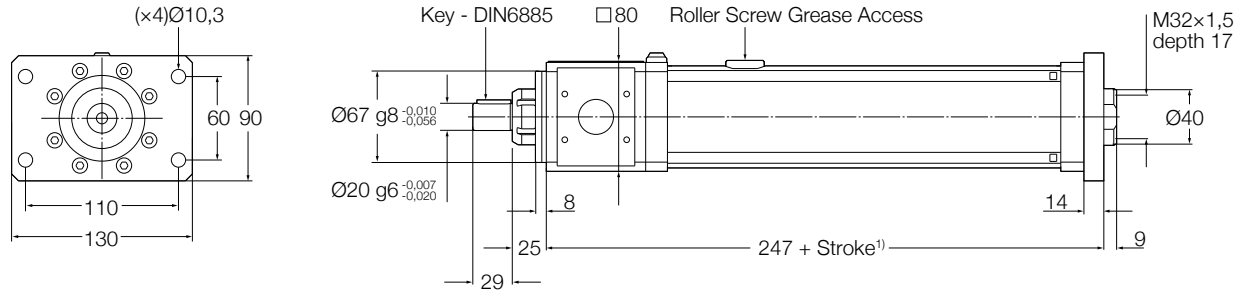

LEMC-U-21xx-xxxx-NNNx-NNN

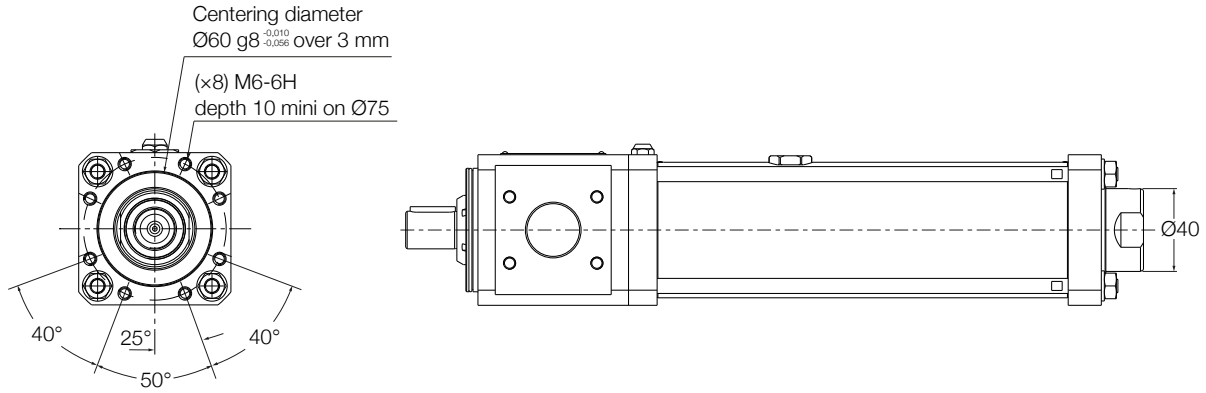

LEMC-U-21xx-xxxx-xRxx (Rod end)

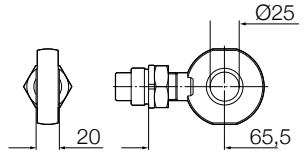

LEMC-U-21xx-xxxx-xMxx (Male attachement)

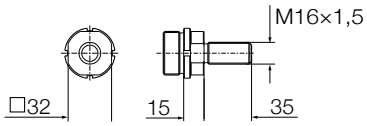

1) Add 30 mm for anti-rotation option

LEMC-U-30

Linear unit

Technical data

Designation	Symbol	Unit	LEMC-U-3005	LEMC-U-3010
Performance Data				
Max. dynamic axial force	F_{max}	kN	80	80
Max. dynamic axial force L10[1]	F_{L10}	kN	50	50
Max. static axial force	F_{0max}	kN	80	80
Dynamic load capacity	C	kN	106	122
Maximum torque to reach Fmax	M_{max}	Nm	87,1	161,5
Max. linear speed	v_{max}	mm/s	440	880
Max. rotational speed	n_{max}	1/min	5 280	5 280
Max. acceleration	a_{max}	m/s^2	6	12
Duty cycle	D_{unit}	%	100	100
Mechanical Data				
Screw type	–	–	Roller screw	Roller screw
Screw diameter	d_{screw}	mm	30	30
Screw lead	p_{screw}	mm	5	10
Lead accuracy	–	–	G5	G5
Stroke[2]	s	mm	100…800	100…800
Internal overstroke each side	s_0	mm	5	5
Backlash	$s_{backlash}$	mm	0,02	0,04
Efficiency	η_{lu}	%	73	79
Inertia @ 0 mm stroke	J_{lu}	10^{-4} kgm^2	5	5
Δ Inertia per 100 mm stroke	ΔJ	10^{-4} kgm^2	0,65	0,65
Weight @ 0 mm stroke	m_{lu}	kg	14,7	14,7
Δ weight per 100 mm stroke	Δm	kg	2,1	2,1
Weight of anti-rotation	m_{arot0}	kg	1,3	1,3
Environment				
Ambient temperature	$T_{ambient}$	°C	0…+40	0…+40
Degree of protection	IP	–	54S	54S

[1] Maximum dynamic axial force usable to apply the theoretical lifetime calculation (L10)
[2] By 100 mm steps

Performance diagram

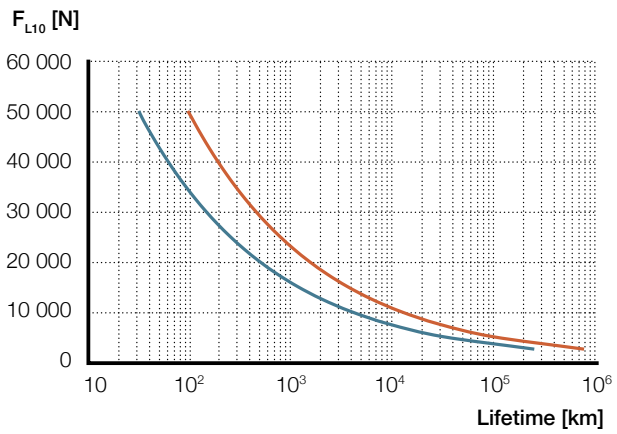

LEMC-x-3005

LEMC-x-3010

Ordering key

See **page 184**

Dimensional drawing

LEMC-U-30xx-xxxx-TNNx-NNN (Trunnions)

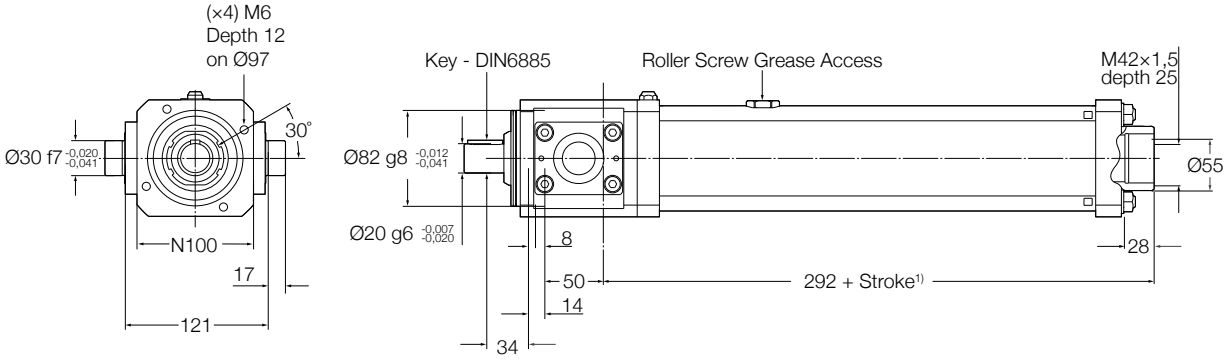

LEMC-U-30xx-xxxx-BNNx-NNN (Back plate)

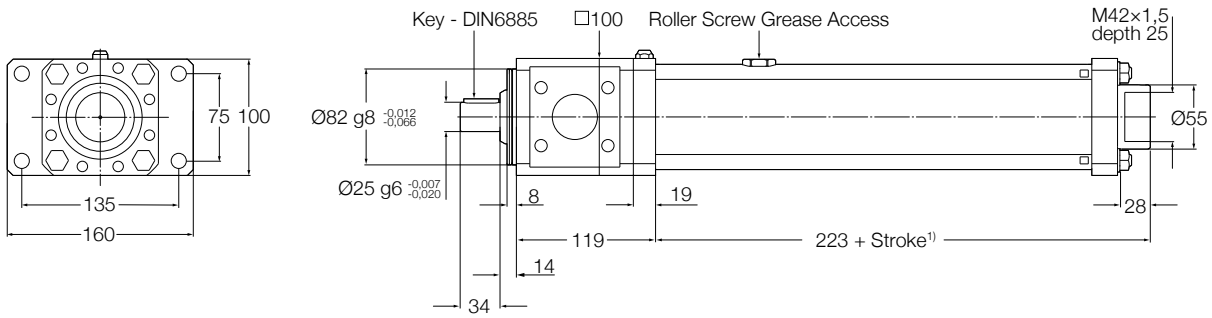

LEMC-U-30xx-xxxx-FNNx-NNN (Front plate)

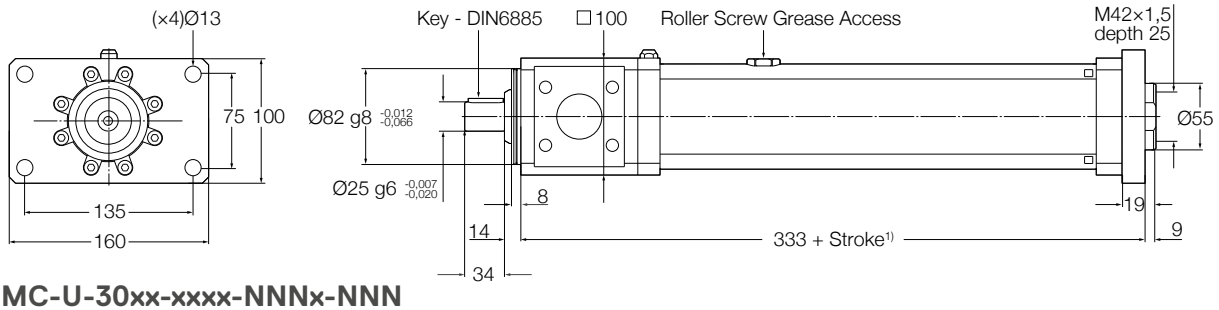

LEMC-U-30xx-xxxx-NNNx-NNN

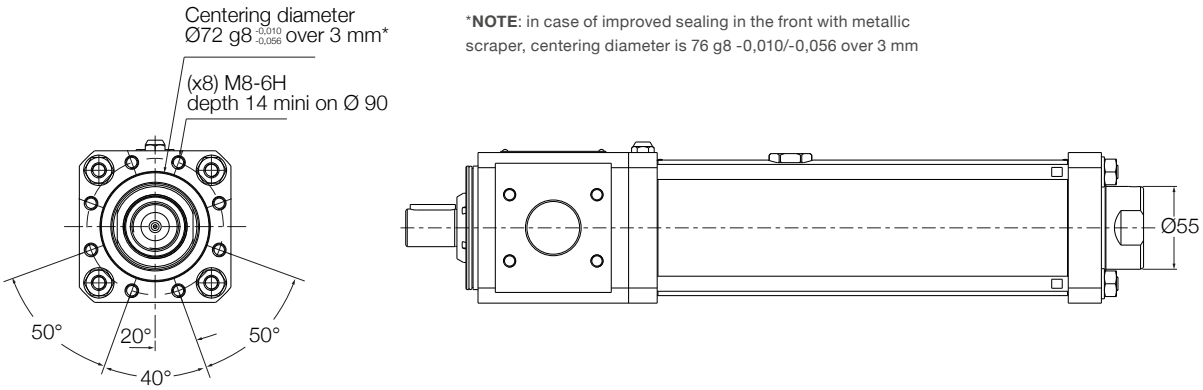

*NOTE: in case of improved sealing in the front with metallic scraper, centering diameter is 76 g8 -0,010/-0,056 over 3 mm

LEMC-U-30xx-xxxx-xRxx (Rod end)

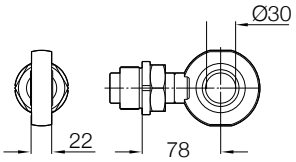

LEMC-U-30xx-xxxx-xMxx (Male attachement)

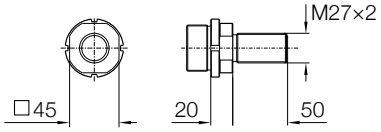

1) Add 30 mm for anti-rotation option

Ordering key

Linear units

L E M C - U - 2 1 0 5 - 0 1 0 0 - T R A F 1 - P 2 0 2 4 1 1 0 H

Linear unit only

Screw diameter

Screw lead

Stroke

Rear attachment
T Trunnions
F Front plate
B Back plate
N No attachment

Front attachment
M Male attachment
N No attachment (female thread)
R Rod end

Tube options
N No anti-rotation with standard sealing
S No anti-rotation with improved sealing (metallic scraper)
A Anti-rotation

Limit switches
F 2 limit switches and 1 home switch
S 2 limit switches only
M 1 limit switch and 1 home switch
L 1 limit switch only
H Home switch only
N No switch

Grease
1 Standard grease
2 Food grade grease
3 High load grease capacity
4 Short move grase capacity

L E M C - U - 2 1 0 5 - 0 1 0 0 - T R A F 1 - P 2 0 2 4 1 1 0 H

Motor adapter option

L	In line motor interface
P	Parallel motor interface
G	CAM gearbox (spur gear)
N	No interface

Ratio

10	(1 to 1) - only with L and P
15	(3 to 2) - only with P
20	(2 to 1) - only with P
39	(3,89 to 1) - only with G (spur gear)
98	(9,82 to 1) - only with G (spur gear)
2E	(24,95 to 1) - only with G (spur gear)

Motor shaft diameter[1)]

Motor centering diameter[1)]

Motor adapter option

L	Standard motor adapter (for in line or parallel adapter)
H	High capacity motor adapter (only for belt parallel adapter)
A	Spur gear, no rear attachment and no brake
B	Spur gear, no rear attachment and with brake
C	Spur gear, with 0° rear attachment and no brake
D	Spur gear, with 0° rear attachment and with brake
E	Spur gear, with 90° rear attachment and no brake
F	Spur gear, with 90° rear attachment and with brake

[1)] For standard third party motors please refer to **pages 173-175**

Example

Linear unit without motor interface

LEMC-U-2105-0100-TRAF1-N

Linear unit with motor interface

LEMC-U-2105-0100-TRAF1-L1019110L

LEMC-S-2105

Electric cylinder servo motor, inline configuration

Technical data

Designation	Symbol	Unit	Inline adapter and servo motor					
			L10 LA1	L10 LA2	L10 LA3	L10 LA4	L10 LA5	L10 LA6
Performance Data								
Continuous force @ zero speed	F_{c0}	kN	6,1	6,1	10,9	10,9	14,4	14,4
Continuous force @ max. speed	F_c	kN	5,3	4,1	9,6	7,2	13,0	10,6
Peak force @ zero speed	F_{p0}	kN	17,3	17,3	27,8	27,8	33,5	31
Peak force @ max. speed	Fp	kN	5,9	6,6	13,9	13	16,3	22,2
Dynamic load capacity	C	kN	50,5	50,5	50,5	50,5	50,5	50,5
Holding force (motorbrake option)	F_{Hold}	kN	17,1	17,1	17,1	17,1	17,1	17,1
Max. linear speed	v_{max}	mm/s	163	338	125	294	163	338
Max. acceleration	a_{max}	m/s^2	6	6	6	6	6	6
Duty cycle	D	%	100	100	100	100	100	100
Mechanical Data								
Screw type	–	–	Roller screw	Roller screw	Roller screw	Roller screw	Roller screw	Roller screw
Screw diameter	d_{screw}	mm	21	21	21	21	21	21
Screw lead	p_{screw}	mm	5	5	5	5	5	5
Lead accuracy	–	–	G5	G5	G5	G5	G5	G5
Stroke[1]	s	mm	100…600	100…600	100…600	100…600	100…600	100…600
Internal overstroke each side	s_0	mm	5	5	5	5	5	5
Backlash	$s_{backlash}$	mm	0,02	0,02	0,02	0,02	0,02	0,02
Gear reduction	i	–	1	1	1	1	1	1
Inertia @ 0 mm stroke	J	10^{-4} kgm^2	7,05	7,05	10,40	10,40	13,70	13,70
Δ Inertia per 100 mm stroke	ΔJ	10^{-4} kgm^2	0,15	0,15	0,15	0,15	0,15	0,15
Inertia of optional brake	J_{brake}	10^{-4} kgm^2	1,07	1,07	1,07	1,07	1,07	1,07
Weight @ 0 mm stroke	m	kg	15,3	15,3	18,4	18,4	21,5	21,5
Δ weight per 100 mm stroke	Δm	kg	1,15	1,15	1,15	1,15	1,15	1,15
Weight of optional brake	m_{brake}	kg	0,90	0,90	0,90	0,90	0,90	0,90
Weight of anti-rotation	m_{arot0}	kg	0,90	0,90	0,90	0,90	0,90	0,90
Electrical Data								
Motor type	–	–	Servo	Servo	Servo	Servo	Servo	Servo
Nominal voltage	U	V AC	400	400	400	400	400	400
Nominal current	I	A	2,7	5,5	4,1	8,2	6,2	12,4
Peak current	I_{peak}	A	10	20	12	24	16,8	31,2
Nominal power	P	kW	1,12	1,82	1,57	2,77	2,76	4,67
Environment								
Ambient temperature	$T_{ambient}$	°C	0…+40	0…+40	0…+40	0…+40	0…+40	0…+40
Degree of protection	IP	–	54S	54S	54S	54S	54S	54S

[1] By 100 mm steps

For more information regarding motors and motor adapters, please visit **pages 170-175**

Dimensional drawing

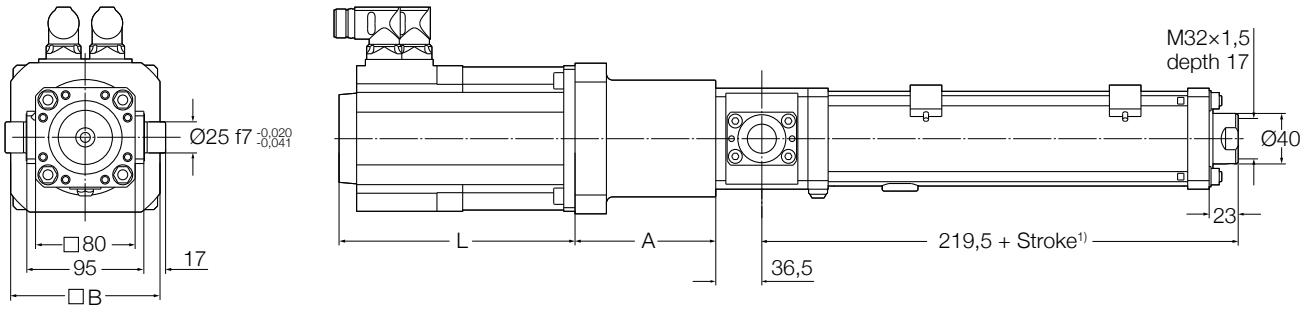

Reference	L²) mm	A	B
L10LA1	188	112	120
L10LA2	188	112	120
L10LA3	228	112	120
L10LA4	228	112	120
L10LA5	268	112	120
L10LA6	268	112	120

¹) Add 30 mm for anti-rotation option
²) For brake option add 20 mm. For absolute encoder option add 49 mm

Performance diagrams

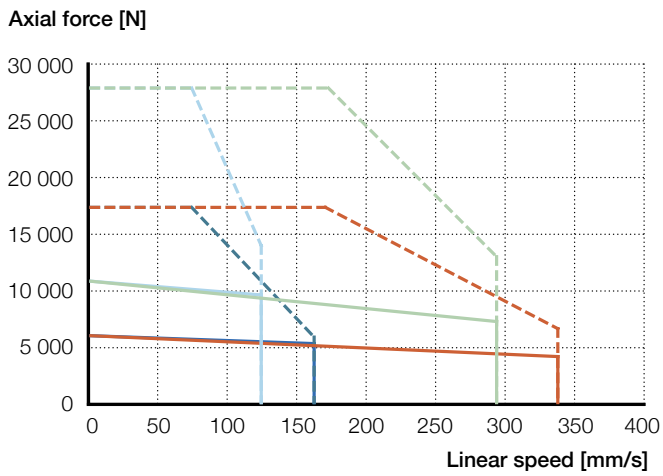

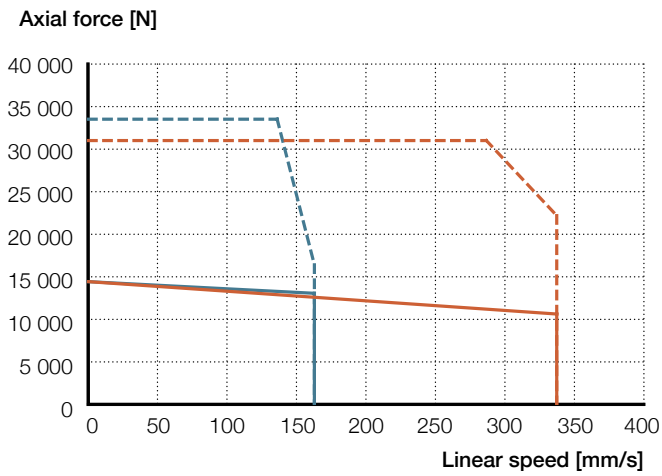

L10LA1	L10LA2	L10LA3	L10LA4
F_{cont}	F_{cont}	F_{cont}	F_{cont}
F_{peak}	F_{peak}	F_{peak}	F_{peak}

L10LA5	L10LA6
F_{cont}	F_{cont}
F_{peak}	F_{peak}

For Force / Lifetime diagrams see **page 180**

Ordering key

See **page 202**

LEMC-S-2105

Electric cylinder servo motor, parallel configuration

Technical data

Designation	Symbol	Unit	Parallel adapter and servo motor					
			P10 LA1	P10 LA2	P10 LA3	P10 LA4	L10 LA7	L10 LA8
Performance Data								
Continuous force @ zero speed	F_{c0}	kN	6	6	10,6	10,6	13,5	14
Continuous force @ max. speed	F_c	kN	5,1	4	9,3	7	10,5	10,2
Peak force @ zero speed	F_{p0}	kN	16,8	16,8	27	27	29,3	30,1
Peak force @ max. speed	Fp	kN	5,7	6,4	13,5	12,6	18,9	21,5
Dynamic load capacity	C	kN	50,5	50,5	50,5	50,5	50,5	50,5
Holding force (motorbrake option)	F_{Hold}	kN	17,6	17,6	17,6	17,6	26,5	17,6
Max. linear speed	v_{max}	mm/s	163	338	125	294	194	338
Max. acceleration	a_{max}	m/s^2	6	6	6	6	6	6
Duty cycle	D	%	100	100	100	100	100	100
Mechanical Data								
Screw type	–	–	Roller screw	Roller screw	Roller screw	Roller screw	Roller screw	Roller screw
Screw diameter	d_{screw}	mm	21	21	21	21	21	21
Screw lead	p_{screw}	mm	5	5	5	5	5	5
Lead accuracy	–	–	G5	G5	G5	G5	G5	G5
Stroke[1]	s	mm	100…600	100…600	100…600	100…600	100…600	100…600
Internal overstroke each side	s_0	mm	5	5	5	5	5	5
Backlash	$s_{backlash}$	mm	0,02	0,02	0,02	0,02	0,02	0,02
Gear reduction	i	–	1	1	1	1	1,5	1
Inertia @ 0 mm stroke	J	10^{-4} kgm^2	19,9	19,90	23,20	23,20	15,50	26,50
Δ Inertia per 100 mm stroke	ΔJ	10^{-4} kgm^2	0,15	0,15	0,15	0,15	0,07	0,15
Inertia of optional brake	J_{brake}	10^{-4} kgm^2	1,07	1,07	1,07	1,07	1,07	1,07
Weight @ 0 mm stroke	m	kg	17,2	17,2	20,3	20,3	20,2	23,4
Δ weight per 100 mm stroke	Δm	kg	1,15	1,15	1,15	1,15	1,15	1,15
Weight of optional brake	m_{brake}	kg	0,90	0,90	0,90	0,90	0,90	0,90
Weight of anti-rotation	m_{arot0}	kg	0,90	0,90	0,90	0,90	0,90	0,90
Electrical Data								
Motor type	–	–	Servo	Servo	Servo	Servo	Servo	Servo
Nominal voltage	U	V AC	400	400	400	400	400	400
Nominal current	I	A	2,7	5,5	4,1	8,2	7	12,4
Peak current	I_{peak}	A	10	20	12	24	16,8	31,2
Nominal power	P	kW	1,12	1,82	1,57	2,77	2,75	4,67
Environment								
Ambient temperature	$T_{ambient}$	°C	0…+40	0…+40	0…+40	0…+40	0…+40	0…+40
Degree of protection	IP	–	54S	54S	54S	54S	54S	54S

[1] By 100 mm steps

For more information regarding motors and motor adapters, please visit **pages 170-175**

Dimensional drawing

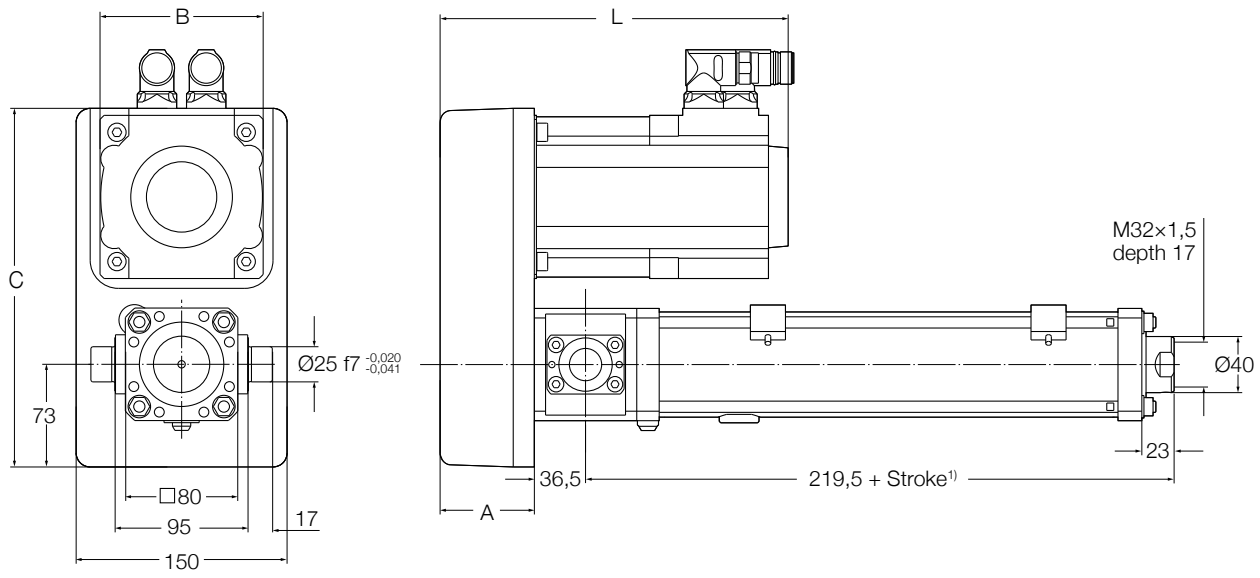

Reference	L²) mm	A	B	C
P10LA1	247,5	67	116	255
P10LA2	247,5	67	116	255
P10LA3	287,5	67	116	255
P10LA4	287,5	67	116	255
P15LA9	287,5	67	116	255
P10LA6	327,5	67	116	255

¹) Add 30 mm for anti-rotation option
²) For brake option add 20 mm. For absolute encoder option add 49 mm

Performance diagrams

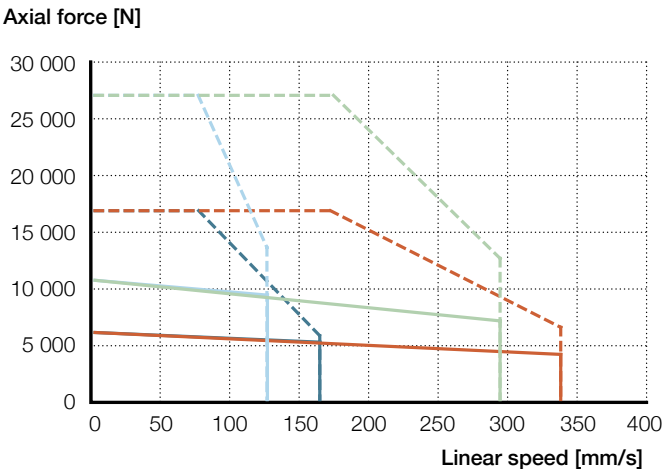

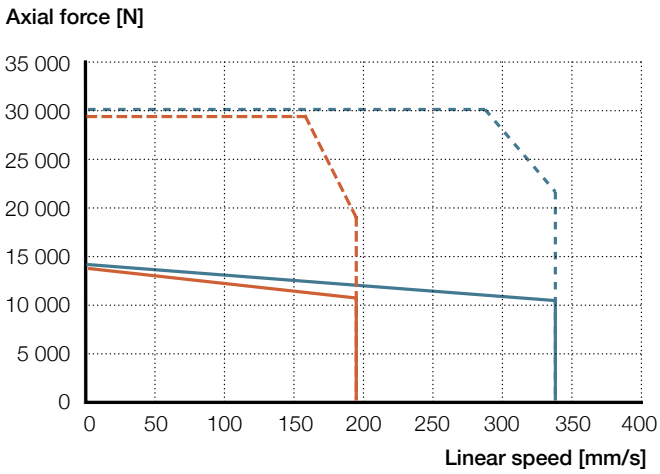

P10LA1	P10LA2	P10LA3	P10LA4
F_{cont}	F_{cont}	F_{cont}	F_{cont}
F_{peak}	F_{peak}	F_{peak}	F_{peak}

P15LA9	P10LA6
F_{cont}	F_{cont}
F_{peak}	F_{peak}

For Force / Lifetime diagrams see **page 180**

Ordering key

See **page 202**

LEMC-S-2110

Electric cylinder servo motor, inline configuration

Technical data

Designation	Symbol	Unit	Inline adapter and servo motor					
			L10	L10	L10	L10	P15	P10
			LA1	LA2	LA3	LA4	LA9	LA6
Performance Data								
Continuous force @ zero speed	F_{c0}	kN	3	3	5,4	5,4	7,1	7,1
Continuous force @ max. speed	F_c	kN	2,6	2	4,7	3,6	6,4	5,2
Peak force @ zero speed	F_{p0}	kN	8,5	8,5	13,7	13,7	26,5	26,1
Peak force @ max. speed	Fp	kN	2,9	3,3	6,9	6,4	8,1	10,9
Dynamic load capacity	C	kN	54,3	54,3	54,3	54,3	54,3	54,3
Holding force (motorbrake option)	F_{Hold}	kN	8,7	8,7	8,7	8,7	8,7	8,7
Max. linear speed	v_{max}	mm/s	325	675	250	588	325	675
Max. acceleration	a_{max}	m/s^2	12	12	12	12	12	12
Duty cycle	D	%	100	100	100	100	100	100
Mechanical Data								
Screw type	–	–	Roller screw	Roller screw	Roller screw	Roller screw	Roller screw	Roller screw
Screw diameter	d_{screw}	mm	21	21	21	21	21	21
Screw lead	p_{screw}	mm	10	10	10	10	10	10
Lead accuracy	–	–	G5	G5	G5	G5	G5	G5
Stroke[1]	s	mm	100…600	100…600	100…600	100…600	100…600	100…600
Internal overstroke each side	s_0	mm	5	5	5	5	5	5
Backlash	$s_{backlash}$	mm	0,04	0,04	0,04	0,04	0,04	0,04
Gear reduction	i	–	1	1	1	1	1	1
Inertia @ 0 mm stroke	J	10^{-4} kgm^2	7,05	7,05	10,40	10,40	13,70	13,70
Δ Inertia per 100 mm stroke	ΔJ	10^{-4} kgm^2	0,15	0,15	0,15	0,15	0,15	0,15
Inertia of optional brake	J_{brake}	10^{-4} kgm^2	1,07	1,07	1,07	1,07	1,07	1,07
Weight @ 0 mm stroke	m	kg	15,3	15,3	18,4	18,4	21,5	21,5
Δ weight per 100 mm stroke	Δm	kg	1,15	1,15	1,15	1,15	1,15	1,15
Weight of optional brake	m_{brake}	kg	0,90	0,90	0,90	0,90	0,90	0,90
Weight of anti-rotation	m_{arot0}	kg	0,90	0,90	0,90	0,90	0,90	0,90
Electrical Data								
Motor type	–	–	Servo	Servo	Servo	Servo	Servo	Servo
Nominal voltage	U	V AC	400	400	400	400	400	400
Nominal current	I	A	2,7	5,5	4,1	8,2	6,2	12,4
Peak current	I_{peak}	A	10	20	12	24	28	56
Nominal power	P	kW	1,12	1,82	1,57	2,77	2,76	4,67
Environment								
Ambient temperature	$T_{ambient}$	°C	0…+40	0…+40	0…+40	0…+40	0…+40	0…+40
Degree of protection	IP	–	54S	54S	54S	54S	54S	54S

[1] By 100 mm steps

For more information regarding motors and motor adapters, please visit **pages 170-175**

Dimensional drawing

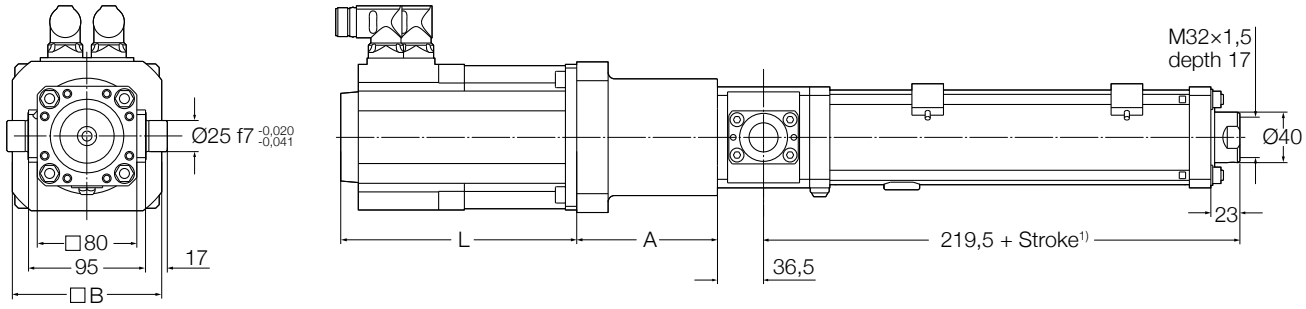

Reference	L[2] mm	A	B
L10LA1	188	112	120
L10LA2	188	112	120
L10LA3	228	112	120
L10LA4	228	112	120
L10LA7	268	112	120
L10LA8	268	112	120

[1] Add 30 mm for anti-rotation option
[2] For brake option add 20 mm. For absolute encoder option add 49 mm

Performance diagrams

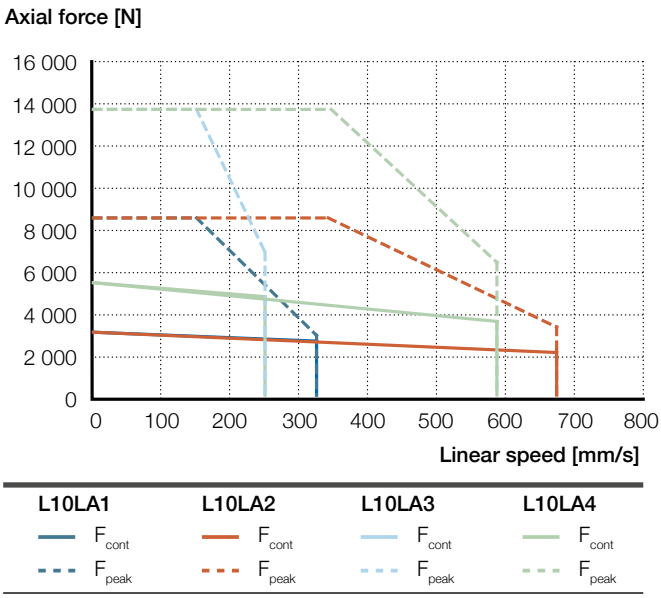

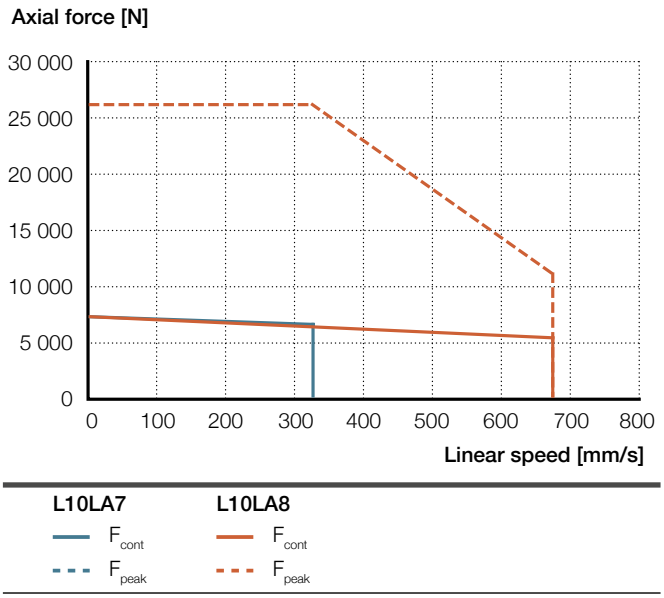

For Force / Lifetime diagrams see **page 180**

Ordering key

See **page 202**

LEMC-S-2110

Electric cylinder servo motor, parallel configuration

Technical data

Designation	Symbol	Unit	Parallel adapter and servo motor					
			P10 LA1	P10 LA2	P10 LA3	P20 LA3	P10 LA4	P20 LA4
Performance Data								
Continuous force @ zero speed	F_{c0}	kN	2,9	2,9	5,2	10,5	5,2	10,5
Continuous force @ max. speed	F_c	kN	2,5	2	4,6	9,2	3,4	6,9
Peak force @ zero speed	F_{p0}	kN	8,3	8,3	13,3	26,7	13,3	26,7
Peak force @ max. speed	Fp	kN	2,8	3,2	6,7	13,3	6,2	12,4
Dynamic load capacity	C	kN	54,3	54,3	54,3	54,3	54,3	54,3
Holding force (motorbrake option)	F_{Hold}	kN	9	9	9	18	9	18
Max. linear speed	v_{max}	mm/s	325	675	250	125	588	294
Max. acceleration	a_{max}	m/s^2	12	12	12	12	12	12
Duty cycle	D	%	100	100	100	100	100	100
Mechanical Data								
Screw type	–	–	Roller screw	Roller screw	Roller screw	Roller screw	Roller screw	Roller screw
Screw diameter	d_{screw}	mm	21	21	21	21	21	21
Screw lead	p_{screw}	mm	10	10	10	10	10	10
Lead accuracy	–	–	G5	G5	G5	G5	G5	G5
Stroke[1]	s	mm	100…600	100…600	100…600	100…600	100…600	100…600
Internal overstroke each side	s_0	mm	5	5	5	5	5	5
Backlash	$s_{backlash}$	mm	0,04	0,04	0,04	0,04	0,04	0,04
Gear reduction	i	–	1	1	1	2	1	2
Inertia @ 0 mm stroke	J	10^{-4} kgm^2	19,9	19,90	23,20	17,20	23,20	17,20
Δ Inertia per 100 mm stroke	ΔJ	10^{-4} kgm^2	0,15	0,15	0,15	0,04	0,15	0,04
Inertia of optional brake	J_{brake}	10^{-4} kgm^2	1,07	1,07	1,07	1,07	1,07	1,07
Weight @ 0 mm stroke	m	kg	17,2	17,2	20,3	16,8	20,3	16,8
Δ weight per 100 mm stroke	Δm	kg	1,15	1,15	1,15	1,15	1,15	1,15
Weight of optional brake	m_{brake}	kg	0,90	0,90	0,90	0,90	0,90	0,90
Weight of anti-rotation	m_{arot0}	kg	0,90	0,90	0,90	0,90	0,90	0,90
Electrical Data								
Motor type	–	–	Servo	Servo	Servo	Servo	Servo	Servo
Nominal voltage	U	V AC	400	400	400	400	400	400
Nominal current	I	A	2,7	5,5	4,1	4,1	8,2	8,2
Peak current	I_{peak}	A	10	20	12	12	24	24
Nominal power	P	kW	1,12	1,82	1,57	1,57	2,77	2,77
Environment								
Ambient temperature	$T_{ambient}$	°C	0…+40	0…+40	0…+40	0…+40	0…+40	0…+40
Degree of protection	IP	–	54S	54S	54S	54S	54S	54S

[1] By 100 mm steps

For more information regarding motors and motor adapters, please visit **pages 170-175**

Dimensional drawing

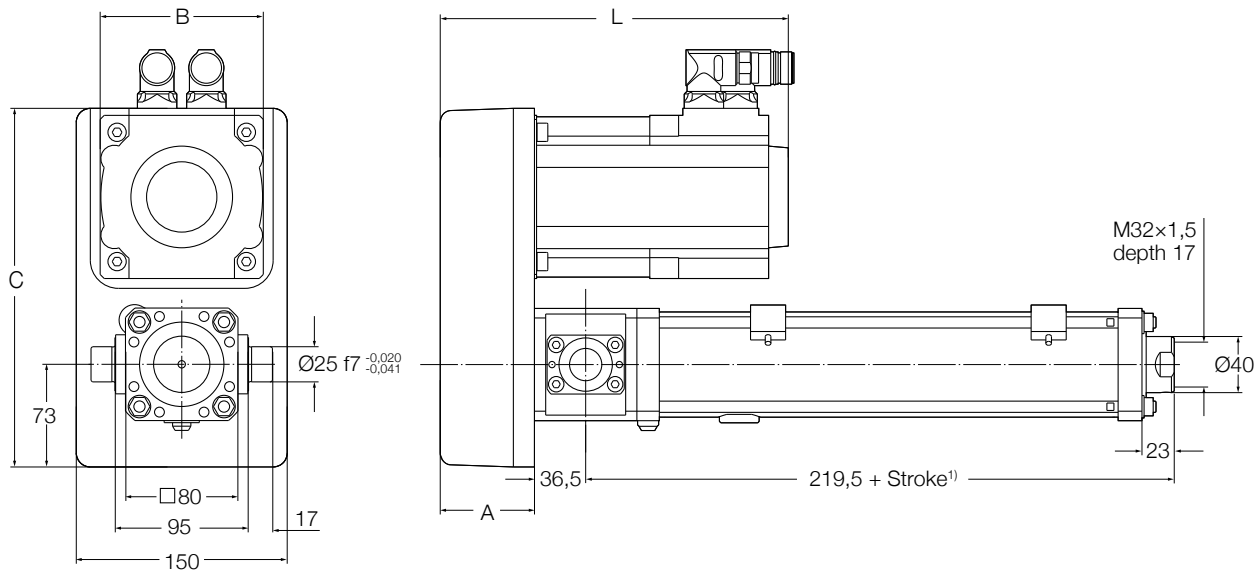

Reference	L²) mm	A	B	C
P10LA1	247,5	67	116	255
P10LA2	247,5	67	116	255
P10LA3	287,5	67	116	255
P20LA3	287,5	67	116	255
P10LA4	287,5	67	116	255
P20LA4	287,5	67	116	255

¹) Add 30 mm for anti-rotation option
²) For brake option add 20 mm. For absolute encoder option add 49 mm

Performance diagrams

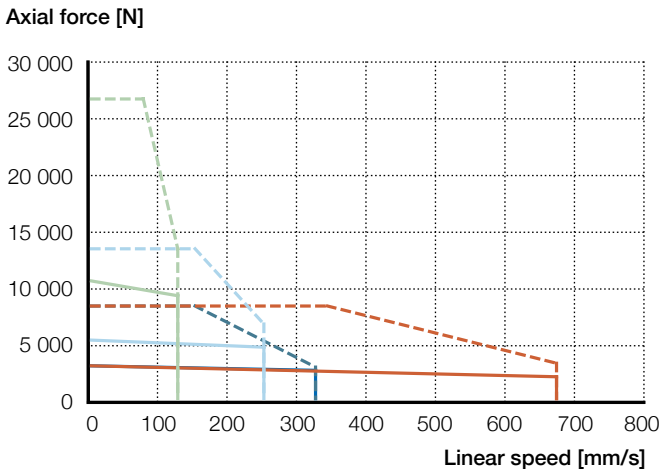

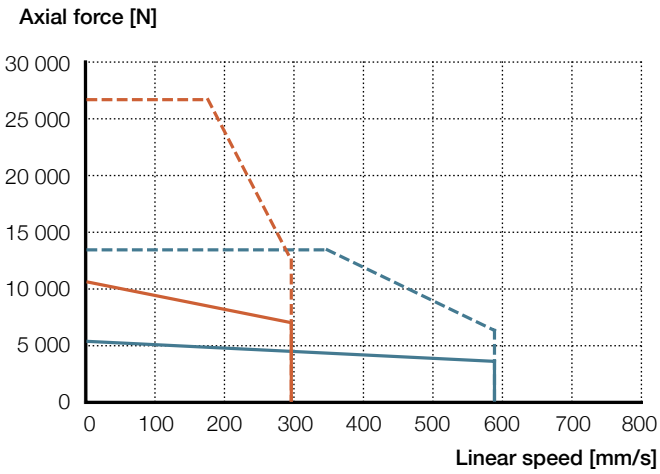

P10LA1	P10LA2	P10LA3	P20LA3
F_{cont}	F_{cont}	F_{cont}	F_{cont}
F_{peak}	F_{peak}	F_{peak}	F_{peak}

P10LA4	P20LA4
F_{cont}	F_{cont}
F_{peak}	F_{peak}

For Force / Lifetime diagrams see **page 180**

Ordering key

See **page 202**

LEMC-S-3005

Electric cylinder servo motor, inline configuration

Technical data

Designation	Symbol	Unit	Inline adapter and servo motor					
			L10 LA3	L10 LA4	L10 LB1	L10 LB2	L10 LB5	L10 LB6
Performance Data								
Continuous force @ zero speed	F_{c0}	kN	10,5	10,5	19,3	19,3	34	32,9
Continuous force @ max. speed	F_c	kN	9,2	6,9	14,7	12,9	27,5	19,3
Peak force @ zero speed	F_{p0}	kN	26,6	26,6	50,5	50,5	69	54,9
Peak force @ max. speed	Fp	kN	13,3	12,4	17,6	18,2	31,2	24,9
Dynamic load capacity	C	kN	106	106	106	106	106	106
Holding force (motorbrake option)	F_{Hold}	kN	18,2	18,2	33,3	33,3	33,3	33,3
Max. linear speed	v_{max}	mm/s	125	294	125	269	113	269
Max. acceleration	a_{max}	m/s^2	6	6	6	6	6	6
Duty cycle	D	%	100	100	100	100	100	100
Mechanical Data								
Screw type	–	–	Roller screw	Roller screw	Roller screw	Roller screw	Roller screw	Roller screw
Screw diameter	d_{screw}	mm	30	30	30	30	30	30
Screw lead	p_{screw}	mm	5	5	5	5	5	5
Lead accuracy	–	–	G5	G5	G5	G5	G5	G5
Stroke[1]	s	mm	100…800	100…800	100…800	100…800	100…800	100…800
Internal overstroke each side	s_0	mm	5	5	5	5	5	5
Backlash	$s_{backlash}$	mm	0,02	0,02	0,020	0,02	0,02	0,02
Gear reduction	i	–	1	1	1	1	1	1
Inertia @ 0 mm stroke	J	10^{-4} kgm^2	13,90	13,90	22,2	22,20	42,70	42,70
Δ Inertia per 100 mm stroke	ΔJ	10^{-4} kgm^2	0,65	0,65	0,65	0,65	0,65	0,65
Inertia of optional brake	J_{brake}	10^{-4} kgm^2	1,07	1,07	3,20	3,20	3,20	3,20
Weight @ 0 mm stroke	m	kg	27,1	27,1	33,1	33,1	42,5	42,5
Δ weight per 100 mm stroke	Δm	kg	2,05	2,05	2,05	2,05	2,05	2,05
Weight of optional brake	m_{brake}	kg	0,90	0,90	1,90	1,90	1,90	1,90
Weight of anti-rotation	m_{arot0}	kg	1,30	1,30	1,30	1,30	1,30	1,30
Electrical Data								
Motor type	–	–	Servo	Servo	Servo	Servo	Servo	Servo
Nominal voltage	U	V AC	400	400	400	400	400	400
Nominal current	I	A	4,1	8,2	8,5	16,9	12,2	23,5
Peak current	I_{peak}	A	12	24	26	52	31,2	47
Nominal power	P	kW	1,57	2,77	2,51	4,73	4,24	7,09
Environment								
Ambient temperature	$T_{ambient}$	°C	0…+40	0…+40	0…+40	0…+40	0…+40	0…+40
Degree of protection	IP	–	54S	54S	54S	54S	54S	54S

[1] By 100 mm steps

For more information regarding motors and motor adapters, please visit **pages 170-175**

Dimensional drawing

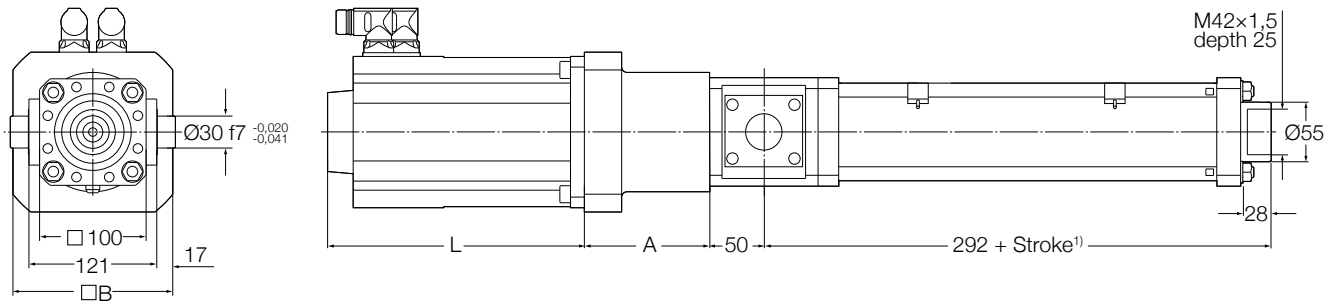

Reference	L¹) mm	A	B
L10LA3	228	106	120
L10LA4	228	106	120
L10LB1	241	113	150
L10LB2	241	113	150
L10LB5	321	113	150
L10LB6	321	113	150

¹) For brake option add 28 mm. For absolute encoder option add 50 mm

Performance diagrams

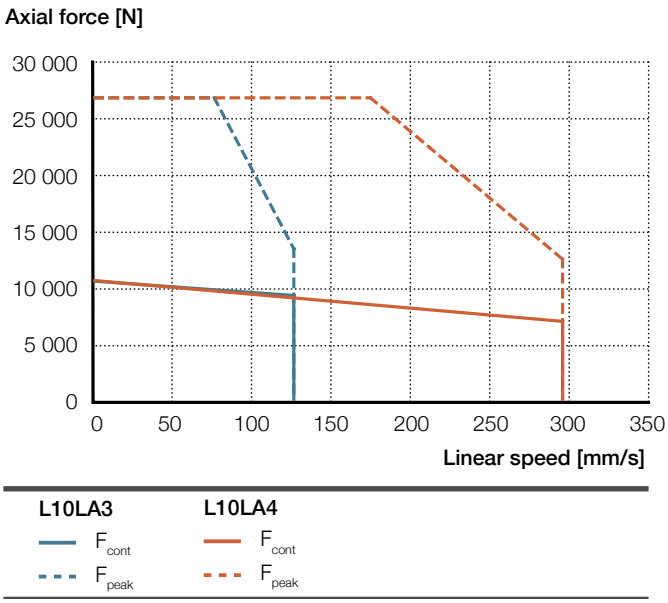

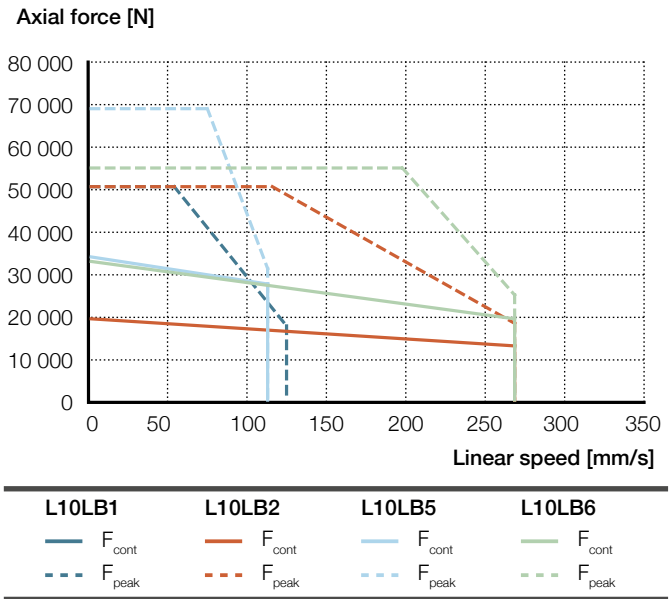

For Force / Lifetime diagrams see **page 182**

Ordering key

See **page 202**

LEMC-S-3005

Electric cylinder servo motor, parallel configuration

Technical data

Designation	Symbol	Unit	Parallel adapter and servo motor					
			P10 LA3	P10 LA4	P15 LA5	P15 LA6	P10 LB5	P10 LB6
Performance Data								
Continuous force @ zero speed	F_{c0}	kN	10,2	10,2	20	20	32,9	31,9
Continuous force @ max. speed	F_c	kN	8,9	6,7	18	14,7	26,7	18,7
Peak force @ zero speed	F_{p0}	kN	25,8	25,8	46,6	43,1	67	53,3
Peak force @ max. speed	Fp	kN	12,9	12	22,7	30,9	30,3	24,1
Dynamic load capacity	C	kN	106	106	106	106	106	106
Holding force (motorbrake option)	F_{Hold}	kN	18,7	18,7	28,1	28,1	34,3	34,3
Max. linear speed	v_{max}	mm/s	125	294	108	225	113	269
Max. acceleration	a_{max}	m/s^2	4,6	4,6	4,6	4,2	6	6
Duty cycle	D	%	100	100	100	100	100	100
Mechanical Data								
Screw type	–	–	Roller screw	Roller screw	Roller screw	Roller screw	Roller screw	Roller screw
Screw diameter	d_{screw}	mm	30	30	30	30	30	30
Screw lead	p_{screw}	mm	5	5	5	5	5	5
Lead accuracy	–	–	G5	G5	G5	G5	G5	G5
Stroke[1]	s	mm	100…800	100…800	100…800	100…800	100…800	100…800
Internal overstroke each side	s_0	mm	5	5	5	5	5	5
Backlash	$s_{backlash}$	mm	0,02	0,02	0,02	0,02	0,02	0,02
Gear reduction	i	–	1	1	1,5	1,5	1	1
Inertia @ 0 mm stroke	J	10^{-4} kgm^2	49,90	49,90	40,3	40,30	77,30	77,30
Δ Inertia per 100 mm stroke	ΔJ	10^{-4} kgm^2	0,65	0,65	0,3	0,3	0,65	0,65
Inertia of optional brake	J_{brake}	10^{-4} kgm^2	1,07	1,07	1,07	1,07	3,20	3,20
Weight @ 0 mm stroke	m	kg	29,9	29,9	33,6	33,6	45,1	45,1
Δ weight per 100 mm stroke	Δm	kg	2,05	2,05	2,05	2,05	2,05	2,05
Weight of optional brake	m_{brake}	kg	0,90	0,90	0,90	0,90	1,90	1,90
Weight of anti-rotation	m_{arot0}	kg	1,30	1,30	1,30	1,30	1,30	1,30
Electrical Data								
Motor type	–	–	Servo	Servo	Servo	Servo	Servo	Servo
Nominal voltage	U	V AC	400	400	400	400	400	400
Nominal current	I	A	4,1	8,2	6,2	12,4	12,2	23,5
Peak current	I_{peak}	A	12	24	16,8	31,2	31,2	47
Nominal power	P	kW	1,57	2,77	2,76	4,67	4,24	7,09
Environment								
Ambient temperature	$T_{ambient}$	°C	0…+40	0…+40	0…+40	0…+40	0…+40	0…+40
Degree of protection	IP	–	54S	54S	54S	54S	54S	54S

[1] By 100 mm steps

For more information regarding motors and motor adapters, please visit **pages 170-175**

Dimensional drawing

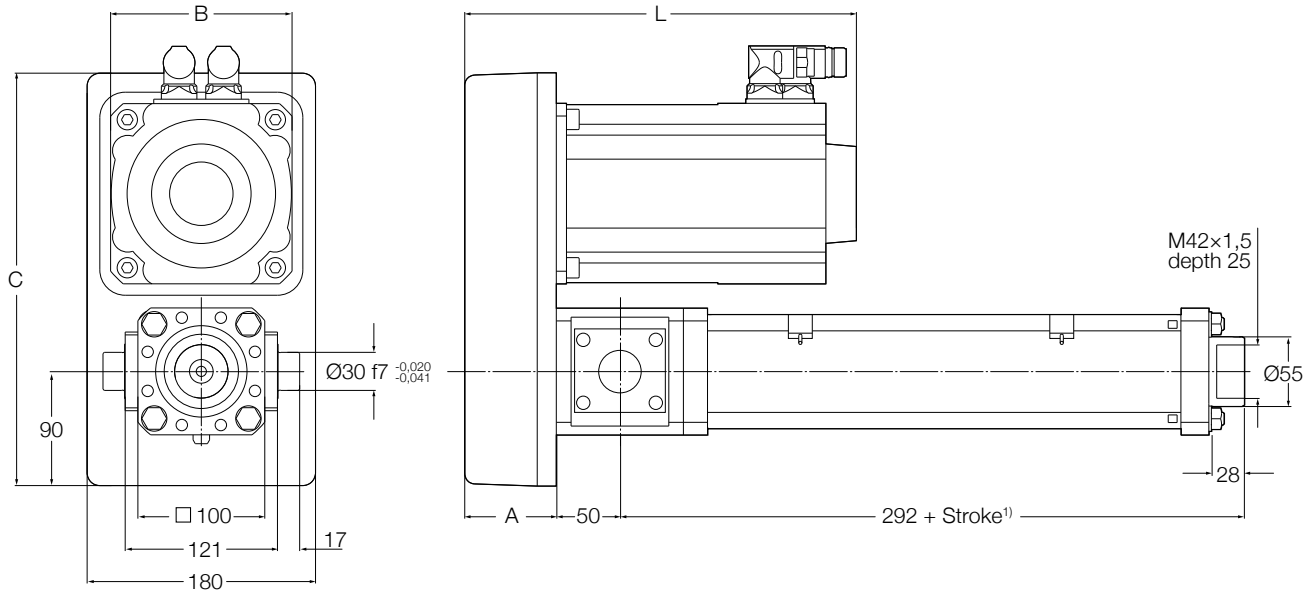

Reference	L[2]	A	B	C
	mm	mm	mm	mm
P10LA3	292	72	116	325
P10LA4	292	72	116	325
P15LA5	332	72	116	325
P15LA6	332	72	116	325
P10LB5	388	72	143	325
P10LB6	388	72	143	325

[1] Add 30 mm for anti-rotation option
[2] For brake option add 28 mm. For absolute encoder option add 50 mm

Performance diagrams

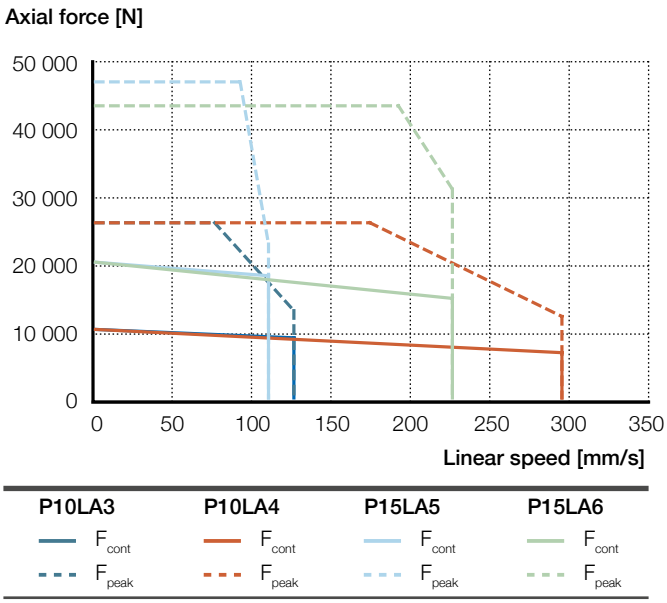

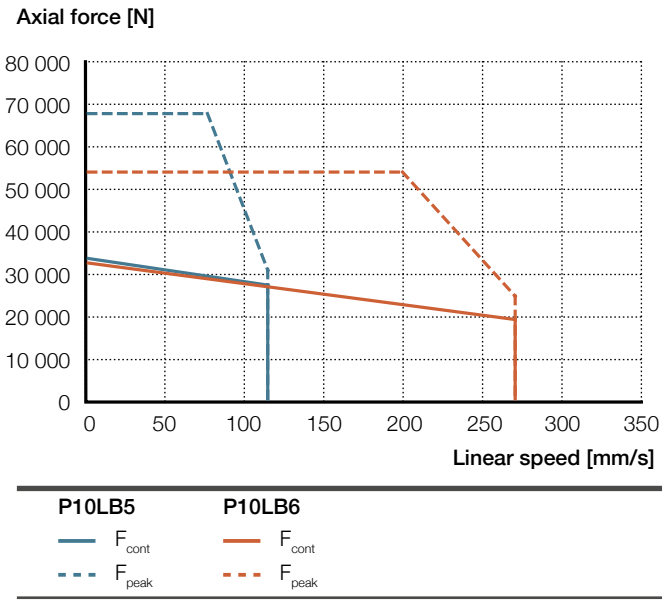

For Force / Lifetime diagrams see **page 182**

Ordering key

See **page 202**

LEMC-S-3010

Electric cylinder servo motor, inline configuration

Technical data

Designation	Symbol	Unit	Inline adapter and servo motor					
			L10 LA3	L10 LA4	L10 LB1	L10 LB2	L10 LB7	L10 LB8
Performance Data								
Continuous force @ zero speed	F_{c0}	kN	5,6	5,6	10,4	10,4	18,3	18,3
Continuous force @ max. speed	F_c	kN	5	3,7	7,9	6,9	14,9	10,4
Peak force @ zero speed	F_{p0}	kN	14,4	14,4	27,2	27,2	52	52
Peak force @ max. speed	Fp	kN	7,2	6,7	9,5	9,8	16,8	13,4
Dynamic load capacity	C	kN	122	122	122	122	122	122
Holding force (motorbrake option)	F_{Hold}	kN	8,2	8,2	15,1	15,1	15,1	15,1
Max. linear speed	v_{max}	mm/s	250	588	250	538	225	538
Max. acceleration	a_{max}	m/s^2	12	12	12	12	12	12
Duty cycle	D	%	100	100	100	100	100	100
Mechanical Data								
Screw type	–	–	Roller screw	Roller screw	Roller screw	Roller screw	Roller screw	Roller screw
Screw diameter	d_{screw}	mm	30	30	30	30	30	30
Screw lead	p_{screw}	mm	10	10	10	10	10	10
Lead accuracy	–	–	G5	G5	G5	G5	G5	G5
Stroke[1]	s	mm	100…800	100…800	100…800	100…800	100…800	100…800
Internal overstroke each side	s_0	mm	5	5	5	5	5	5
Backlash	$s_{backlash}$	mm	0,04	0,04	0,04	0,04	0,04	0,04
Gear reduction	i	–	1	1	1	1	1	1
Inertia @ 0 mm stroke	J	10^{-4} kgm^2	13,90	13,90	22,20	22,20	42,70	42,70
Δ Inertia per 100 mm stroke	ΔJ	10^{-4} kgm^2	0,65	0,65	0,65	0,65	0,65	0,65
Inertia of optional brake	J_{brake}	10^{-4} kgm^2	1,07	1,07	3,20	3,20	3,20	3,20
Weight @ 0 mm stroke	m	kg	27,1	27,1	33,1	33,1	42,5	42,5
Δ weight per 100 mm stroke	Δm	kg	2,05	2,05	2,05	2,05	2,05	2,05
Weight of optional brake	m_{brake}	kg	0,90	0,90	1,90	1,90	1,90	1,90
Weight of anti-rotation	m_{arot0}	kg	1,30	1,30	1,30	1,30	1,30	1,30
Electrical Data								
Motor type	–	–	Servo	Servo	Servo	Servo	Servo	Servo
Nominal voltage	U	V AC	400	400	400	400	400	400
Nominal current	I	A	4,1	8,2	8,5	16,9	12,2	24,3
Peak current	I_{peak}	A	12	24	26	52	46	92
Nominal power	P	kW	1,57	2,77	2,51	4,73	4,24	7,09
Environment								
Ambient temperature	$T_{ambient}$	°C	0…+40	0…+40	0…+40	0…+40	0…+40	0…+40
Degree of protection	IP	–	54S	54S	54S	54S	54S	54S

[1] By 100 mm steps

For more information regarding motors and motor adapters, please visit **pages 170-175**

Dimensional drawing

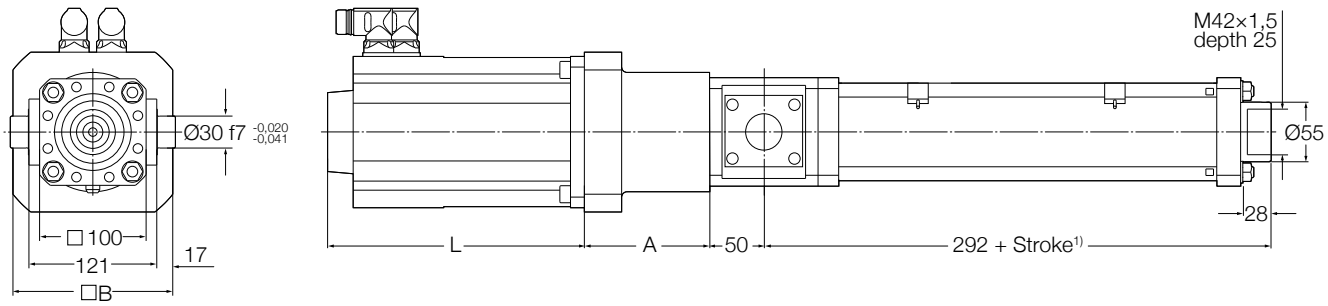

Reference	L2) mm	A	B
L10LA3	228	106	120
L10LA4	228	106	120
L10LB1	241	113	150
L10LB2	241	113	150
L10LB7	321	113	150
L10LB8	321	113	150

1) Add 30 mm for anti-rotation option
2) For brake option add 28 mm. For absolute encoder option add 50 mm

Performance diagrams

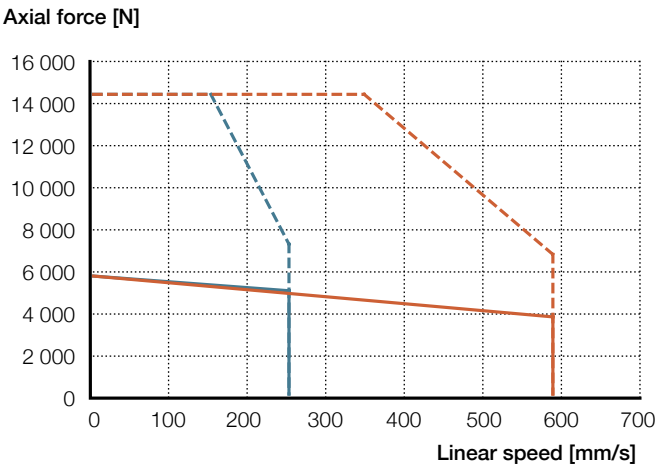

L10LA3 — F_{cont}, F_{peak}
L10LA4 — F_{cont}, F_{peak}

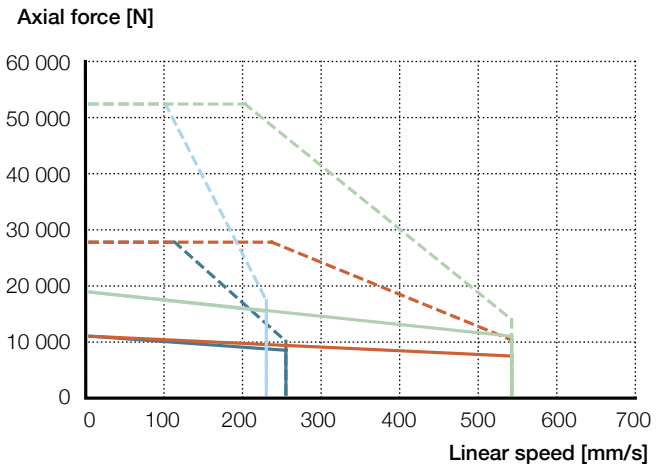

L10LB1 — F_{cont}, F_{peak}
L10LB2 — F_{cont}, F_{peak}
L10LB7 — F_{cont}, F_{peak}
L10LB8 — F_{cont}, F_{peak}

For Force / Lifetime diagrams see **page 182**

Ordering key

See **page 202**

LEMC-S-3010

Electric cylinder servo motor, parallel configuration

Technical data

Designation	Symbol	Unit	Parallel adapter and servo motor					
			P20	P20	P20	P20	P15	P15
			LA1	LA2	LA5	LA6	LB5	LC2
Performance Data								
Continuous force @ zero speed	F_{c0}	kN	6,2	6,2	14,4	14,4	26,7	26,7
Continuous force @ max. speed	F_c	kN	5,3	4,1	13	10,6	21,6	15,1
Peak force @ zero speed	F_{p0}	kN	17,3	17,3	33,5	31	54,2	49,6
Peak force @ max. speed	Fp	kN	5,9	6,6	16,3	22,2	24,5	19,5
Dynamic load capacity	C	kN	122	122	122	122	122	122
Holding force (motorbrake option)	F_{Hold}	kN	17	17	17	17	23,4	23,3
Max. linear speed	v_{max}	mm/s	163	338	163	338	150	358
Max. acceleration	a_{max}	m/s^2	4,7	4,7	6	5,5	7,4	6,8
Duty cycle	D	%	100	100	100	100	100	100
Mechanical Data								
Screw type	–	–	Roller screw	Roller screw	Roller screw	Roller screw	Roller screw	Roller screw
Screw diameter	d_{screw}	mm	30	30	30	30	30	30
Screw lead	p_{screw}	mm	10	10	10	10	10	10
Lead accuracy	–	–	G5	G5	G5	G5	G5	G5
Stroke[1]	s	mm	100…800	100…800	100…800	100…800	100…800	100…800
Internal overstroke each side	s_0	mm	5	5	5	5	5	5
Backlash	$s_{backlash}$	mm	0,04	0,04	0,04	0,04	0,04	0,04
Gear reduction	i	–	2	2	2	2	1,5	1,5
Inertia @ 0 mm stroke	J	10^{-4} kgm^2	30,20	30,2	46,30	46,30	107,00	107,00
Δ Inertia per 100 mm stroke	ΔJ	10^{-4} kgm^2	0,16	0,16	0,16	0,16	0,29	0,29
Inertia of optional brake	J_{brake}	10^{-4} kgm^2	1,07	1,07	1,07	1,07	3,20	3,20
Weight @ 0 mm stroke	m	kg	21,1	21,1	35,8	35,8	48,5	48,5
Δ weight per 100 mm stroke	Δm	kg	2,05	2,05	2,05	2,05	2,05	2,05
Weight of optional brake	m_{brake}	kg	0,90	0,90	0,90	0,90	1,90	1,90
Weight of anti-rotation	m_{arot0}	kg	1,30	1,30	1,30	1,30	1,30	1,30
Electrical Data								
Motor type	–	–	Servo	Servo	Servo	Servo	Servo	Servo
Nominal voltage	U	V AC	400	400	400	400	400	400
Nominal current	I	A	2,7	5,5	6,2	12,4	12,2	24,3
Peak current	I_{peak}	A	10	20	16,8	31,2	31,2	56
Nominal power	P	kW	1,12	1,82	2,76	4,67	4,24	7,09
Environment								
Ambient temperature	$T_{ambient}$	°C	0…+40	0…+40	0…+40	0…+40	0…+40	0…+40
Degree of protection	IP	–	54S	54S	54S	54S	54S	54S

[1] By 100 mm steps

For more information regarding motors and motor adapters, please visit **pages 170-175**

Dimensional drawing

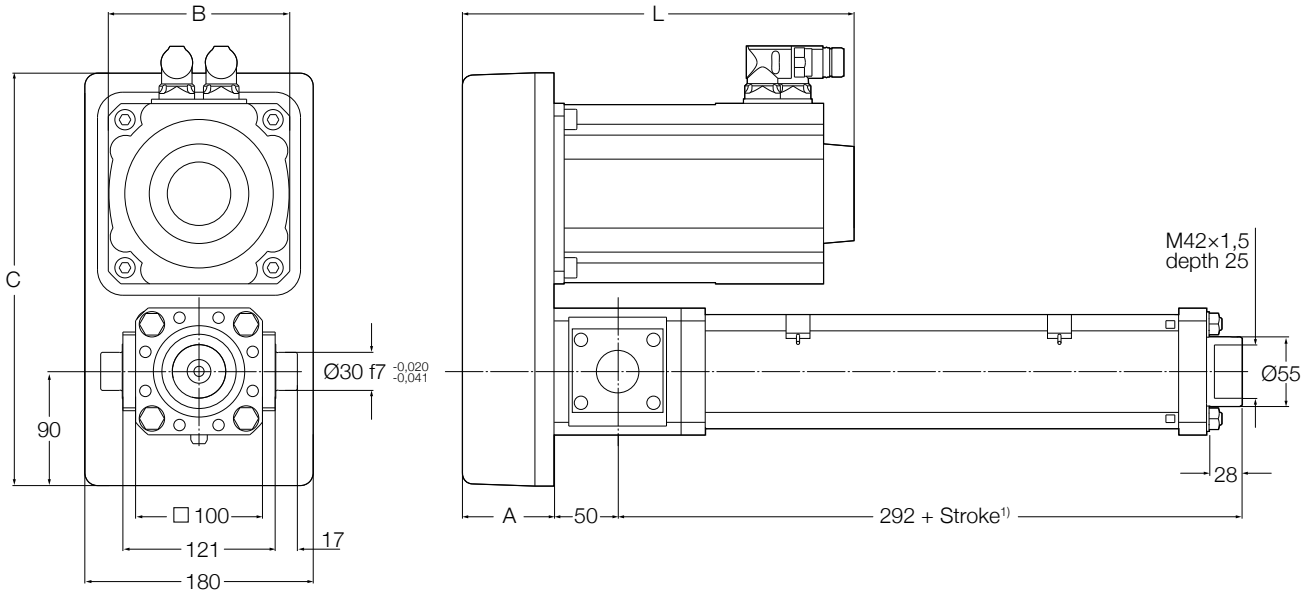

Reference	L¹) mm	A	B	C
P20LA1	252	72	116	325
P20LA2	252	72	116	325
P20LA5	332	72	116	325
P20LA6	332	72	116	325
P15LB5	388	72	143	325
P15LC2	338	72	143	325

¹) Add 30 mm for anti-rotation option
²) For brake option add 28 mm. For absolute encoder option add 50 mm

Performance diagrams

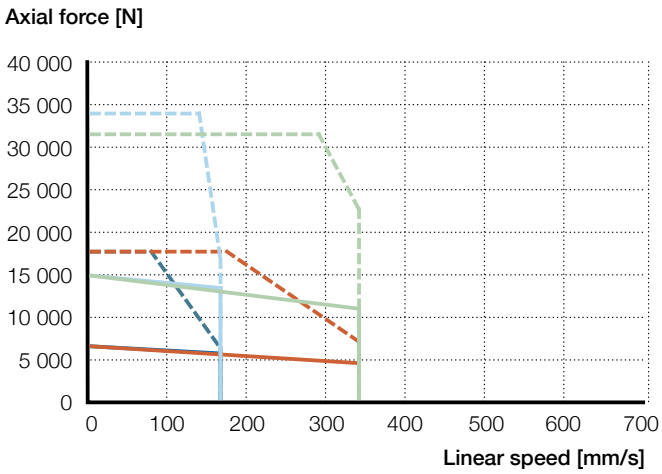

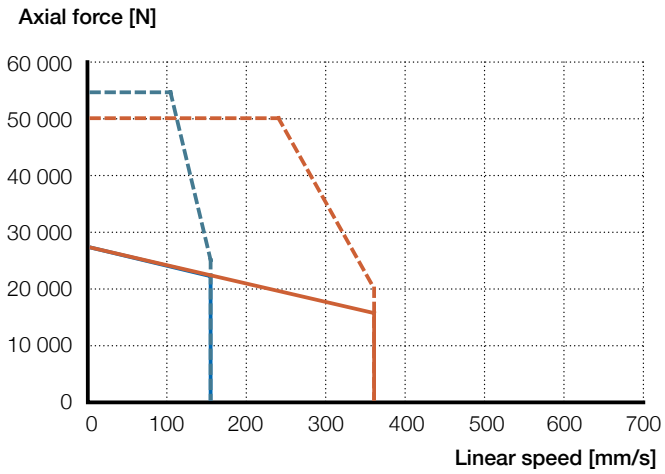

P20LA1	P20LA2	P20LA5	P20LA6
F_{cont}	F_{cont}	F_{cont}	F_{cont}
F_{peak}	F_{peak}	F_{peak}	F_{peak}

P15LB5	P15LC2
F_{cont}	F_{cont}
F_{peak}	F_{peak}

For Force / Lifetime diagrams see **page 182**

Ordering key

See **page 202**

Ordering key

Actuators with servo motors

L E M C - S - 2 1 0 5 - 0 1 0 0 - T R A F 1 - P 1 0 L A 1 1 B Y A 1

Servo motor

Screw diameter

Screw lead

Stroke

Rear attachment

T	Trunnions
F	Front plate
B	Back plate
N	No attachment

Front attachment

M	Male attachment
N	No attachment (female thread)
R	Rod end

Tube options

N	No anti-rotation with standard sealing
S	No anti-rotation with improved sealing (metallic scraper)
A	Anti-rotation

Limit switches

F	2 limit switches and 1 home switch
S	2 limit switches only
M	1 limit switch and 1 home switch
L	1 limit switch only
H	Home switch only
N	No switch

Grease

1	Standard grease
2	Food grade grease
3	High load grease capacity
4	Short move grase capacity

EWELLIX

LEMC - S - 2105 - 0100 - TRAF1 - P10LA11BYA1

Interface and gear ratio
See **pages 170 and 171** – Table: Performance overview of actuators with servo motors

Motor
See **pages 170 and 171** – Table: Performance overview of actuators with servo motors

Feedback
1 Resolver
2 Absolute encoder Hiperface
3 Absolute encoder EnDat

EM brake
B Brake 24 V DC
N No brake

Motor Drive
Y Drive included
N No drive

Drive fieldbus
A CANopen
B DeviceNet
C EtherCAT
D Ethernet
E Powerlink MN/CN
F Powerlink CN
G Profibus
H Profinet
N No fieldbus

Power and signal cables
1 5 m
2 10 m
3 15 m
4 20 m
N No cable

LEMC-A-2110

Electric cylinder asynchronous motor, L-configuration

Technical data

Designation	Symbol	Unit	L-configuration adapter and asynchronous motor		
			B054	B151	B319
			LAA2	LAA2	LBA2
Performance Data					
Continuous force @ max. speed	F_c	kN	4,3	12	25,4
Dynamic load capacity	C	kN	54,3	54,3	54,3
Holding force (motorbrake option)	F_{Hold}	kN	16	40	40
Min. linear speed	v_{min}	mm/s	15,5	5,5	2,7
Max. linear speed	v_{max}	mm/s	80,2	28,7	13,5
Duty cycle	D	%	100	100	100
Mechanical Data					
Screw type	–	–	Roller screw	Roller screw	Roller screw
Screw diameter	d_{screw}	mm	21	21	21
Screw lead	p_{screw}	mm	10	10	10
Lead accuracy			G5	G5	G5
Stroke[1]	s	mm	100…600	100…600	100…600
Internal overstroke each side	s_0	mm	5	5	5
Backlash	$s_{backlash}$	mm	0,04	0,04	0,04
Gear reduction	i	–	5,411	15,111	31,919
Inertia @ 0 mm stroke	J	10^{-4} kgm²	4,0600	3,7700	3,7400
Δ Inertia per 100 mm stroke	ΔJ	10^{-4} kgm²	0,0051	0,0007	0,0001
Inertia of optional brake	J_{brake}	10^{-4} kgm²	0,0150	0,0150	0,0150
Weight @ 0 mm stroke	m	kg	17,3	17,3	18,7
Δ weight per 100 mm stroke	Δm	kg	1,15	1,15	1,15
Weight of optional brake	m_{brake}	kg	0,90	0,90	0,90
Weight of anti-rotation	m_{arot0}	kg	0,90	0,90	0,90
Electrical Data					
Motor type	–	–	Asynchronous	Asynchronous	Asynchronous
Nominal voltage	U	V AC	3 × 400	3 × 400	3 × 400
Nominal current	I	A	1	1	1
Nominal power	P	kW	0,47	0,47	0,47
Environment					
Ambient temperature	$T_{ambient}$	°C	0…+40	0…+40	0…+40
Degree of protection	IP	–	54S	54S	54S

[1] By 100 mm steps

For more information regarding motors and motor adapters, please visit **page 172**

Dimensional drawing

LEMC-A-21xx-..-B054LAA2SN
LEMC-A-21xx-..-B151LAA2SN

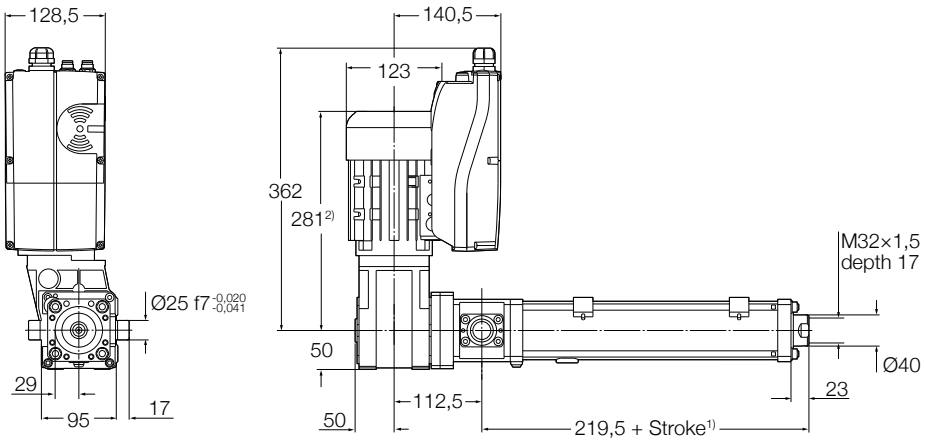

LEMC-A-21xx-..-B319LBA2SN

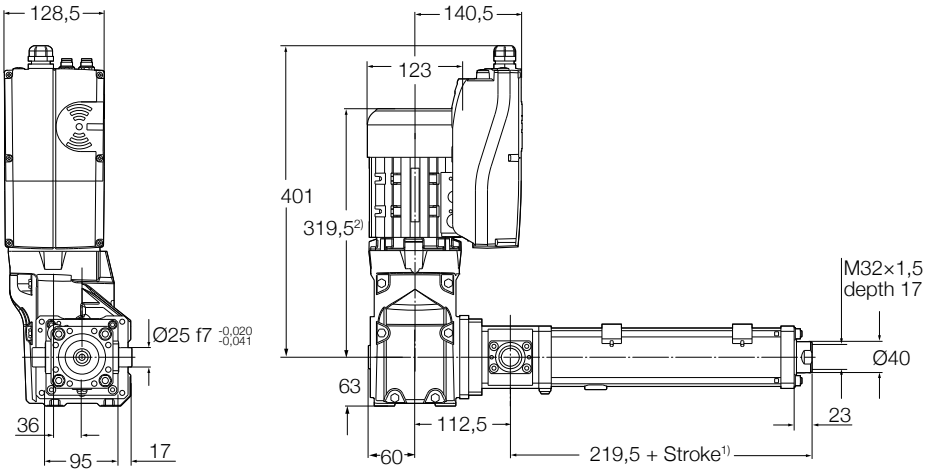

1) Add 30 mm for anti-rotation option
2) Add 40 mm for Brake option

Performance diagrams

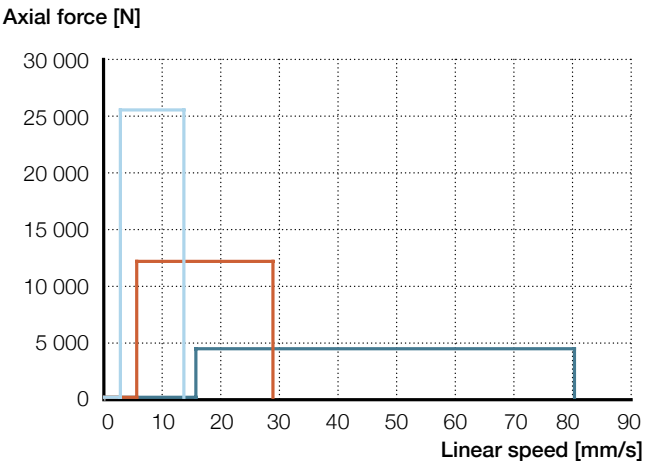

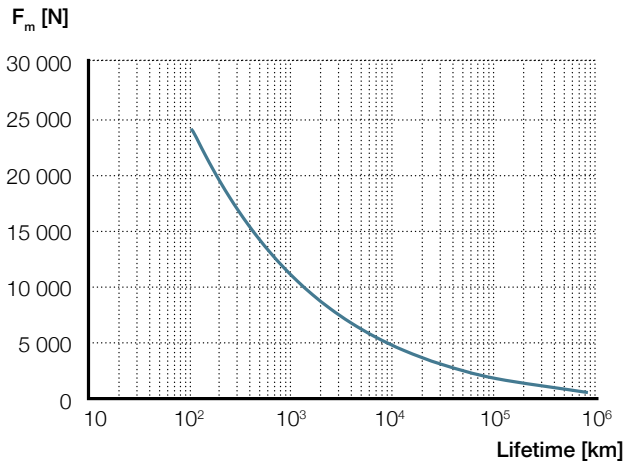

B054LAA2	B151LAA2	B319LBA2
F_{cont}	F_{cont}	F_{cont}

Ordering key

See **page 214**

LEMC-A-2110

Electric cylinder asynchronous motor, parallel configuration

Technical data

Designation	Symbol	Unit	Parallel adapter and asynchronous motor		
			P129	P187	P328
			LBA2	LBA2	LBA2
Performance Data					
Continuous force @ max. speed	F_c	kN	10,3	14,9	26,2
Dynamic load capacity	C	kN	54,3	54,3	54,3
Holding force (motorbrake option)	F_{Hold}	kN	39	40	40
Min. linear speed	v_{min}	mm/s	6,5	4,5	2,5
Max. linear speed	v_{max}	mm/s	33,3	23,0	13,2
Duty cycle	D	%	100	100	100
Mechanical Data					
Screw type	–	–	Roller screw	Roller screw	Roller screw
Screw diameter	d_{screw}	mm	21	21	21
Screw lead	p_{screw}	mm	10	10	10
Lead accuracy			G5	G5	G5
Stroke[1)]	s	mm	100…600	100…600	100…600
Internal overstroke each side	s_0	mm	5	5	5
Backlash	$s_{backlash}$	mm	0,04	0,04	0,04
Gear reduction	i	–	12,992	18,776	32,867
Inertia @ 0 mm stroke	J	10^{-4} kgm²	4,3300	4,1200	3,85
Δ Inertia per 100 mm stroke	ΔJ	10^{-4} kgm²	0,0009	0,0004	0,0001
Inertia of optional brake	J_{brake}	10^{-4} kgm²	0,0150	0,0150	0,015
Weight @ 0 mm stroke	m	kg	20,7	20,7	20,7
Δ weight per 100 mm stroke	Δm	kg	1,15	1,15	1,15
Weight of optional brake	m_{brake}	kg	0,90	0,90	0,90
Weight of anti-rotation	m_{arot0}	kg	0,90	0,90	0,90
Electrical Data					
Motor type	–	–	Asynchronous	Asynchronous	Asynchronous
Nominal voltage	U	V AC	3 × 400	3 × 400	3 × 400
Nominal current	I	A	1	1	1
Nominal power	P	kW	0,47	0,47	0,47
Environment					
Ambient temperature	$T_{ambient}$	°C	0…+40	0…+40	0…+40
Degree of protection	IP	–	54S	54S	54S

[1)] By 100 mm steps

For more information regarding motors and motor adapters, please visit **page 172**

Dimensional drawing

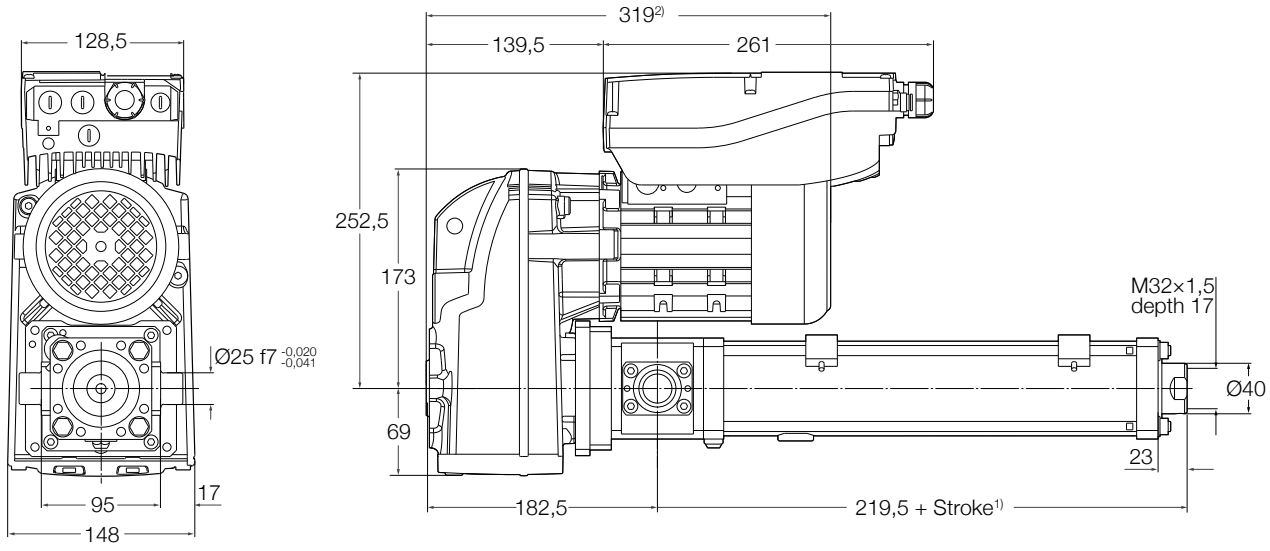

[1)] Add 30 mm for anti-rotation option
[2)] Add 40 mm for Brake option

Performance diagrams

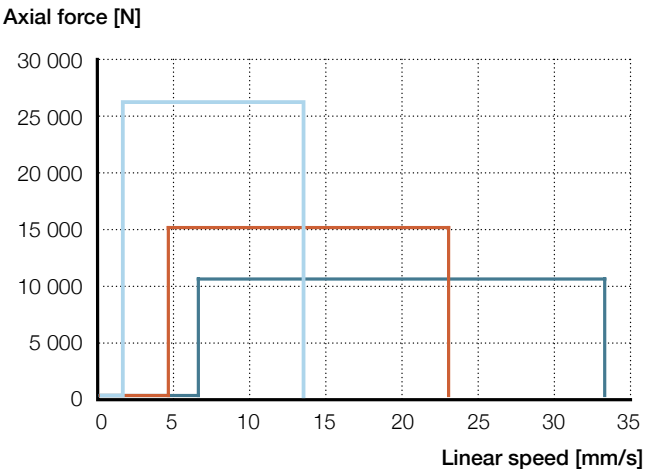

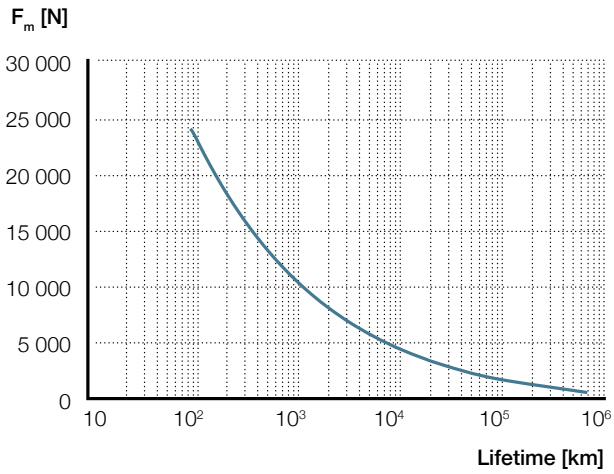

P129LBA2	P187LBA2	B328LBA2
F_{cont}	F_{cont}	F_{cont}

Ordering key

See **page 214**

LEMC-A-3005

Electric cylinder asynchronous motor, L-configuration

Technical data

Designation	Symbol	Unit	L-configuration adapter and asynchronous motor		
			B051	B155	B319
			LBA2	LBA2	LBA2
Performance Data					
Continuous force @ max. speed	F_c	kN	8	24	49,2
Dynamic load capacity	C	kN	106	106	106
Holding force (motorbrake option)	F_{Hold}	kN	32	80	80
Min. linear speed	v_{min}	mm/s	8	2,7	1,3
Max. linear speed	v_{max}	mm/s	41,8	13,9	6,8
Duty cycle	D	%	100	100	100
Mechanical Data					
Screw type	–	–	Roller screw	Roller screw	Roller screw
Screw diameter	d_{screw}	mm	30	30	30
Screw lead	p_{screw}	mm	5	5	5
Lead accuracy			G5	G5	G5
Stroke[1]	s	mm	100…800	100…800	100…800
Internal overstroke each side	s_0	mm	5	5	5
Backlash	$s_{backlash}$	mm	0,02	0,02	0,02
Gear reduction	i	–	5,185	15,556	31,919
Inertia @ 0 mm stroke	J	10^{-4} kgm²	4,68	3,8600	3,7500
Δ Inertia per 100 mm stroke	ΔJ	10^{-4} kgm²	0,0242	0,0027	0,0006
Inertia of optional brake	J_{brake}	10^{-4} kgm²	0,015	0,0150	0,0150
Weight @ 0 mm stroke	m	kg	25,8	25,8	25,8
Δ weight per 100 mm stroke	Δm	kg	2,05	2,05	2,05
Weight of optional brake	m_{brake}	kg	0,90	0,90	0,90
Weight of anti-rotation	m_{arot0}	kg	1,30	1,30	1,30
Electrical Data					
Motor type	–	–	Asynchronous	Asynchronous	Asynchronous
Nominal voltage	U	V AC	3 × 400	3 × 400	3 × 400
Nominal current	I	A	1	1	1
Nominal power	P	kW	0,47	0,47	0,47
Environment					
Ambient temperature	$T_{ambient}$	°C	0…+40	0…+40	0…+40
Degree of protection	IP	–	54S	54S	54S

[1] By 100 mm steps

For more information regarding motors and motor adapters, please visit **page 172**

Dimensional drawing

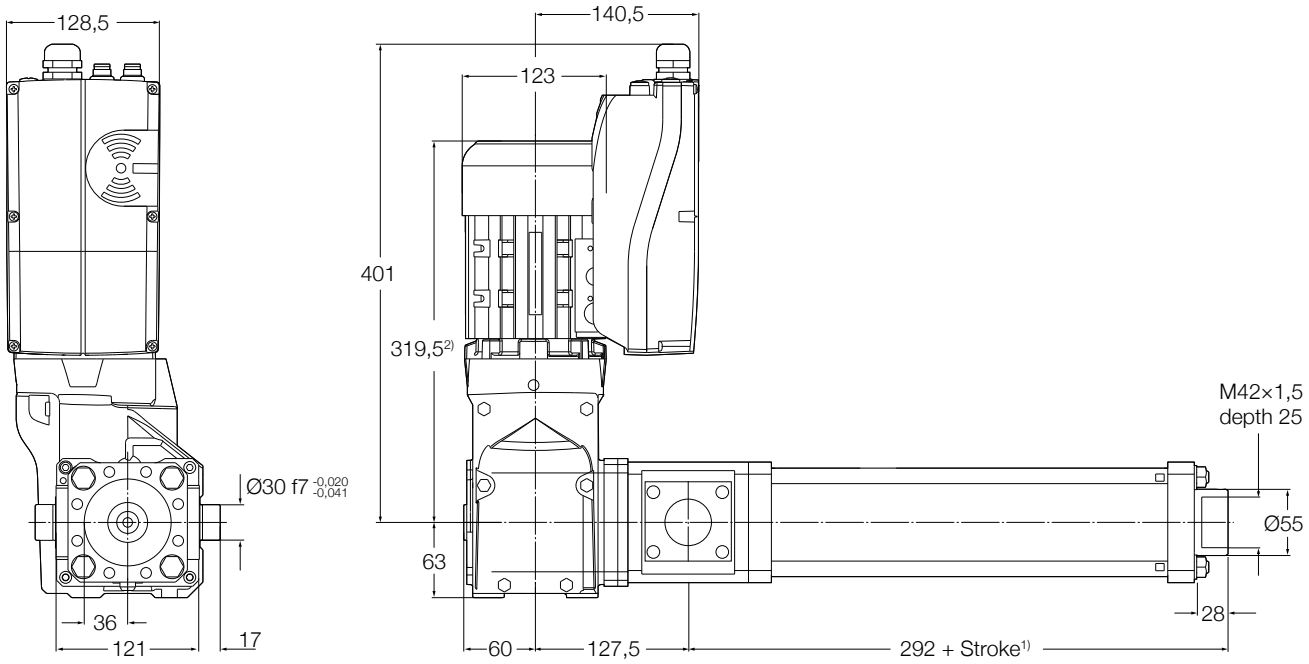

[1)] Add 30 mm for anti-rotation option
[2)] Add 40 mm for Brake option

Performance diagrams

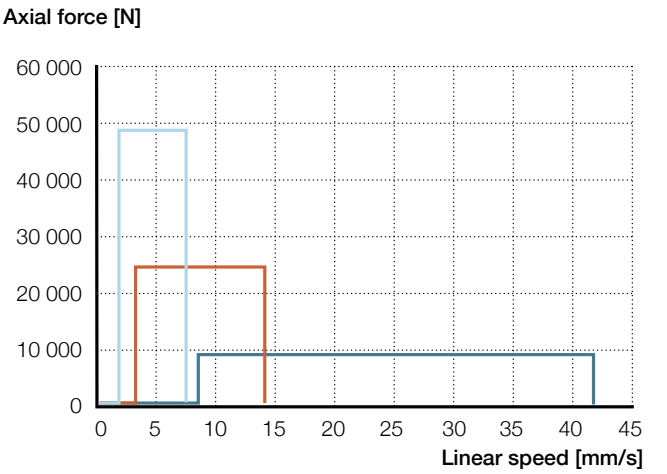

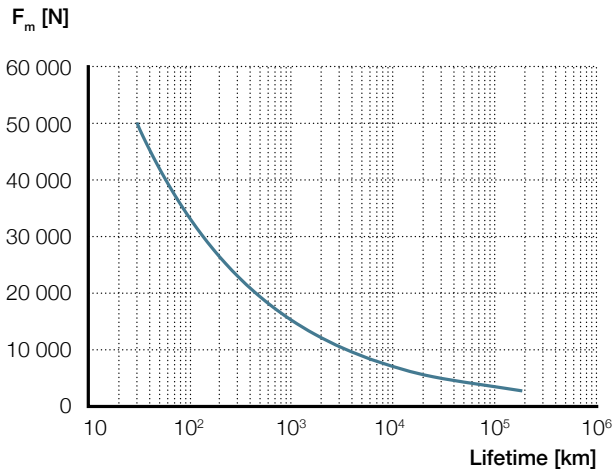

B051LBA2	B155LBA2	B319LBA2
F_{cont}	F_{cont}	F_{cont}

Ordering key

See **page 214**

LEMC-A-3005

Electric cylinder asynchronous motor, parallel configuration

Technical data

Designation	Symbol	Unit	Parallel adapter and asynchronous motor		
			P129	P187	P328
			LBA2	LBA2	LBA2
Performance Data					
Continuous force @ max. speed	F_c	kN	20	29	50,7
Dynamic load capacity	C	kN	106	106	106
Holding force (motorbrake option)	F_{Hold}	kN	80	80	80
Min. linear speed	v_{min}	mm/s	3,3	2,3	1,3
Max. linear speed	v_{max}	mm/s	16,7	11,5	6,6
Duty cycle	D	%	100	100	100
Mechanical Data					
Screw type	–	–	Roller screw	Roller screw	Roller screw
Screw diameter	d_{screw}	mm	30	30	30
Screw lead	p_{screw}	mm	5	5	5
Lead accuracy			G5	G5	G5
Stroke[1]	s	mm	100…800	100…800	100…800
Internal overstroke each side	s_0	mm	5	5	5
Backlash	$s_{backlash}$	mm	0,02	0,02	0,02
Gear reduction	i	–	12,992	18,776	32,867
Inertia @ 0 mm stroke	J	10^{-4} kgm²	4,3500	4,1300	3,8500
Δ Inertia per 100 mm stroke	ΔJ	10^{-4} kgm²	0,0039	0,0018	0,0006
Inertia of optional brake	J_{brake}	10^{-4} kgm²	0,0150	0,0150	0,0150
Weight @ 0 mm stroke	m	kg	27,8	27,8	27,8
Δ weight per 100 mm stroke	Δm	kg	2,05	2,05	2,05
Weight of optional brake	m_{brake}	kg	0,90	0,90	0,90
Weight of anti-rotation	m_{arot0}	kg	1,30	1,30	1,30
Electrical Data					
Motor type	–	–	Asynchronous	Asynchronous	Asynchronous
Nominal voltage	U	V AC	3 × 400	3 × 400	3 × 400
Nominal current	I	A	1	1	1
Nominal power	P	kW	0,47	0,47	0,47
Environment					
Ambient temperature	$T_{ambient}$	°C	0…+40	0…+40	0…+40
Degree of protection	IP	–	54S	54S	54S

[1] By 100 mm steps

For more information regarding motors and motor adapters, please visit **page 172**

Dimensional drawing

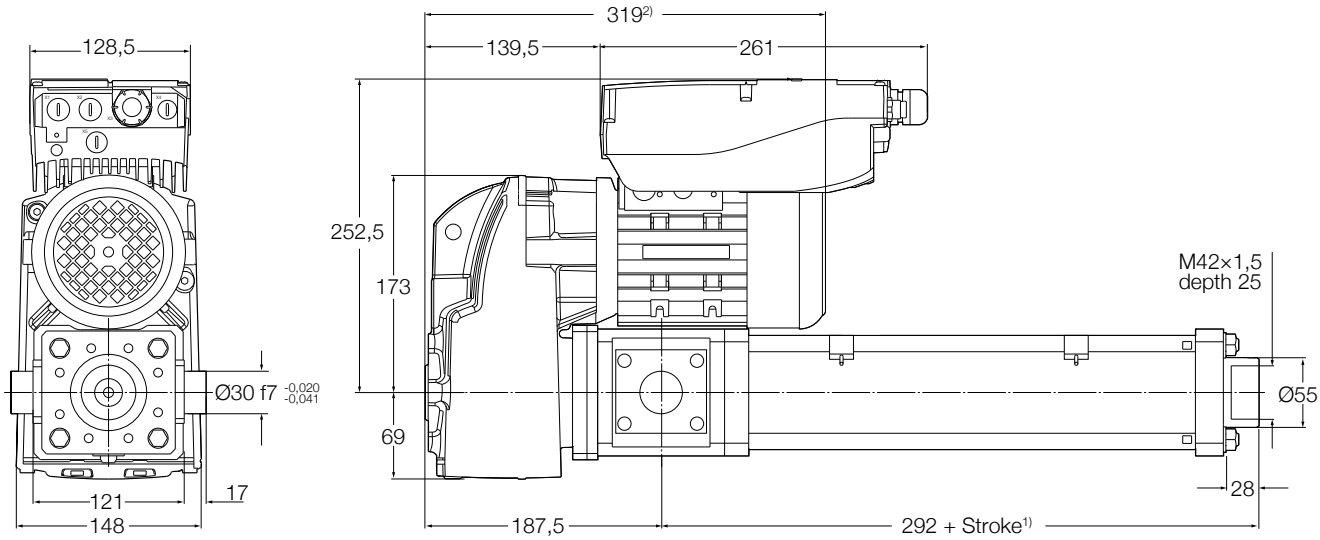

[1)] Add 30 mm for anti-rotation option
[2)] Add 40 mm for Brake option

Performance diagrams

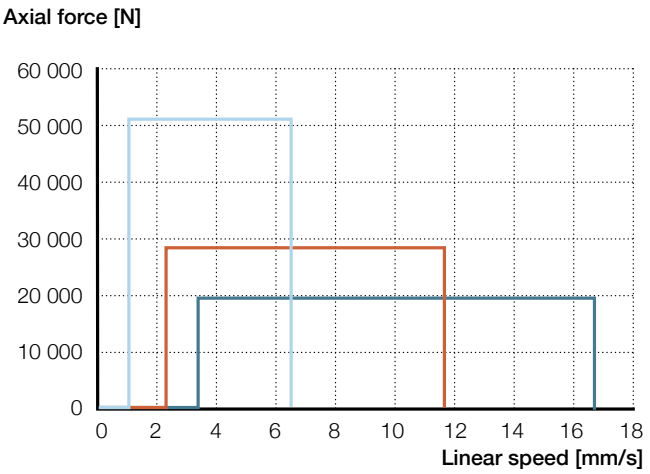

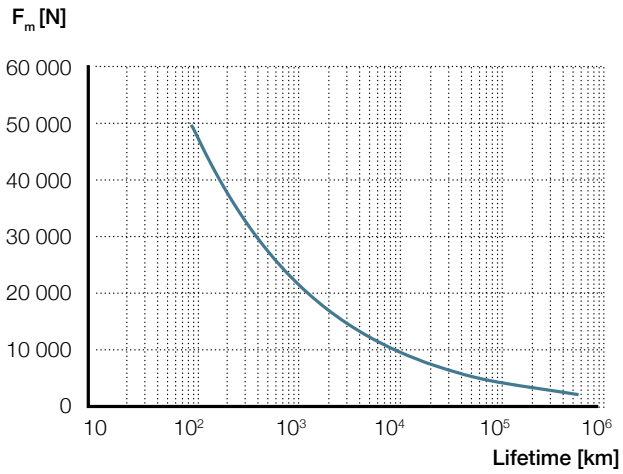

P129LBA2	P187LBA2	P328LBA2
F_{cont}	F_{cont}	F_{cont}

Ordering key

See **page 214**

Mounting positions

Parallel adapter and motor

A

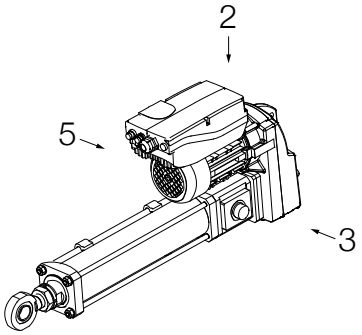

B

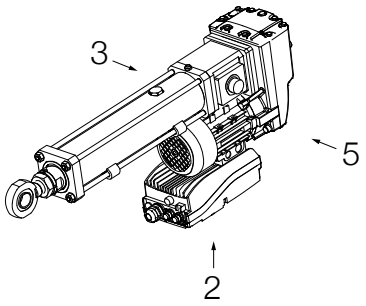

C

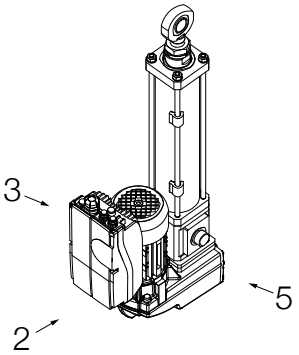

D

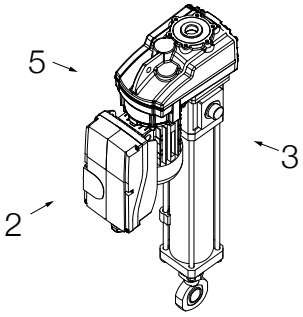

E

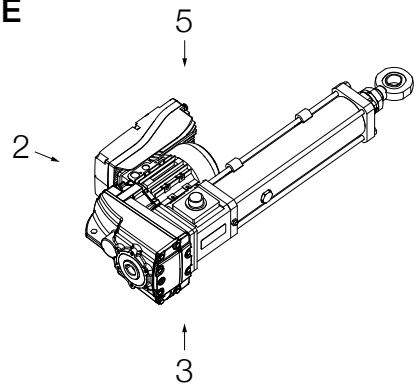

F

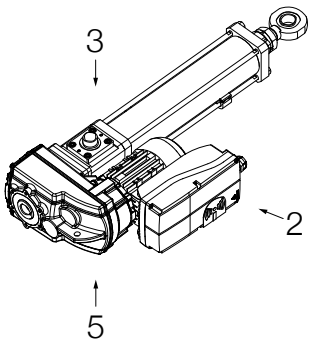

L-configuration and motor

A

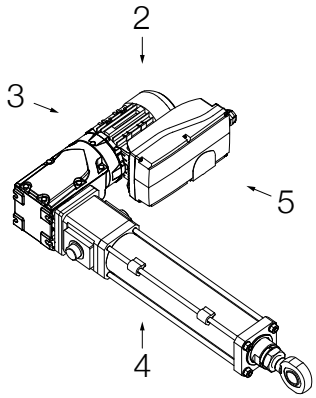

B

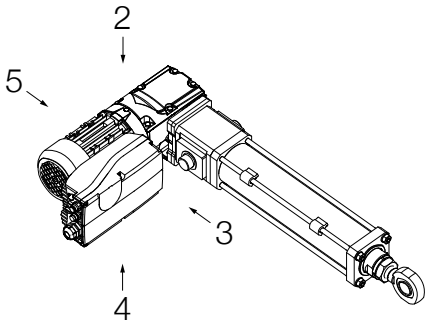

C

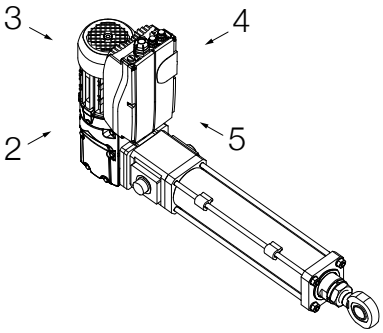

D

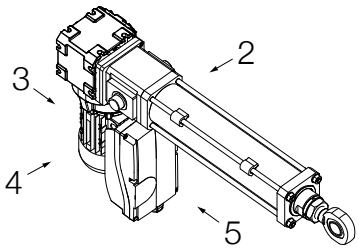

E

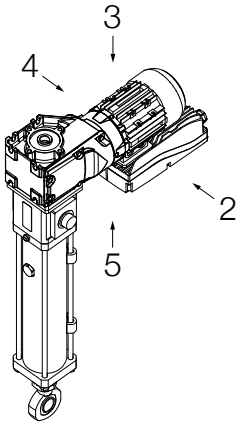

F

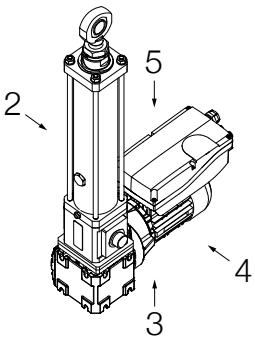

Ordering key

Actuators with asynchronous motors

L E M C - A - 2 1 0 5 - 0 1 0 0 - T R A F 1 - P 1 2 9 L B A 2 S N B A 2

Asynchronous motor

Screw diameter

Screw lead

Stroke

Rear attachment
T Trunnions
F Front plate
B Back plate
N No attachment

Front attachment
M Male attachment
N No attachment (female thread)
R Rod end

Tube options
N No anti-rotation with standard sealing
S No anti-rotation with improved sealing (metallic scraper)
A Anti-rotation

Limit switches
F 2 limit switches and 1 home switch
S 2 limit switches only
M 1 limit switch and 1 home switch
L 1 limit switch only
H Home switch only
N No switch

Grease
1 Standard grease
2 Food grade grease
3 High load grease capacity
4 Short move grase capacity

Interface and gear ratio
See **page 172** – Table: Performance overview of actuators with asynchronous motors

Motor selection
See **page 172** – Table: Performance overview of actuators with asynchronous motors

Smart motor
S Smart asynchronous motor

Feedback
N No feedback

EM brake
B Standard EM brake
M Manual release brake
N No brake

Motor mounting position
See **pages 212** and **213**

Accessories

Limit/Home switches

Sensor type: magnetic
Technology: DC PNP

Limit switch to output: normally closed
Home switch output: normally open

Supply voltage (V DC): 24 V
Consumption (mA): < 10 (under 24 V DC)
Max current output (mA): 100
Connection: M8×1 plug
Cable lenghth PUR 0,3 m

The location of the home and limit switches can be adjusted easily on the linear unit.

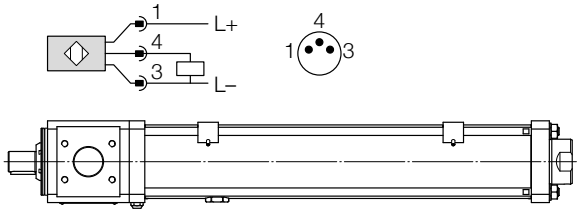

Electric cylinders CEMC

Features

- Very compact, fully integrated design
- Inverted roller screw
- Lightweight material
- Highly efficient
- High-resolution position feedback system
- High-speed and acceleration capabilities
- Low maintenance requirements
- High quality components

Benefits

- Saves space
- Very high load capabilities compared to actuators with similar dimensions
- Enables for higher acceleration and higher speed of the robot arm
- Reduces energy consumption by 90% compared to pneumatic solutions
- Better quality through greater control of the process
- Faster production cycles
- Low noise

Product description

The CEMC actuators incorporate the planetary inverted roller screw technology that allows integration of hollow shaft motor directly on the roller screw nut, resulting in a very compact yet powerful solution. Besides dimensions, this design also minimize inertia, thus allowing excellent control, responsive performance, significantly improved cycle time, and high productivity.

This product range provides high power density in a small package, with approximately 50% shorter length than any typical electromechanical cylinder. They are an ideal solution when compactness and power density are needed to replace fluid powered cylinders. Moreover there is the added advantage of reduced weight, an important feature for robot arms installations.

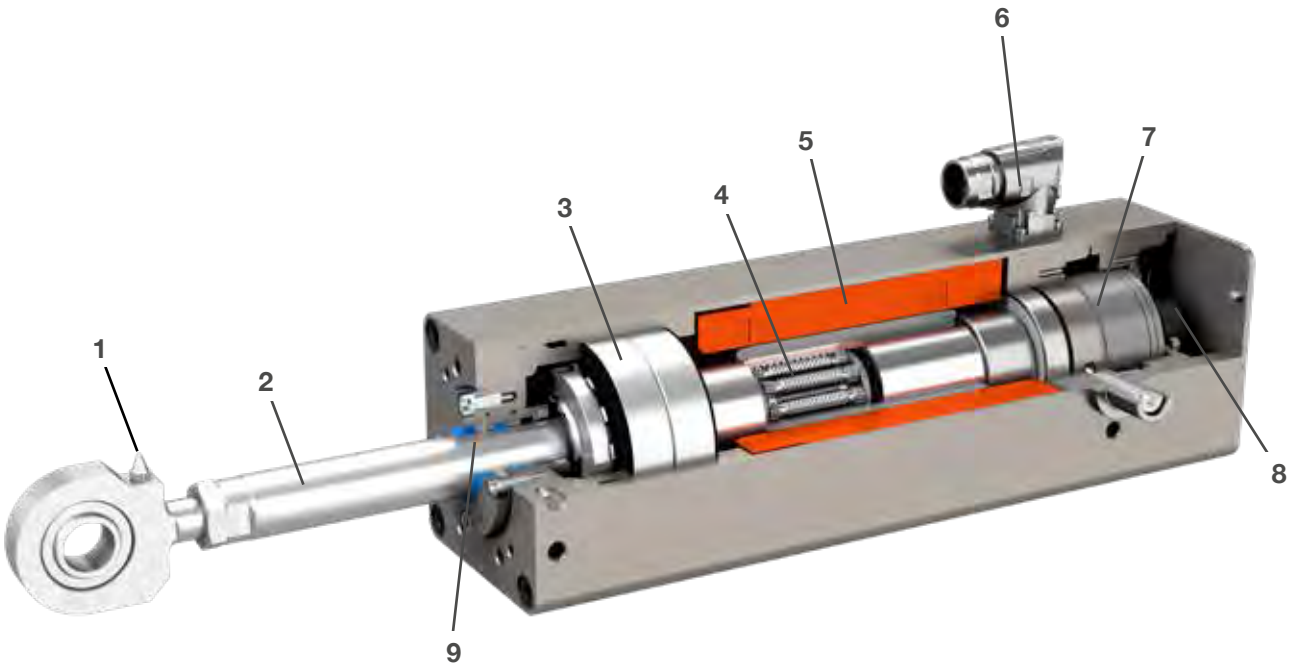

1. Lubrication nipple
2. Push tube
3. High quality angular contact ball bearings
4. High quality planetary inverted roller screw for highest axial load rating, low axial play and high efficiency
5. Integrated hollow shaft servo motor
6. Motor connectors
7. Fail safe brake option
8. Position feedback options for compatibility with main brands of robots/controllers
9. Scraper seal to keep contamination out

Automotive industry

The automotive industry uses a large quantity of industrial robots with an average of 300 welding robots per production line. The CEMC is the best solution to meet the quality standards, performance requirements and energy savings.

With 20 years of automotive experience, the next generation CEMC anticipates future market requirements by offering multiple configurations to fit customer needs and to provide the best performances on the field. Upcoming options such as integrated anti-rotation and embedded IoT-ready sensors will further improve equipment performance and productivity.

CEMC feedback

CEMC next generation is available with different types of position feedback sensors, to ensure the compatibility with main robot and drive manufacturers.

Key benefits for spot welding

	Value	vs previous generation
Highest number of welding spots	> 20 million spots	+100 %
Lightweight construction to reduce welding robot power and size	12,5 kg	–10 %
High reliability to minimize downtime	10 million spots without relubrication	+500 %
Modularity with various feedback options	336 configurations	Limited feedback options

Manuals

Supporting documents are available for downloading on ewellix.com

3D models

Product configurators for 3D models download are available on ewellix.com

Operating manual

3D model configurator

CEMC-2105

Natural convection cooling

Technical data

Designation	Symbol	Unit	A3N	B3N	A5N	B5N
Performance data						
Continuous force @ zero speed	F_{c0}	kN	6,9	6,8	10,4	10,4
Peak force @ zero speed	F_{p0}	kN	14,0	13,7	25	25
Dynamic load capacity	C	kN	59	59	59	59
Holding force (motorbrake option)	F_{hold}	kN	15,8	15,8	15,8	15,8
Max linear speed	v_{max}	mm/s	300	300	300	300
Max linear acceleration	a_{max}	m/s^2	7	7	7	7
Duty cycle	D	%	100	100	100	100
Mechanical data						
Screw type	–	–	IRS	IRS	IRS	IRS
Screw diameter	d_{screw}	mm	21	21	21	21
Screw lead	p_{screw}	mm	5	5	5	5
Lead accuracy	–	–	G5	G5	G5	G5
Stroke	s	mm	180	180	180	180
Internal overstroke each side	s_0	mm	1	1	1	1
Backlash	$s_{backlash}$	mm	0,04	0,04	0,04	0,04
Gear reduction	i	–	1	1	1	1
Inertia	J	10^{-4} kgm^2	8	8	8	8
Inertia of optional brake	J_{brake}	10^{-4} kgm^2	0,6	0,6	0,6	0,6
Weight	m	kg	11,5	11,5	12,3	12,3
Weight of optional brake	m_{brake}	kg	1,4	1,4	1,4	1,4
Electrical data						
Motor type	–	–	servo	servo	servo	servo
Drive voltage supply (nominal)	U	V_{AC}	400	230	400	230
DC bus voltage supply (minimum)	U	V_{DC}	540	325	540	325
Nominal speed	n_{nom}	rpm	3 600	3 430	3 485	3 600
Max speed	n_{max}	rpm	3 600	3 600	3 600	3 600
Nominal torque @ slow speed[1) 3)]	T_{c0}	Nm	7,8	7,7	11,8	11,8
Nominal current @ slow speed[1) 3)]	I_0	A_{rms}	5,1	8	7,3	12,5
Peak torque @ slow speed[1) 3)]	T_{p0}	Nm	15,9	15,6	28,4	28,4
Peak current @ slow speed[1) 3)]	I_{peak}	A_{rms}	11	17	19	32
Nominal power	P	kW	2,7	2,6	3,9	4,0
Torque constant (K_t at 25 °C)[4)]	K_t	Nm/A_{rms}	1,67	1,06	1,76	1,02
Back emf constant at 1 000 rpm (K_e at 25 °C)[2)]	K_e	V_{rms}	101,0	64,0	106,6	61,7
Winding resistance (at 20 °C)[2)]	R	Ω	4,33	1,74	2,41	0,81
Winding inductance (at 20 °C)[2)]	L	mH	14,97	6	10,01	3,35
Water flow (max pressure 5 bars)	–	l/mn	–	–	–	–
Water temperature	–	°C	–	–	–	–
Pole number	–	–	8	8	8	8
Insulation class	–	–	H	H	H	H
Thermoswitch	–	–	Yes	Yes	Yes	Yes
Temperature sensor	–	–	PT1000	PT1000	PT1000	PT1000
Environment						
Ambient temperature	$T_{ambient}$	°C	0…+40	0…+40	0…+40	0…+40
Degree of protection	IP	–	54S	54S	54S	54S

[1)] Slow speed: < 1 % max actuator speed
[2)] Phase to phase
[3)] Values valid for a ΔT of 90 °C
[4)] Tolerance on value: +/–10 %

Dimensional drawing

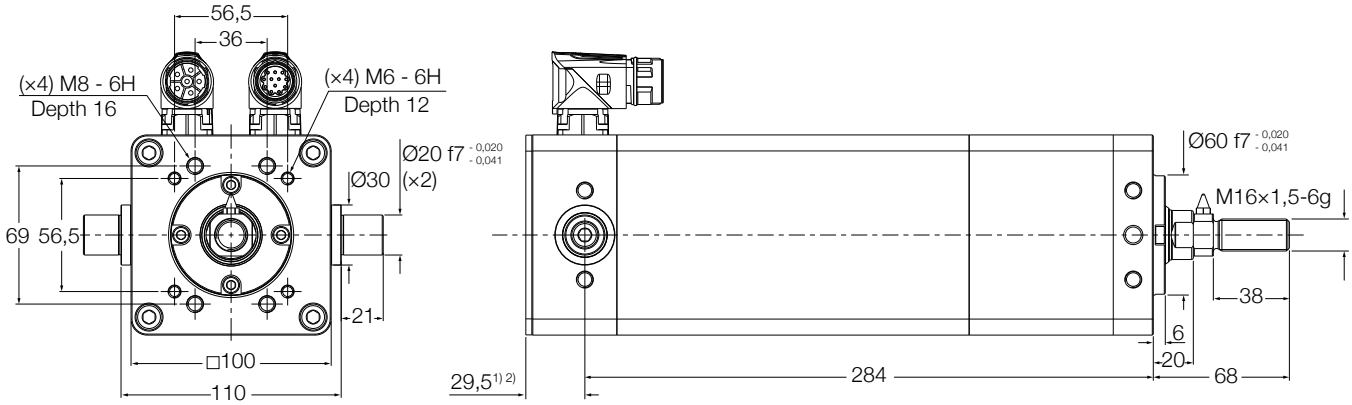

1) For brake option, add 44 mm
2) Additional length varies depending on the type of feedback device: for R1 and R2 is 29.5 mm as shown, for S1 add 20 mm and for H1 add 39 mm
NOTE: For other feedback options, please contact Ewellix.

Performance diagrams

×3N Axial force [kN]

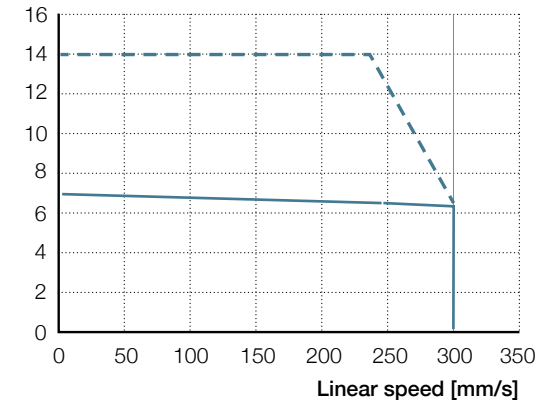

F_{cont} F_{peak}

×5N Axial force [kN]

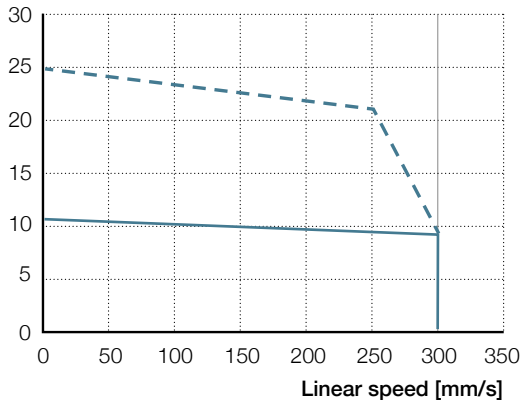

F_{cont} F_{peak}

Lifetime diagram

Fm [N]

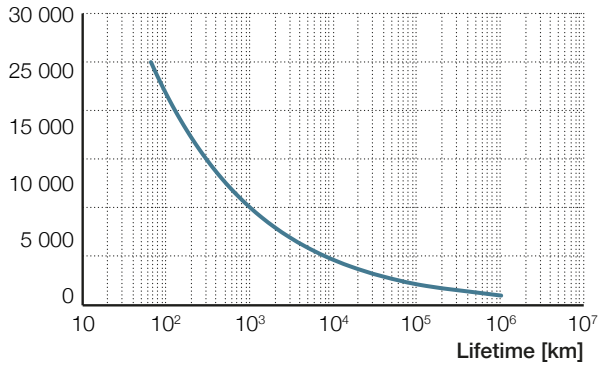

NOTE:
This curve shows standard L10 fatigue calculation, with a mean load over a double stroke cycle.
For applications like spot welding or servo press, where a peak force is applied over a very short stroke (shorter than twice the pitch of the roller screw), standard L10 fatigue calculation is not representative of the reachable life in operation. In these cases, please contact Ewellix for a dedicated service life calculation.

Ordering key

See **page 228**

CEMC-2105

Water cooling

Technical data

Designation	Symbol	Unit	A3W	B3W	A5W	B5W
Performance data						
Continuous force @ zero speed	F_{c0}	kN	10,3	10,3	18,2	18,4
Peak force @ zero speed	F_{p0}	kN	20,1	20,1	25	25
Dynamic load capacity	C	kN	59	59	59	59
Holding force (motorbrake option)	F_{hold}	kN	15,8	15,8	15,8	15,8
Max linear speed	v_{max}	mm/s	300	300	300	300
Max linear acceleration	a_{max}	m/s^2	7	7	7	7
Duty cycle	D	%	100	100	100	100
Mechanical data						
Screw type	–	–	IRS	IRS	IRS	IRS
Screw diameter	d_{screw}	mm	21	21	21	21
Screw lead	p_{screw}	mm	5	5	5	5
Lead accuracy	–	–	G5	G5	G5	G5
Stroke	s	mm	180	180	180	180
Internal overstroke each side	s_0	mm	1	1	1	1
Backlash	$s_{backlash}$	mm	0,04	0,04	0,04	0,04
Gear reduction	i	–	1	1	1	1
Inertia	J	10^{-4} kgm^2	8	8	8	8
Inertia of optional brake	J_{brake}	10^{-4} kgm^2	0,6	0,6	0,6	0,6
Weight	m	kg	13,1	13,1	13,9	13,9
Weight of optional brake	m_{brake}	kg	1,4	1,4	1,4	1,4
Electrical data						
Motor type	–	–	servo	servo	servo	servo
Drive voltage supply (nominal)	U	V_{AC}	400	230	400	230
DC bus voltage supply (minimum)	U	V_{DC}	540	325	540	325
Nominal speed	n_{nom}	rpm	3 275	3 110	3 090	3 230
Max speed	n_{max}	rpm	3 600	3 600	3 600	3 600
Nominal torque @ slow speed[1) 3)]	T_{c0}	Nm	11,7	11,7	20,7	20,9
Nominal current @ slow speed[1) 3)]	I_0	A_{rms}	7,8	12,3	13,2	23,1
Peak torque @ slow speed[1) 3)]	T_{p0}	Nm	22,8	22,8	28,4	28,4
Peak current @ slow speed[1) 3)]	I_{peak}	A_{rms}	18	28	19	32
Nominal power	P	kW	4,0	3,8	6,6	7,0
Torque constant (K_t at 25 °C)[4)]	K_t	Nm/A_{rms}	1,67	1,06	1,76	1,02
Back emf constant at 1 000 rpm (K_e at 25 °C)[2)]	K_e	V_{rms}	101,0	64,0	106,6	61,7
Winding resistance (at 20 °C)[2)]	R	Ω	4,33	1,74	2,41	0,81
Winding inductance (at 20 °C)[2)]	L	mH	14,97	6	10,01	3,35
Water flow (max pressure 5 bars)	–	l/mn	2	2	2	2
Water temperature	–	°C	20…30	20…30	20…30	20…30
Pole number	–	–	8	8	8	8
Insulation class	–	–	H	H	H	H
Thermoswitch	–	–	Yes	Yes	Yes	Yes
Temperature sensor	–	–	PT1000	PT1000	PT1000	PT1000
Environment						
Ambient temperature	$T_{ambient}$	°C	0…+40	0…+40	0…+40	0…+40
Degree of protection	IP	–	54S	54S	54S	54S

[1)] Slow speed: < 1 % max actuator speed
[2)] Phase to phase
[3)] Values valid for a ΔT of 90 °C
[4)] Tolerance on value: +/– 10 %

Dimensional drawing

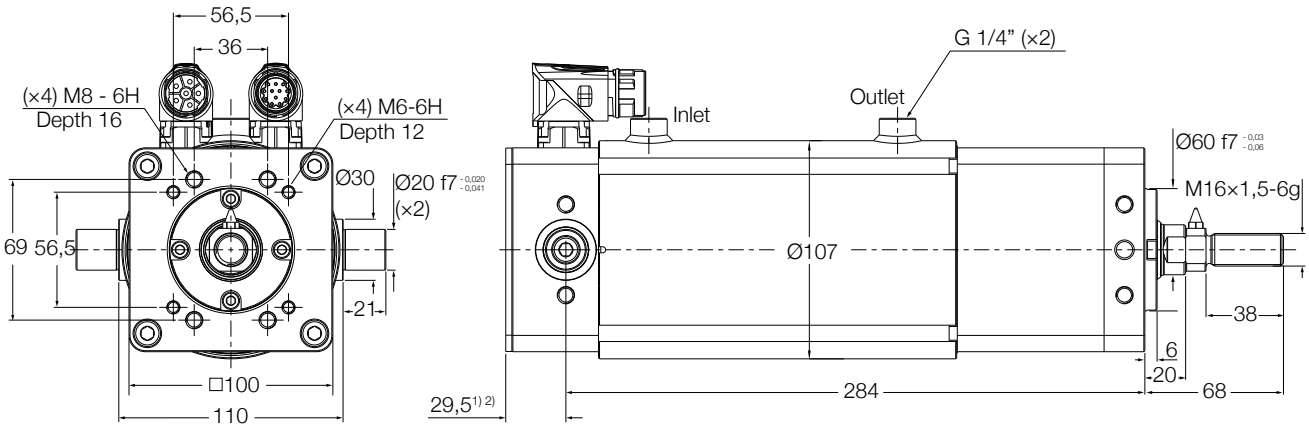

[1)] For brake option, add 44 mm
[2)] Additional length varies depending on the type of feedback device: for R1 and R2 is 29.5 mm as shown, for S1 add 20 mm and for H1 add 39 mm
NOTE: For other feedback options, please contact Ewellix.

Performance diagrams

×3N Axial force [kN]

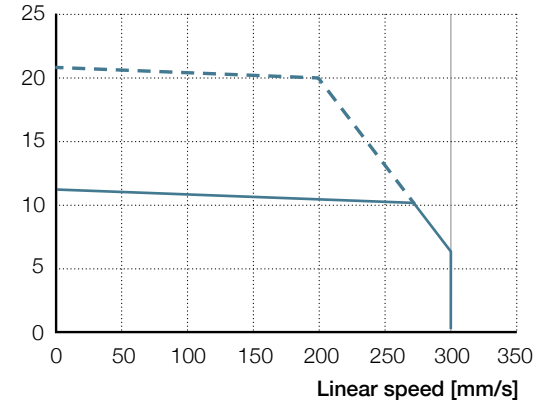

F_{cont} F_{peak}

×5N Axial force [kN]

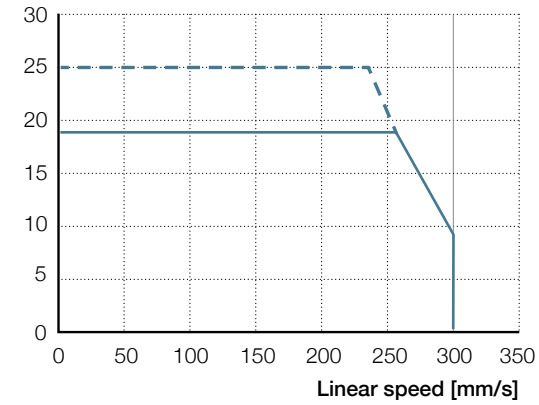

F_{cont} F_{peak}

Lifetime diagram

Fm [N]

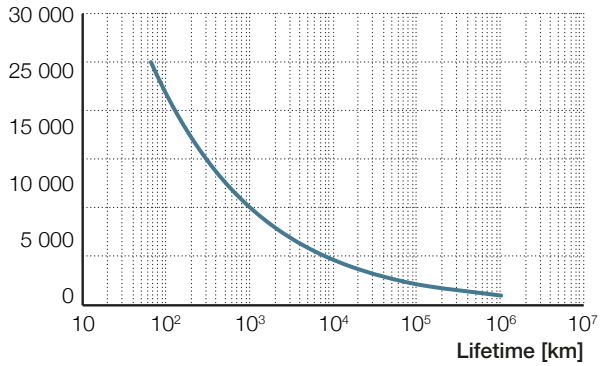

NOTE:
This curve shows standard L10 fatigue calculation, with a mean load over a double stroke cycle.
For applications like spot welding or servo press, where a peak force is applied over a very short stroke (shorter than twice the pitch of the roller screw), standard L10 fatigue calculation is not representative of the reachable life in operation. In these cases, please contact Ewellix for a dedicated service life calculation.

Ordering key

See **page 228**

Feedback range on CEMC

Drive compatibility

Robot or drive manufacturer	Resolver Tamagawa (R1)	Resolver LTN (R2)	Absolute encoder Sick-Stegmann (S1)	Absolute encoder Heidenhain (H1)	Absolute encoder Fanuc (F1)	Absolute encoder Yaskawa (Y1)
Lenze (L1)	L1R1	L1R2	L1S1	L1H1	–	–
Siemens (S1)	S1R1	S1R2	S1S1	S1H1	–	–
Kuka (K1)	K1R1	–	–	–	–	–
Comau (C1)	C1R1	–	–	–	–	–
ABB (A1)	–	A1R2	–	–	–	–
Fanuc (F1)	–	–	–	–	F1F1	–
Yaskawa (Y1)	–	–	–	–	–	Y1Y1
Parker (P1)	P1R1	P1R2	P1S1	P1H1	–	–

NOTE: The table above show hardware drive compatibility with Ewellix CEMC.
For other drive manufacturer not listed above, please contact Ewellix.

Feedback list and references

R1	Standard resolver from Tamagawa - Size 15, two pole resolver
R2	Standard resolver from LTN - Size 15, two pole resolver
S1	Multi turn absolute encoder from Sick Stegmann - SKM36 reference, 128 signe/cosine periods per revolution, with Hiperface® protocol interface
H1	Multi turn absolute encoder from Heidenhain - EQN1325 reference, 2048 pulses per turn, with EnDat2.2/01 protocol interface
F1	Multi turn absolute encoder from Fanuc - Alpha iAR128 reference
Y1	Multi turn absolute encoder from Yaskawa

NOTE: for any additional information, please refer to feedback device manufacturer datasheet.

Brake option, technical specification

Permanent magnet brake technology	–	–
Nominal power (at 20 °C)	W	18
Standard supply	VDC	24 (–10 % / +6 %)
Optional supply	VDC	90 (–10 % / +6 %)
Holding torque (at 20 °C)	Nm	9
Holding torque (at 100 °C)	Nm	8
Brake engage/disengage time (typical) *	ms	7/40

[1] The stated switching times are achieved with nominal air gap.
These are average, whose dispersion depends on the power supply and coil temperature.

CEMC connectors definition

Standard power connector, valid for all type of resolver, and S1-H1 encoder

Intercontec BEDC106 MR 14 00 1216

Standard feedback M23 connector 6 pins	R1-R2-S1-H1 Data/signal
1	U
2	V
3	PE
4	**Brake +**
5	**Brake –**
6	W
Housing	Shield

Optional

NOTE: For more information, please visit the site: www.intercontec.biz/en.html

Standard feedback connector valid for resolvers, S1 and H1 encoders

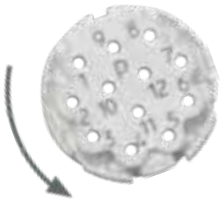

Intercontec AEDC110 MR 04 00 1215 (insert at 20°)

Standard feedback M23 connector 12 pins	**R1** Data/signal
1	Sin (S2)
2	Sin (S4)
3	–
4	–
5	–
6	–
7	Err + (R1)
8	PT1000
9	PT1000
10	Err – (R2)
11	Cos (S1)
12	Cos (S3)
Housing	Shield

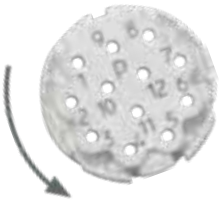

Intercontec AEDC110 MR 04 00 1215 (insert at 20°)

Feedback option M23 connector 12 pins	**R2** Data/signal
1	Sin (S2)
2	Sin (S4)
3	–
4	–
5	–
6	–
7	Err + (R1)
8	PT1000
9	PT1000
10	Err – (R2)
11	Cos (S3)
12	Cos (S1)
Housing	Shield

Intercontec AEDC110 MR 04 00 1215 (insert at 20°)

Feedback option M23 connector 12 pins	**S1** Data/signal
1	Sin +
2	Sin –
3	VCC (+8V)
4	GND (VCC)
5	–
6	–
7	Datafbk +
8	PT1000
9	PT1000
10	Datafbk –
11	Cos +
12	Cos –
Housing	Shield

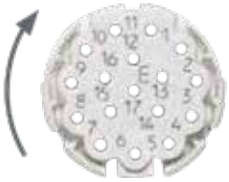

Intercontec AEDC139 MR 04 00 1215 (insert at 0°)

Feedback option M23 connector 17 pins	**H1** Data/signal
1	Sensor Up
2	–
3	–
4	Sensor 0V
5	PT1000
6	PT1000
7	Up
8	Clock
9	$\overline{\text{Clock}}$
10	0V
11	–
12	B +
13	B –
14	Data
15	A +
16	A –
17	$\overline{\text{Data}}$
Housing	Shield

NOTE:
For F1 (Fanuc encoder) and Y1 (Yaskawa) please contact Ewellix for more information.
For more information, please visit the site: www.intercontec.biz/en.html

Drive options

The performance attributes shown in the tables on the previous pages are the result of a specific Lenze servodrive combinations with the CEMC and integrated Ewellix motor.

The CEMC can be offered with or without the servodrive. The servodrive can be in the recommended configuration or any other configuration that fits your installation with various fieldbus communication for instance (↳ **table 1**).

Standard motors used by Ewellix is powered with 3 × 400VAC drive voltage supply. In consequence standard configurations with Lenze servodrive are with Axx motor type and winding.

Please refer to the ordering key (↳ **page 228** and **229**).

Table 1

Linear unit	Motor reference	Lenze drive ref.
CEMC2105-180-…	A3N	E94ASHE0074
CEMC2105-180-…	A5N	E94ASHE0134
CEMC2105-180-…	A3W	E94ASHE0134
CEMC2105-180-…	A5W	E94ASHE0174

NOTE: Please refer to Lenze documentation for more information. http://www.lenze.com/en-us/products/inverters

Optional front and rear attachment drawings

Female thread

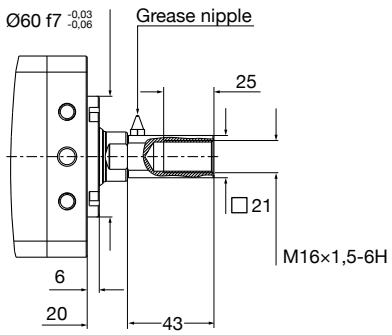

Rod end

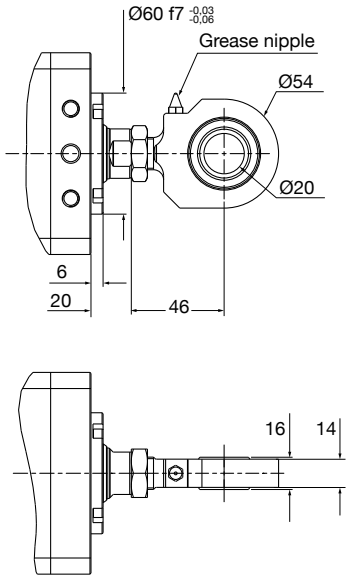

Back clevis

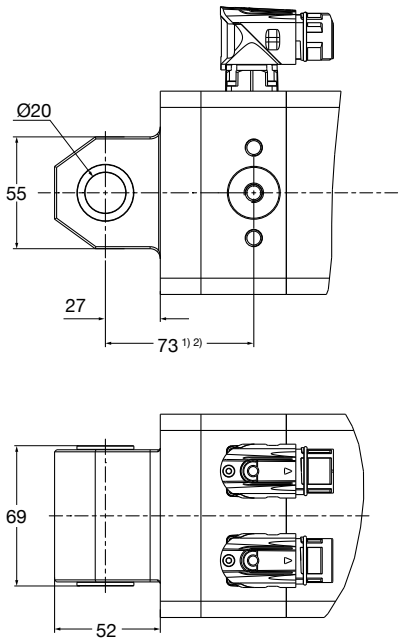

[1] For brake option, add 44 mm
[2] Additional length varies depending on the type of feedback device: for R1, R2 and S1 is 73 mm as shown, and for H1 add 25 mm

NOTE: For other feedback options, please contact Ewellix.

Optional anti-rotation drawing

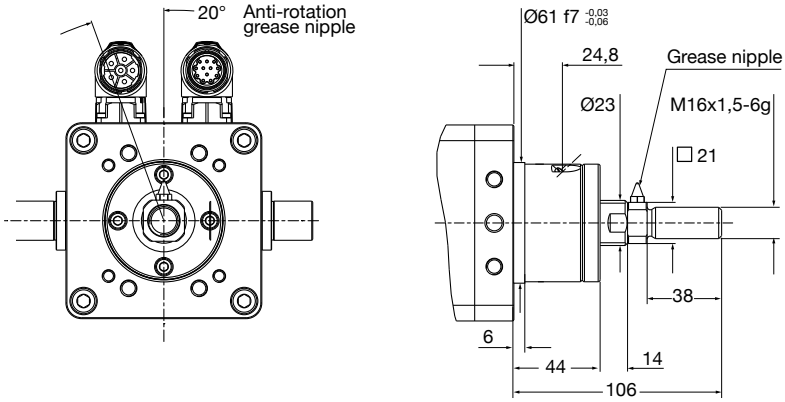

NOTE: With anti-rotation option, please consider an added weight of 0,7 kg to the linear unit.

Ordering key

Linear units

C E M C 2 1 0 5 - 1 8 0 - ☐☐☐ - ☐☐☐ - ☐☐☐☐☐☐ - ☐☐☐ - 0 0

Type
CEMC

Screw diameter
21 mm

Screw lead
5 mm

Stroke
180 mm

Attachment
Body/rear attachment

F	front
T	trunnions
B	back clevis
(Z)	(customized)

Front attachment

R	rod end
M	male thread
F	female thread
(Z)	(customized)

Anti-rotation

N	without anti-rotation
A	with anti-rotation

Motor
DC voltage supply

A	540 VDC
B	325 VDC[1]

Number of stacks motor

3	3 stacks motor
5	5 stacks motor

Cooling option

N	natural cooling
W	water cooling

Brake option

N	no brake
B	standard brake 24 VDC supply
D	brake 90 VDC supply

[1] Available on request. Please contact Ewellix.

C E M C 2 1 0 5 - 1 8 0 - ___ - ___ - ___ - ___ - 0 0

Drive manufacturer and family

L1	Lenze 9400
S1	Siemens Sinamics S120
K1	Kuka
C1	Comau
A1	ABB
F1	Fanuc
Y1	Yaskawa
P1	Parker Compax3

If other drive used, please contact Ewellix for coding

Feedback

R1	Standard resolver (Tamagawa)
R2	Resolver (LTN)
S1	Sick absolute encoder
H1	Heidenhain absolute encoder
F1	Fanuc absolute encoder [1]
Y1	Absolute encoder compliant to Yaskawa specification [1]

Free coding (options)

Motor drive (only valid if L1 selected previously)

Y	Drive included
N	No drive

Power and signal cables

1	5 m
2	10 m
3	15 m
4	20 m
N	no cable

Drive fieldbus

A	CanOpen
B	Devicenet
C	Ethercat
D	Ethernet
E	Powerlink MN/CN
F	Powerlink CN
G	Profibus
H	Profinet
N	No fieldbus

Customization code

For a complete system with Lenze servodrive (valid only with -Axx- motor range), please select options as shown in red in ordering key. If no Lenze servodrive requested, please indicate only -NNN-. See example below.

Example

Linear unit only

CEMC2105-180-TRN-A5N-BA1R2x-NNN-00

Complete system, with actuator + Lenze servodrive:

CEMC2105-180-TRN-A5N-BL1R1x-Y2G-00

[1] Available on request. Please contact Ewellix.

Electric cylinders SRSA and SVSA

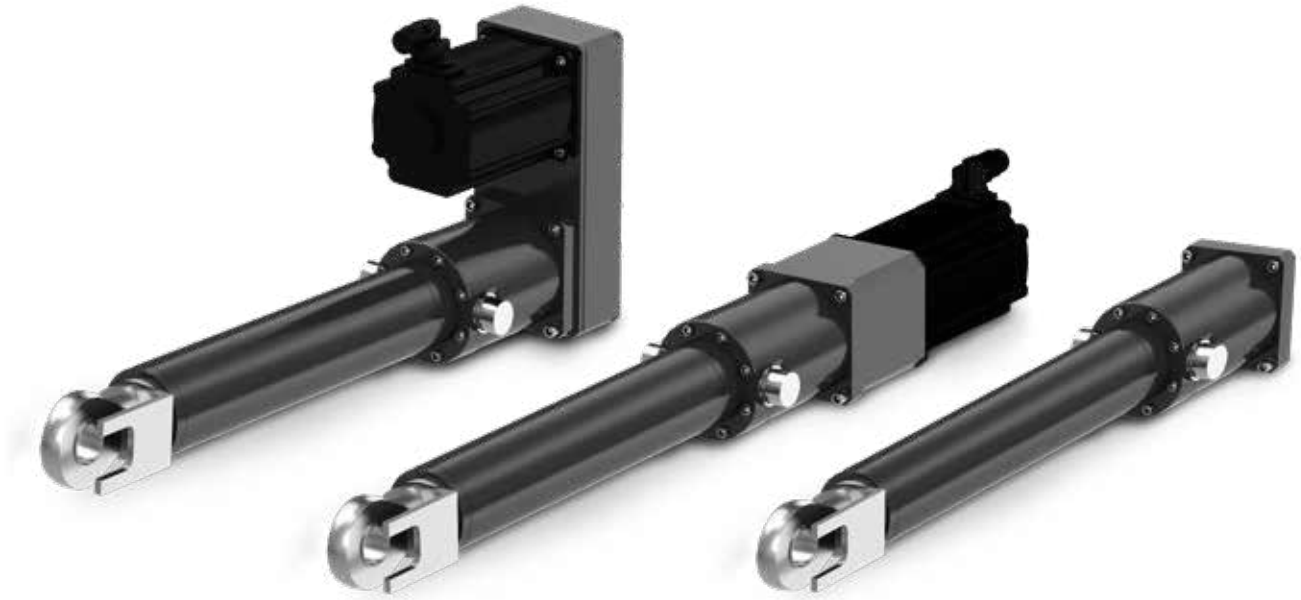

Features

- High performance roller screw
- Steel push tube and protection tube
- Modular concept
- Anti-rotation with profile rail guide
- Possibility to re-lubricate the roller screw nut with direct access
- Optional low lead roller screw or high-lead ball screw available.
- Brushless servo motors and customized motor adapters

Benefits

- High load with long life capacity as well as high acceleration and speed capabilities
- High stiffness and robustness
- Multiple combinations to fit a wide range of applications
- Extreme push tube torque resistance
- Low maintenance requirements
- Optimal solution for a wide range of applications where high load, high positioning accuracy or high speed is needed.

Product description

Electric cylinders SRSA are a straight forward combination of Ewellix's high quality planetary roller screws, SKF's angular contact ball bearings that will hold load and servomotors so they can perform highly efficient linear movements with full controllability. The SRSA housing is made of steel for high stiffness and robustness. The wide range consists of cylinders with screw sizes from 39 mm up to 75 mm. This enables the use of electric SRSA cylinders in applications with peak forces up to 500 kN, where – in the past – only hydraulic cylinders were an option.

For long strokes, the free end of the screw shaft is supported and guided inside the push-tube to prevent any vibration.

The optional anti-rotation device is made of profile rail guides. This pre-loaded design provides very high torsional stiffness and durability.

Two internal bumpers secure the mechanism during the adjustment phase, protecting the screw nut from damage due to impact with the mechanical end stops.

For very high positioning accuracy, Ewellix offers the slow moving SVSA range with high precision recirculating roller-screws. Thanks to the very short screw lead of 1 mm only, it is easier to control the actuator while doing fine positioning adjustments.

To cover the high speed applications as well, Ewellix equipped the SLSA versions with high lead ball screws. Those cylinders provide fast acceleration and speeds up to 1,5 m/s thanks to the long screw lead of up to 40 mm (see customization solutions).

The full range of SRSA and SVSA is available in inline configurations as well as in parallel configurations to fit most applications.

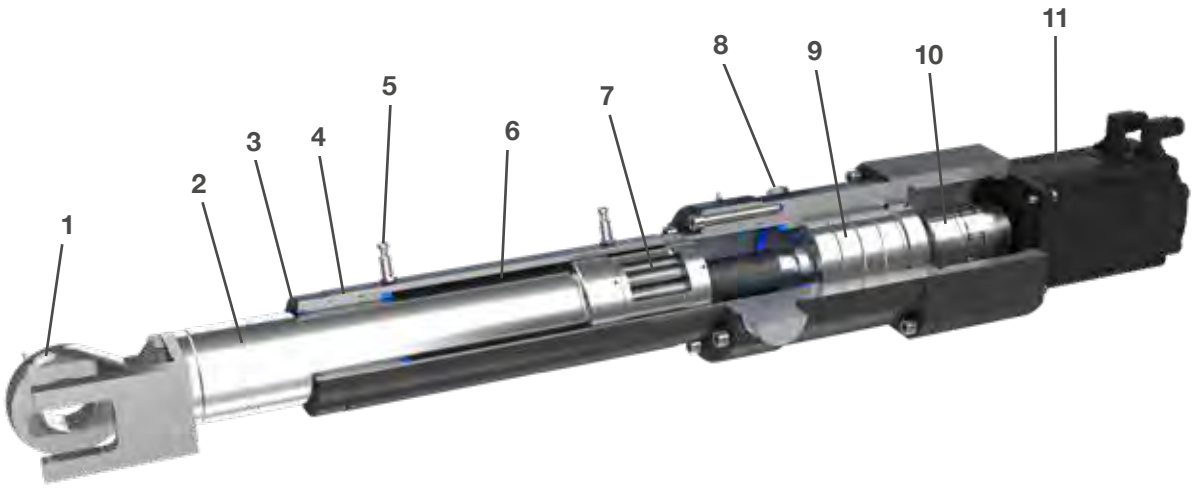

1. Rod end
2. Steel push tube
3. Scraper seal to protect against contaminants
4. Guiding bushing
5. Home and limit switches
6. Steel protection tube
7. High quality Ewellix planetary roller screw for highest axial loads with low play and high efficiency
8. Sinter filter for high airflow
9. High quality SKF angular contact ball bearings
10. Coupling
11. Servomotor

Motors and gearboxes

Servo motors

The SRSA can be ordered with a servo motor. In this case, Ewellix has selected a series of Lenze motors and drives that best matches the performance of the actuator to the end-user application. To complete the design, several options can be selected such as absolute encoder (EnDat, Hyperface), safety brake or associated servodrive. It is also possible to equip the SRSA with your preferred brand of servo motor so that it integrates best into your system. Please contact Ewellix to check the feasibility of your configuration. For more information, please visit the following sites:

Motors:
http://www.lenze.com/en-us/products/motors/
Drives:
http://www.lenze.com/en-us/products/inverters/

Drive options

The performance attributes shown in the table on the previous page are the result of specific Lenze servo motor and drive combinations. The SRSA can be offered with or without the servodrive. The servodrive can be in the recommended configuration or any other configuration that fits your installation.

In the case of a different combination, please contact Ewellix to determine what effect the different configuration will have on the performance of the actuator.

Performance overview of linear units

Linear unit	F_{max}	F_{max0}	V_{max}
SRSA-U-3905	150	150	342
SRSA-U-3910	150	150	683
SRSA-U-3915	150	150	1 025
SRSA-U-4805	260	260	278
SRSA-U-4810	260	260	556
SRSA-U-4815	260	260	833
SRSA-U-4820	260	260	1 111
SRSA-U-6010	370	370	444
SRSA-U-6015	370	370	667
SRSA-U-6020	370	370	889
SRSA-U-7510	500	500	356
SRSA-U-7515	500	500	533
SRSA-U-7520	500	500	711
SVSA-U-3201	60	60	10,4
SVSA-U-4001	80	80	8,3
SVSA-U-5001	175	175	6,7

EWELLIX

Performance overview of actuators with servomotors

Linear unit	Interface and gear ratio	Motor	F_c	F_{c0}	F_p	F_{p0}	V_{max}
–	–	–	kN	kN	kN	kN	mm/s
SRSA3905	L10/ P10	LC9	16,2	25,8 / 25	29,2	47,2 / 45,7	269
SRSA3905	L30/ P30	LA6	30,1	41,1 / 39,9	63,3	88,5 / 85,8	113
SRSA3905	L40/ P40	LA6	40,2	54,8 / 53,1	84,4	118 / 114,4	84
SRSA3910	L30/ P30	LC1	20,3	29,8 / 28,9	29,8	62,4 / 60,6	179
SRSA3910	L50/ P50	LC1	33,9	49,6 / 48,1	47,9	104,1 / 100,9	108
SRSA3910	L70/ P70	LC1	47,4	69,5 / 67,4	67,1	145,7 / 141,3	77
SRSA3915	L10/ P10	LB6	7,1	12 / 11,7	9,1	20,1 / 19,5	806
SRSA3915	L30/ P30	LD3	32,3	42,6 / 41,3	38,2	68,7 / 66,7	219
SRSA3915	L50/ P50	LD3	53,8	71 / 68,9	63,6	114,6 / 111,1	131
SRSA4805	L10/ P10	LD3	30,3	40 / 38,8	35,8	64,5 / 62,6	219
SRSA4805	L30/ P30	LD1	54,8	61,2 / 59,4	63,4	117,6 / 114,1	77
SRSA4805	L40/ P40	LD1	73,1	81,6 / 79,2	84,5	156,8 / 152,1	58
SRSA4810	L30/ P30	LD2	36,6	49,5 / 48	48,4	87 / 84,4	167
SRSA4810	L40/ P40	LD2	48,8	66 / 64,1	64,5	116 / 112,5	125
SRSA4810	L50/ P50	LD2	61	82,5 / 80,1	80,6	145 / 140,6	100
SRSA4815	L10/ P10	LD6	17,8	28,9 / 28,1	29,3	51,8 / 50,3	713
SRSA4815	L50/ P50	LD5	47,3	83,2 / 80,7	100,4	137,8 / 133,6	150
SRSA4815	L70/ P70	LD5	66,3	116,5 / 113	140,5	192,9 / 187,1	107
SRSA4820	L10/ P10	LD6	13,4	21,7 / 21,1	20,2	38,9 / 37,7	950
SRSA4820	L50/ P50	LD7	39,2	78,3 / 76	83,8	185,4 / 179,9	200
SRSA4820	L70/ P70	LD7	54,8	109,7 / 106,4	117,4	259,6 / 251,8	143
SRSA6010	L30/ P30	LD2	36,2	49 / 47,5	47,8	86 / 83,4	167
SRSA6010	L40/ P40	LD5	54,9	96,5 / 93,6	116,4	159,8 / 155	125
SRSA6010	L50/ P50	LD5	68,6	120,6 / 117	145,5	199,7 / 193,7	100
SRSA6015	L30/ P30	LD6	51,3	83,3 / 80,8	84,2	149,2 / 144,7	238
SRSA6015	L50/ P50	LD7	51,6	103,3 / 100,2	110,5	244,4 / 237,1	150
SRSA6015	L70/ P70	LD7	72,3	144,6 / 140,2	154,7	342,2 / 331,9	107
SRSA6020	L10/ P10	LD6	13,4	21,7 / 21,1	22	38,9 / 37,7	889
SRSA6020	L70/ P70	LD7	54,8	109,7 / 106,4	117,4	259,6 / 251,8	143
SRSA6020	L100/ P100	LD7	78,3	156,7 / 152	167,7	370,8 / 359,7	100
SRSA7510	L30/ P30	LD7	44,4	88,7 / 86,1	94,9	210 / 203,7	167
SRSA7510	L50/ P50	LD7	73,9	147,9 / 143,4	158,2	350 / 339,5	100
SRSA7510	L70/ P70	LD7	103,5	207 / 200,8	221,5	490 / 475,3	71
SRSA7515	L30/ P30	LD6	50,7	82,3 / 79,8	83,3	147,5 / 143,1	238
SRSA7515	L50/ P50	LD6	84,5	137,2 / 133,1	138,8	245,8 / 238,4	143
SRSA7515	L70/ P70	LD6	118,4	192,1 / 186,3	194,3	344,1 / 333,8	102
SRSA7520	L10/ P10	LD6	13,2	21,5 / 20,8	21,7	38,4 / 37,3	711
SRSA7520	L70/ P70	LD6	89,8	145,7 / 141,3	147,4	261,1 / 253,2	136
SRSA7520	L100/ P100	LD6	128,3	208,1 / 201,9	210,6	373 / 361,8	95
SVSA3201	L10/ P10	LC7	10,2	13,8 / 13,4	18,7	42,8 / 41,5	10
SVSA3201	L10/ P10	LD9	14,8	24,7 / 23,9	38,8	57,8 / 56,1	10
SVSA4001	L10/ P10	LA1	16,5	19,2 / 18,7	18,3	54,1 / 52,5	8
SVSA4001	L10/ P10	LA3	30,1	34,3 / 33,2	43,6	79,1 / 79,1	8
SVSA5001	L10/ P10	LA5	36	40 / 38,8	45,3	93 / 90,2	7
SVSA5001	L10/ P10	LE3	61,3	74,6 / 72,4	79,2	174,2 / 169,6	7

Standard motor types

Motor	Lenze servo motor	Lenze 9400 Highline servoamplifier
LA1	MCS12D20	E94ASHE0044
LA3	MCS12H15	E94ASHE0074
LA4	MCS12H35	E94ASHE0134
LA5	MCS12L20	E94ASHE0074
LA6	MCS12L41	E94ASHE0134
LB6	MCS14P32	E94ASHE0244
LC1	MCS14H32	E94ASHE0174
LC7	MCS09F38	E94ASHE0044
LC9	MCS14L32	E94ASHE0244
LD1	MCS14H28	E94ASHE0174
LD2	MCS14L30	E94ASHE0324
LD3	MCS14P26	E94ASHE0324
LD5	MCS19J30	E94ASHE0324
LD6	MCS19P29	E94ASHE0474
LD7	MCS19P30	E94ASHE0474
LD9	MCS09L41	E94ASHE0074
LE3	MCS14L15	E94ASHE0134

Manuals

Supporting documents are available for downloading on ewellix.com

3D Models

Product configurators for 3D models download are available on ewellix.com

SRSA, SVSA and SLSA operating manual

3D model configurator

SRSA-U-39xx

Linear unit

Technical data

Designation	Symbol	Unit	SRSA-U-3905	SRSA-U-3910	SRSA-U-3915
Performance Data					
Max. dynamic axial force	F_{max}	kN	150	150	150
Max. dynamic axial force L10[1]	F_{L10}	kN	90	90	90
Max. static axial force	F_{max0}	kN	150	150	150
Dynamic load capacity	C	kN	129	153	168
Maximum torque to reach F_{max}	M_{max}	Nm	159	301	446
Max. linear speed	v_{max}	mm/s	342	683	1 025
Max. rotational speed	n_{max}	1/min	4 100	4 100	4 100
Max. acceleration	a_{max}	m/s^2	9,5	19,1	28,6
Duty cycle	D_{unit}	%	100	100	100
Mechanical Data					
Screw type	–	–	Roller screw	Roller screw	Roller screw
Screw diameter	d_{screw}	mm	39	39	39
Screw lead	p_{screw}	mm	5	10	15
Lead accuracy	–	–	G5	G5	G5
Stroke[2]	s	mm	100…900	100…900	100…900
Internal overstroke each side	s_0	mm	5	5	5
Backlash[3]	$s_{backlash}$	mm	0	0	0
Efficiency	η_{lu}	%	75	79	80
Inertia @ 0 mm stroke	J_{lu}	10^{-4} kgm^2	21,3	21,3	21,3
Δ Inertia per 100 mm stroke	ΔJ	10^{-4} kgm^2	1,8	1,8	1,8
Weight @ 0 mm stroke	m_{lu}	kg	33,8	33,8	33,8
Δ weight per 100 mm stroke	Δm	kg	4,3	4,3	4,3
Weight of anti-rotation @ 0 mm stroke	m_{arot0}	kg	–0,3	–0,3	–0,3
Δ Weight of anti-rot. per 100 mm stroke	Δm_{arot}	kg	0,5	0,5	0,5
Environment					
Ambient temperature	$T_{ambient}$	°C	0…+40	0…+40	0…+40
Degree of protection[4]	IP	–	54	54	54

[1] Maximum dynamic axial force usable to apply the theoretical lifetime calculation (L10)
[2] By 100 mm steps
[3] Backlash elimination up to stroke 600 mm. For longer strokes $s_{backlash}$ = 0,02 mm for screw lead 5, 0,04 for lead 10, and 0,07 for lead 15
[4] With anti-rotation option IP44

Dimensional drawing

SRSA–U–39

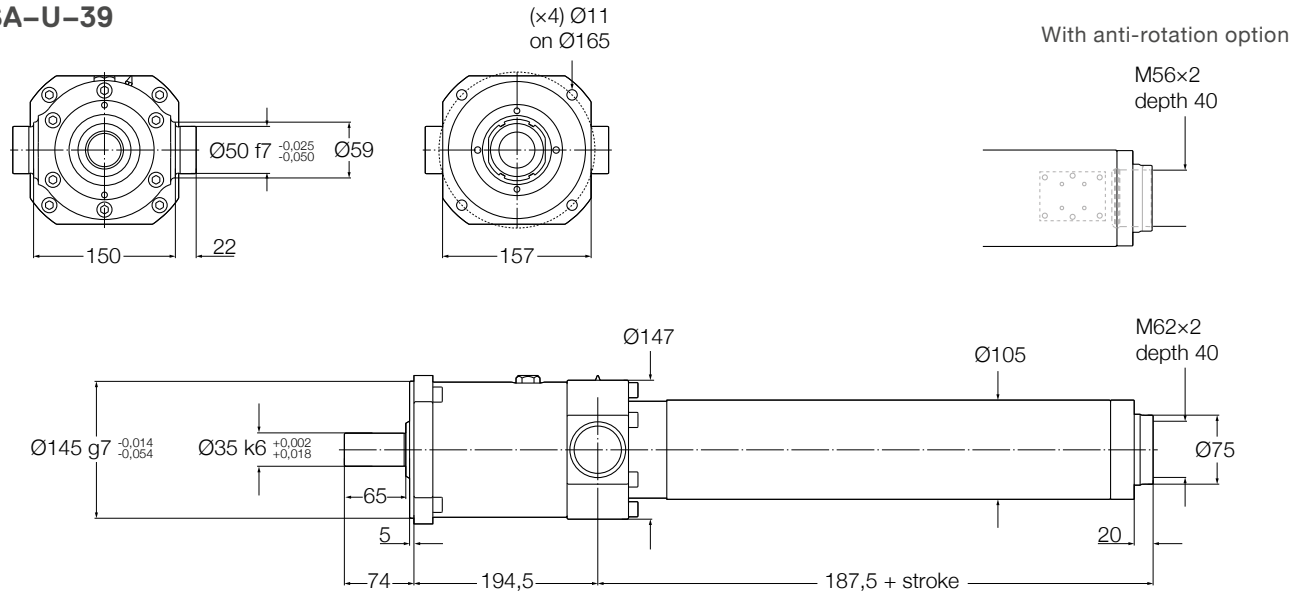

Performance diagrams

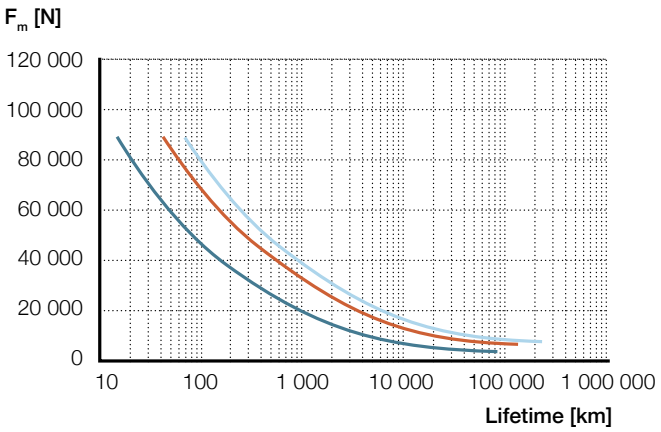

- SRSA-3905
- SRSA-3910
- SRSA-3915

Ordering key

See **page 246**

SRSA-U-48xx

Linear unit

Technical data

Designation	Symbol	Unit	SRSA-U-4805	SRSA-U-4810	SRSA-U-4815	SRSA-U-4820
Performance Data						
Max. dynamic axial force	F_{max}	kN	260	260	260	260
Max. dynamic axial force L10[1]	F_{L10}	kN	140	140	140	140
Max. static axial force	F_{max0}	kN	260	260	260	260
Dynamic load capacity	C	kN	198	232	258	266
Maximum torque to reach F_{max}	M_{max}	Nm	283	527	773	1 031
Max. linear speed	v_{max}	mm/s	278	556	833	1 111
Max. rotational speed	n_{max}	1/min	3 333	3 333	3 333	3 333
Max. acceleration	a_{max}	m/s^2	9,5	19,1	28,6	38,2
Duty cycle	D_{unit}	%	100	100	100	100
Mechanical Data						
Screw type	–	–	Roller screw	Roller screw	Roller screw	Roller screw
Screw diameter	d_{screw}	mm	48	48	48	48
Screw lead	p_{screw}	mm	5	10	15	20
Lead accuracy	–	–	G5	G5	G5	G5
Stroke[2]	s	mm	100…1 200	100…1 200	100…1 200	100…1 200
Internal overstroke each side	s_0	mm	5	5	5	5
Backlash[3]	$s_{backlash}$	mm	0	0	0	0
Efficiency	η_{lu}	%	73%	79%	80%	80%
Inertia @ 0 mm stroke	J_{lu}	10^{-4} kgm^2	54,3	54,3	54,3	54,3
Δ Inertia per 100 mm stroke	ΔJ	10^{-4} kgm^2	4,1	4,1	4,1	4,1
Weight @ 0 mm stroke	m_{lu}	kg	53,2	53,2	53,2	53,2
Δ weight per 100 mm stroke	Δm	kg	5,7	5,7	5,7	5,7
Weight of anti-rotation @ 0 mm stroke	m_{arot0}	kg	3,6	3,6	3,6	3,6
Δ Weight of anti-rot. per 100 mm stroke	Δm_{arot}	kg	0,7	0,7	0,7	0,7
Environment						
Ambient temperature	$T_{ambient}$	°C	0…+40	0…+40	0…+40	0…+40
Degree of protection[4]	IP	–	54	54	54	54

[1] Maximum dynamic axial force usable to apply the theoretical lifetime calculation (L10)
[2] By 100 mm steps
[3] Backlash elimination up to stroke 600 mm. For longer strokes $s_{backlash}$ = 0,02 mm for screw lead 5, 0,04 for lead 10, and 0,07 for lead 15 & 20
[4] With anti-rotation option IP44

Dimensional drawing

SRSA–U–48

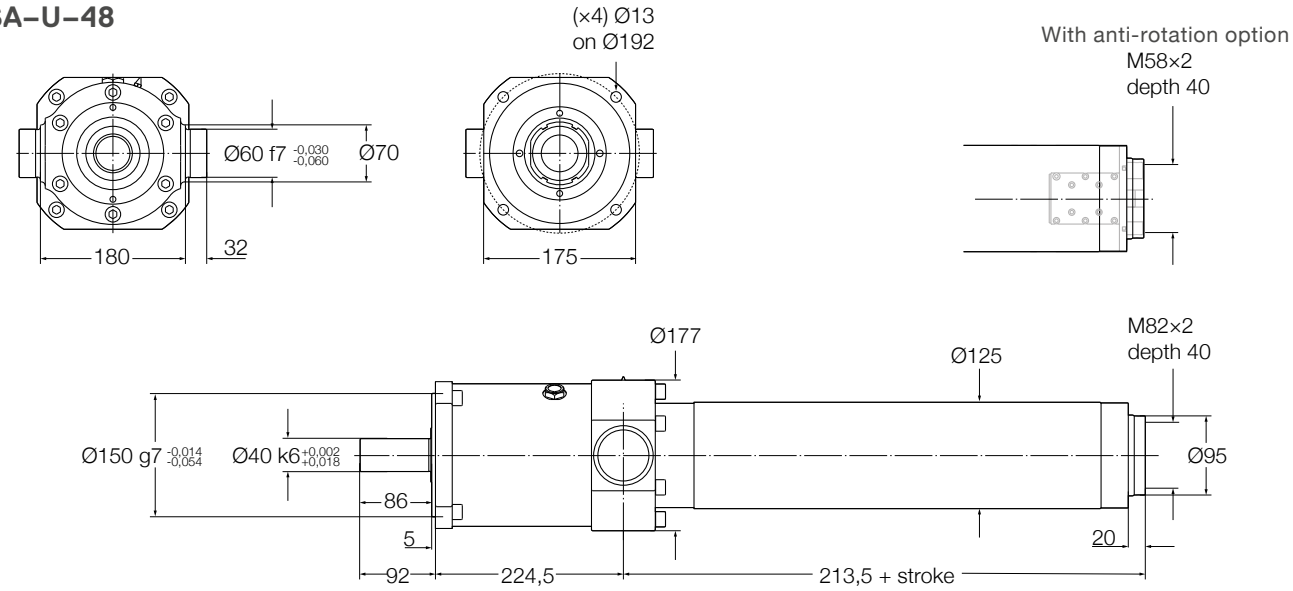

Performance diagrams

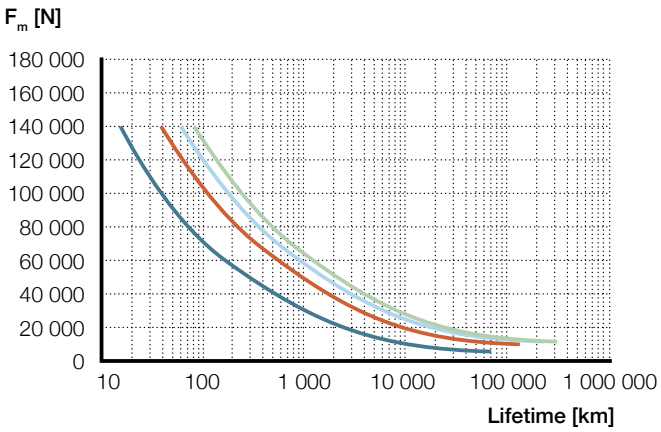

- SRSA-4805
- SRSA-4810
- SRSA-4815
- SRSA-4820

Ordering key

See **page 246**

SRSA-U-60xx

Linear unit

Technical data

Designation	Symbol	Unit	SRSA-U-6010	SRSA-U-6015	SRSA-U-6020
Performance Data					
Max. dynamic axial force	F_{max}	kN	370	370	370
Max. dynamic axial force L10[1]	F_{L10}	kN	250	250	250
Max. static axial force	F_{max0}	kN	370	370	370
Dynamic load capacity	C	kN	339	373	395
Maximum torque to reach F_{max}	M_{max}	Nm	759	1 112	1 467
Max. linear speed	v_{max}	mm/s	444	667	889
Max. rotational speed	n_{max}	1/min	2 667	2 667	2 667
Max. acceleration	a_{max}	m/s^2	19,1	28,6	38,2
Duty cycle	D_{unit}	%	100	100	100
Mechanical Data					
Screw type	–	–	Roller screw	Roller screw	Roller screw
Screw diameter	d_{screw}	mm	60	60	60
Screw lead	p_{screw}	mm	10	15	20
Lead accuracy	–	–	G5	G5	G5
Stroke[2]	s	mm	100…1 300	100…1 300	100…1 300
Internal overstroke each side	s_0	mm	10	10	10
Backlash[3]	$s_{backlash}$	mm	0	0	0
Efficiency	η_{lu}	%	78%	79%	80%
Inertia @ 0 mm stroke	J_{lu}	10^{-4} kgm^2	178	178	178
Δ Inertia per 100 mm stroke	ΔJ	10^{-4} kgm^2	10,1	10,1	10,1
Weight @ 0 mm stroke	m_{lu}	kg	83,6	83,6	83,6
Δ weight per 100 mm stroke	Δm	kg	8,9	8,9	8,9
Weight of anti-rotation @ 0 mm stroke	m_{arot0}	kg	5,2	5,2	5,2
Δ Weight of anti-rot. per 100 mm stroke	Δm_{arot}	kg	0,8	0,8	0,8
Environment					
Ambient temperature	$T_{ambient}$	°C	0…+40	0…+40	0…+40
Degree of protection[4]	IP	–	54	54	54

[1] Maximum dynamic axial force usable to apply the theoretical lifetime calculation (L10)
[2] By 100 mm steps
[3] Backlash elimination up to stroke 800 mm. For longer strokes $s_{backlash}$ = 0,04 mm for screw lead 10, and 0,07 for lead 15 & 20
[4] With anti-rotation option IP44

Dimensional drawing

SRSA–U–60

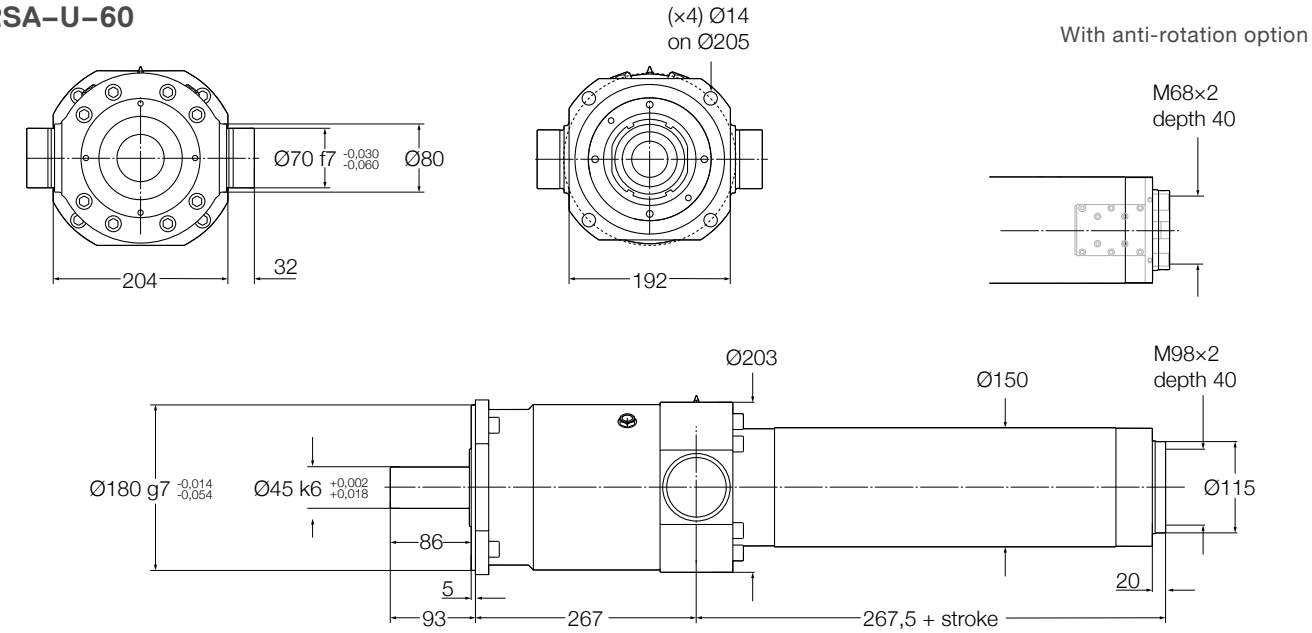

Performance diagrams

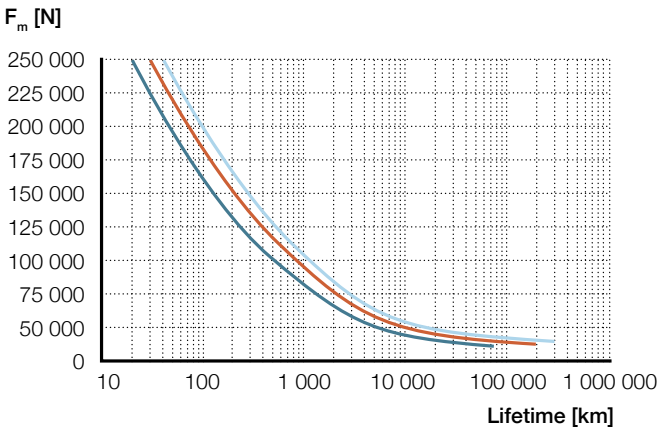

- SRSA-6010
- SRSA-6015
- SRSA-6020

Ordering key

See **page 246**

SRSA-U-75xx

Linear unit

Technical data

Designation	Symbol	Unit	SRSA-U-7510	SRSA-U-7515	SRSA-U-7520
Performance Data					
Max. dynamic axial force	F_{max}	kN	500	500	500
Max. dynamic axial force L10[1]	F_{L10}	kN	450	450	450
Max. static axial force	F_{max0}	kN	500	500	500
Dynamic load capacity	C	kN	505	561	572
Maximum torque to reach F_{max}	M_{max}	Nm	1 050	1 521	2 004
Max. linear speed	v_{max}	mm/s	356	533	711
Max. rotational speed	n_{max}	1/min	2 133	2 133	2 133
Max. acceleration	a_{max}	m/s^2	19,1	28,6	38,2
Duty cycle	D_{unit}	%	100	100	100
Mechanical Data					
Screw type	–	–	Roller screw	Roller screw	Roller screw
Screw diameter	d_{screw}	mm	75	75	75
Screw lead	p_{screw}	mm	10	15	20
Lead accuracy	–	–	G5	G5	G5
Stroke[2]	s	mm	100…1 500	100…1 500	100…1 500
Internal overstroke each side	s_0	mm	10	10	10
Backlash[3]	$s_{backlash}$	mm	0	0	0
Efficiency	η_{lu}	%	76%	79%	79%
Inertia @ 0 mm stroke	J_{lu}	10^{-4} kgm^2	625	625	625
Δ Inertia per 100 mm stroke	ΔJ	10^{-4} kgm^2	24,6	24,6	24,6
Weight @ 0 mm stroke	m_{lu}	kg	156,5	156,5	156,5
Δ weight per 100 mm stroke	Δm	kg	11,3	11,3	11,3
Weight of anti-rotation @ 0 mm stroke	m_{arot0}	kg	7,5	7,5	7,5
Δ Weight of anti-rot. per 100 mm stroke	Δm_{arot}	kg	2,7	2,7	2,7
Environment					
Ambient temperature	$T_{ambient}$	°C	0…+40	0…+40	0…+40
Degree of protection[4]	IP	–	54	54	54

[1] Maximum dynamic axial force usable to apply the theoretical lifetime calculation (L10)
[2] By 100 mm steps
[3] Backlash elimination up to stroke 1 000 mm. For longer strokes $s_{backlash}$ = 0,04 mm for screw lead 10, and 0,07 for lead 15 & 20
[4] With anti-rotation option IP44

Dimensional drawing

SRSA–U–75

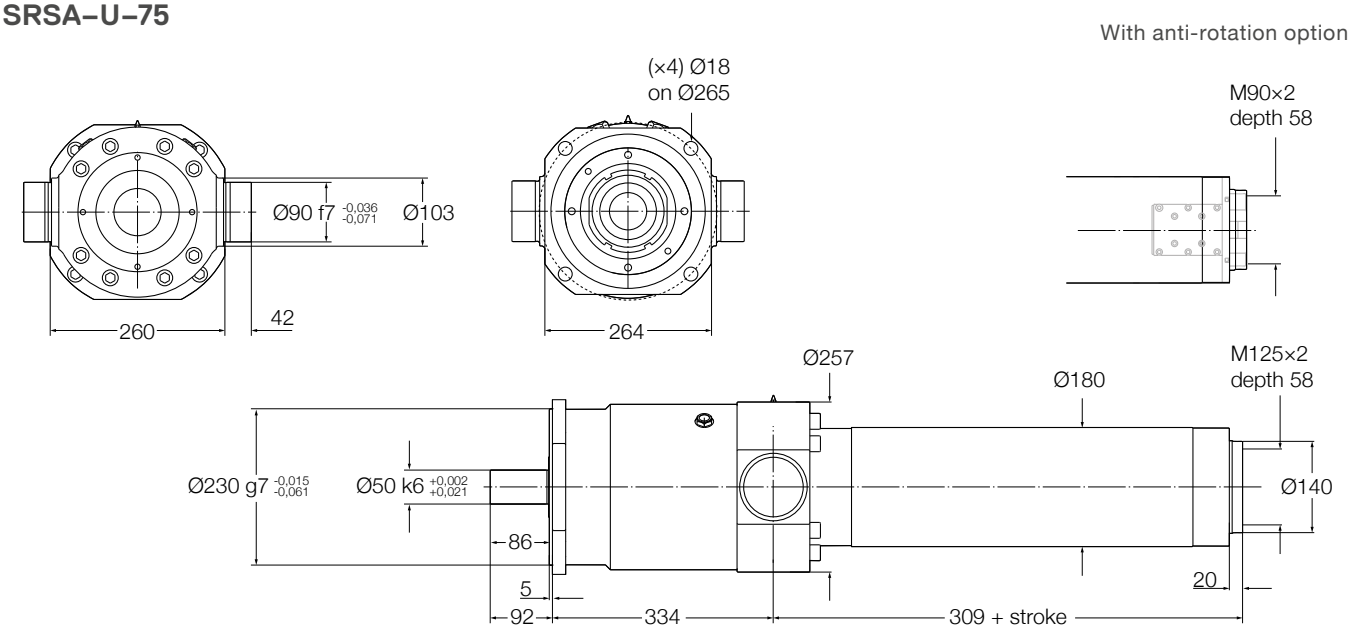

Performance diagrams

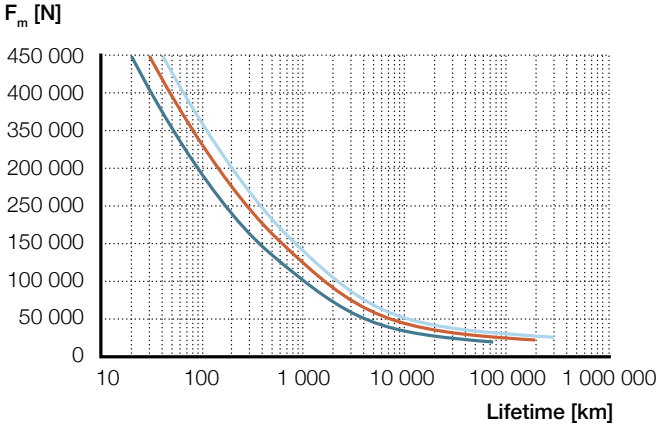

- SRSA-7510
- SRSA-7515
- SRSA-7520

Ordering key

See **page 246**

SVSA-U-xx01

Linear unit

Technical data

Designation	Symbol	Unit	SVSA-U-3201	SVSA-U-4001	SVSA-U-5001
Performance Data					
Max. dynamic axial force	F_{max}	kN	60	80	175
Max. dynamic axial force L10[1]	F_{L10}	kN	40	50	60
Max. static axial force	F_{max0}	kN	60	80	175
Dynamic load capacity	C	kN	64	79	174
Maximum torque to reach F_{max}	M_{max}	Nm	18,3	26,6	65,7
Max. linear speed	v_{max}	mm/s	10	8	7
Max. rotational speed	n_{max}	1/min	625	500	400
Max. acceleration	a_{max}	m/s^2	0,6	0,6	0,6
Duty cycle	D_{unit}	%	100	100	100
Mechanical Data					
Screw type	–	–	Roller screw	Roller screw	Roller screw
Screw diameter	d_{screw}	mm	32	40	50
Screw lead	p_{screw}	mm	1	1	1
Lead accuracy	–	–	G5	G5	G5
Stroke[2]	s	mm	100…600	100…800	100…900
Internal overstroke each side	s_0	mm	5	5	5
Backlash[3]	$s_{backlash}$	mm	0	0	0
Efficiency	η_{lu}	%	52	48	42
Inertia @ 0 mm stroke	J_{lu}	10^{-4} kgm^2	3,4	6,8	21,3
Δ Inertia per 100 mm stroke	ΔJ	10^{-4} kgm^2	0,31	0,64	1,8
Weight @ 0 mm stroke	m_{lu}	kg	10,8	17,4	34,2
Δ weight per 100 mm stroke	Δm	kg	2,4	3,2	4,8
Weight of anti-rotation @ 0 mm stroke	m_{arot0}	kg	2,6	–0,3	–0,3
Δ Weight of anti-rot. per 100 mm stroke	Δm_{arot}	kg	0,3	0,2	0,4
Environment					
Ambient temperature	$T_{ambient}$	°C	0…+40	0…+40	0…+40
Degree of protection[4]	IP	–	54	54	54

[1] Maximum dynamic axial force usable to apply the theoretical lifetime calculation (L10)
[2] By 100 mm steps
[3] Backlash elimination up to stroke 600 mm. For longer strokes $s_{backlash}$ = 0,02 mm
[4] With anti-rotation option IP44

Performance diagrams

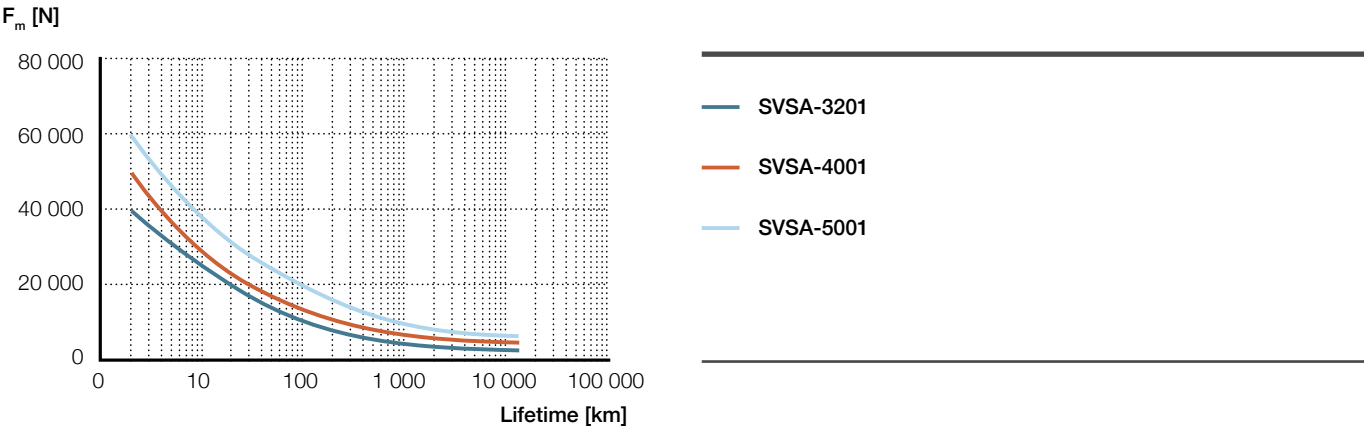

Dimensional drawing

With anti-rotation option

SVSA-U-3201

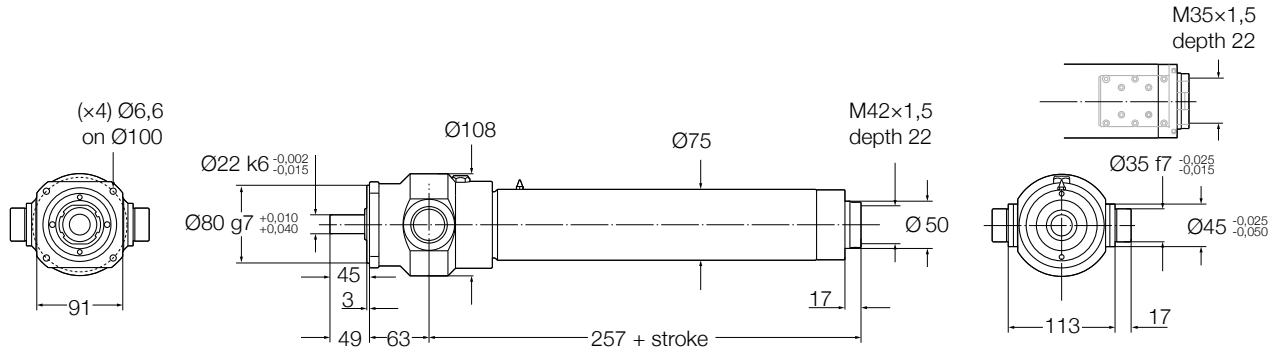

SVSA-U-4001

With anti-rotation option

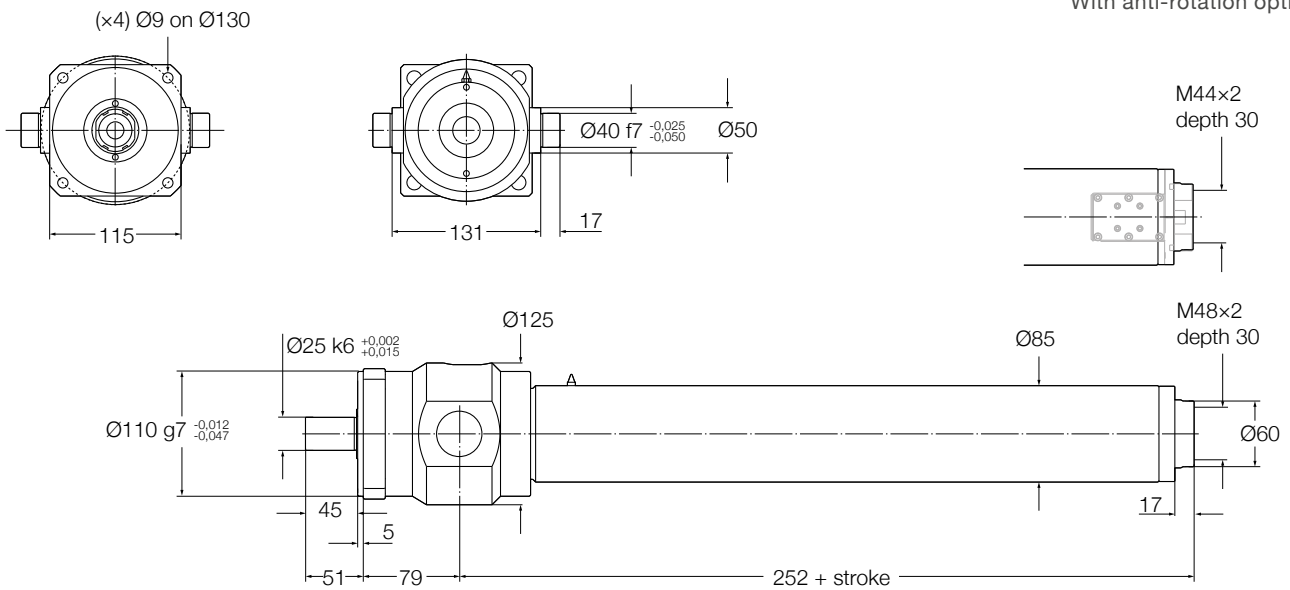

SVSA-U-5001

With anti-rotation option

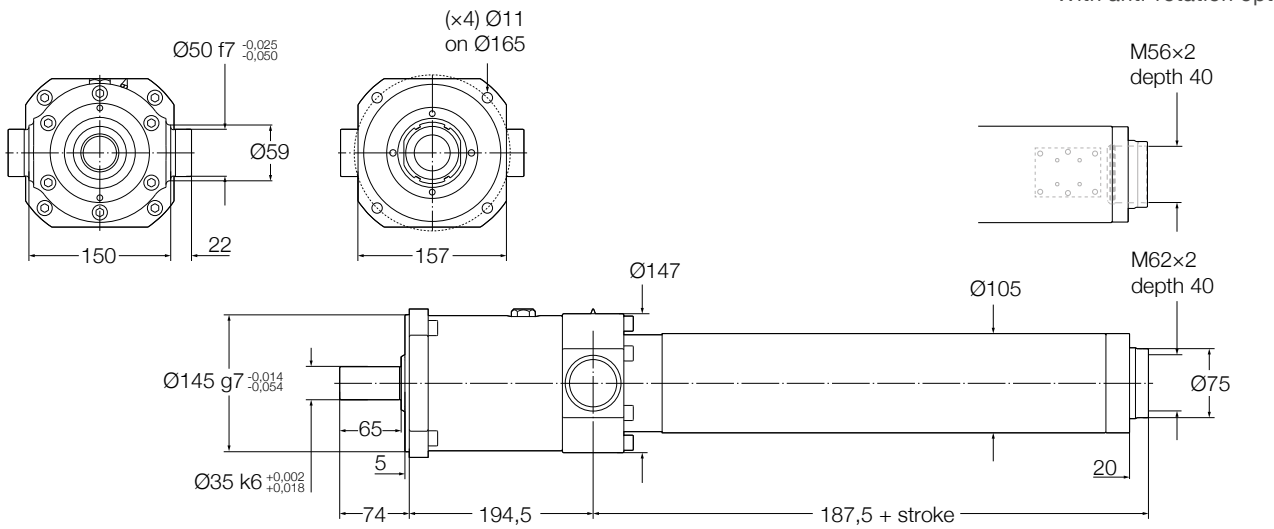

Ordering key

See **page 246**

Ordering key

Linear unit

S R S A - U - 4 8 1 0 - 0 2 0 0 - T R A F - N

Type
R Planetary roller screw
V Recirculating roller screw

Linear unit only

Screw diameter

Screw lead

Stroke

Rear attachment
T Trunnions
Z Special
N No attachment

Front attachment
R Rod end
F Rod end with fork
Z Non standard
N No attachment (female thread)

Anti-rotation
A Anti-rotation
N No anti-rotation

Limit switches
F 2 limit switches and 1 home switch
S 2 limit switches only
M 1 limit switch and 1 home switch
L 1 limit switch only
H 1 home switch only
N No switch

Motor interface
N No interface
L Inline interface (on request)
P Parallel interface (on request)

SRSA-S-39xx

Electric cylinder servo motor, inline configuration

Technical data

Designation	Symbol	Unit	Servo motor and inline adapter		
			L30	L70	L30
			LA6	LC1	LD3
Performance Data					
Continuous force @ zero speed	F_{c0}	kN	41,1	69,5	42,6
Continuous force @ max. speed	F_c	kN	30,1	47,4	32,3
Peak force @ zero speed	F_{p0}	kN	88,5	145,7	68,7
Peak force @ max. speed	F_p	kN	63,3	67,1	38,2
Dynamic load capacity	C	kN	129	153	168
Holding force (motorbrake option)	F_{Hold}	kN	58	115	32
Max. linear speed	v_{max}	mm/s	113	77	219
Max. acceleration	a_{max}	m/s^2	5,5	4,2	7,7
Duty cycle	D	%	100	100	100
Mechanical Data					
Screw type	–	–	Roller screw	Roller screw	Roller screw
Screw diameter	d_{screw}	mm	39	39	39
Screw lead	p_{screw}	mm	5	10	15
Lead accuracy	–	–	G5	G5	G5
Stroke[1]	s	mm	100…900	100…900	100…900
Internal overstroke each side	s_0	mm	5	5	5
Backlash[2]	$s_{backlash}$	mm	0	0	0
Gear reduction	i		3	7	3
Inertia @ 0 mm stroke	J	10^{-4} kgm^2	15,36	23,05	72,65
Δ Inertia per 100 mm stroke	ΔJ	10^{-4} kgm^2	0,2	0,04	0,20
Inertia of optional brake	J_{brake}	10^{-4} kgm^2	1,07	3,20	3,20
Weight @ 0 mm stroke	m	kg	66,1	88,4	101,9
Δ weight per 100 mm stroke	Δm	kg	4,3	4,3	4,3
Weight of optional brake	m_{brake}	kg	0,9	1,9	1,9
Weight of anti-rotation @ 0 mm stroke	m_{arot0}	kg	–0,3	–0,3	–0,3
Δ Weight of anti-rot. per 100 mm stroke	Δm_{arot}	kg	0,5	0,5	0,5
Electrical Data					
Motor type	–	–	Servo	Servo	Servo
Nominal voltage	U	V AC	400	400	400
Nominal current	I	A	12,4	16,5	28,3
Peak current	I_{peak}	A	31,2	39,6	56
Nominal power	P	kW	4,67	4,73	9,07
Environment and Standards					
Ambient temperature	$T_{ambient}$	°C	0…+40	0…+40	0…+40
Degree of protection[3]	IP	–	54	54	54

[1] By 100 mm steps
[2] Backlash elimination up to stroke 500 mm. For longer strokes $s_{backlash}$ = 0,02 mm for screw lead 5, 0,04 for lead 10, and 0,07 for lead 15
[3] With anti-rotation option IP44

Dimensional drawing

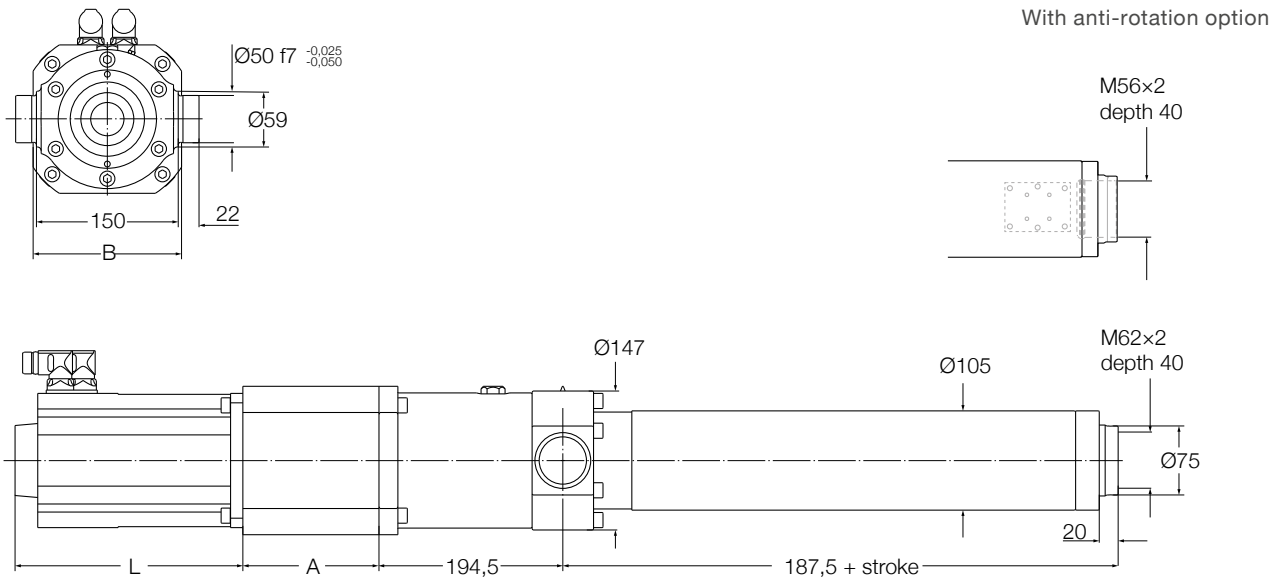

Reference	A	L	B	Added length for brake option	Added length for encoder option
–	mm				
L30LA6	186	415	185	20	49
L70LC1	216	455	185	28	50
L30LD3	216	584	185	28	50

Performance diagrams

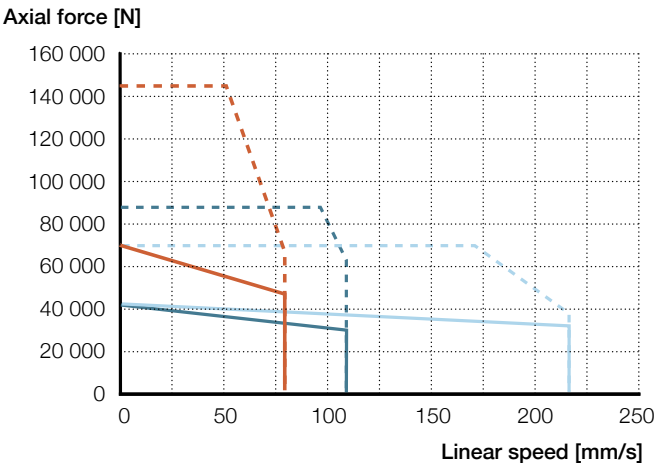

L30LA6 — F_{cont} — F_{peak}
L70LC1 — F_{cont} — F_{peak}
L30LD3 — F_{cont} — F_{peak}

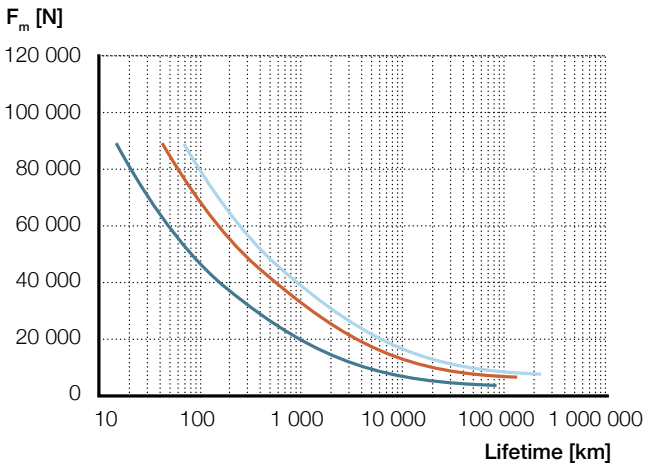

SRSA-3905 — SRSA-3910 — SRSA-3915

Ordering key

See **page 270**

SRSA-S-39xx

Electric cylinder servo motor, parallel configuration

Technical data

Designation	Symbol	Unit	Servo motor and parallel adapter		
			P30	P70	P30
			LA6	LC1	LD3
Performance Data					
Continuous force @ zero speed	F_{c0}	kN	39,9	67,4	41,3
Continuous force @ max. speed	F_c	kN	29,2	46	31,3
Peak force @ zero speed	F_{p0}	kN	85,8	141,3	66,7
Peak force @ max. speed	F_p	kN	61,4	65,1	37
Dynamic load capacity	C	kN	129	153	168
Holding force (motorbrake option)	F_{Hold}	kN	60	118	33
Max. linear speed	v_{max}	mm/s	113	77	219
Max. acceleration	a_{max}	m/s^2	1,6	0,5	4,3
Duty cycle	D	%	100	100	100
Mechanical Data					
Screw type	–	–	Roller screw	Roller screw	Roller screw
Screw diameter	d_{screw}	mm	39	39	39
Screw lead	p_{screw}	mm	5	10	15
Lead accuracy	–	–	G5	G5	G5
Stroke[1]	s	mm	100…900	100…900	100…900
Internal overstroke each side	s_0	mm	5	5	5
Backlash[2]	$s_{backlash}$	mm	0	0	0
Gear reduction	i		3	7	3
Inertia @ 0 mm stroke	J	10^{-4} kgm^2	54,85	213,66	72,65
Δ Inertia per 100 mm stroke	ΔJ	10^{-4} kgm^2	0,2	0,04	0,20
Inertia of optional brake	J_{brake}	10^{-4} kgm^2	1,07	3,20	3,20
Weight @ 0 mm stroke	m	kg	76,3	97,6	101,9
Δ weight per 100 mm stroke	Δm	kg	4,3	4,3	4,3
Weight of optional brake	m_{brake}	kg	0,9	1,9	1,9
Weight of anti-rotation @ 0 mm stroke	m_{arot0}	kg	–0,3	–0,3	–0,3
Δ Weight of anti-rot. per 100 mm stroke	Δm_{arot}	kg	0,5	0,5	0,5
Electrical Data					
Motor type	–	–	Servo	Servo	Servo
Nominal voltage	U	V AC	400	400	400
Nominal current	I	A	12,4	16,5	28,3
Peak current	I_{peak}	A	31,2	39,6	56
Nominal power	P	kW	4,67	4,73	9,07
Environment and Standards					
Ambient temperature	$T_{ambient}$	°C	0…+40	0…+40	0…+40
Degree of protection[3]	IP	–	54	54	54

[1] By 100 mm steps
[2] Backlash elimination up to stroke 500 mm. For longer strokes $s_{backlash}$ = 0,02 mm for screw lead 5, 0,04 for lead 10, and 0,07 for lead 15
[3] With anti-rotation option IP44

Dimensional drawing

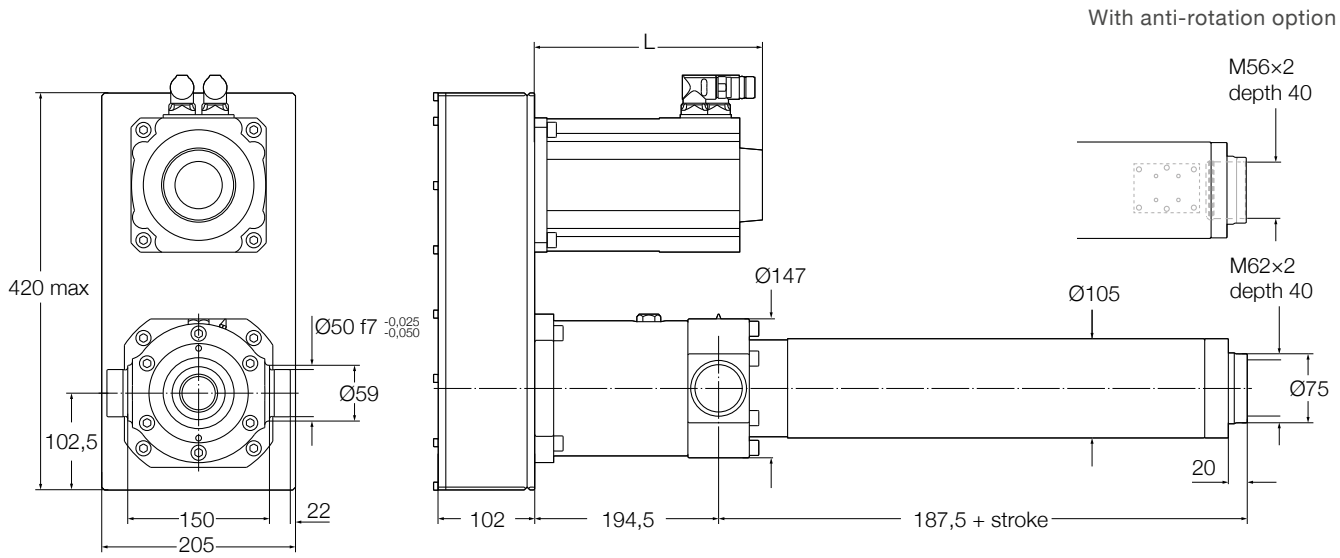

Reference	L	Added length for brake option	Added length for encoder option
–	mm		
P30LA6	403	20	49
P70LC1	483	28	50
P30LD3	584	28	50

Performance diagrams

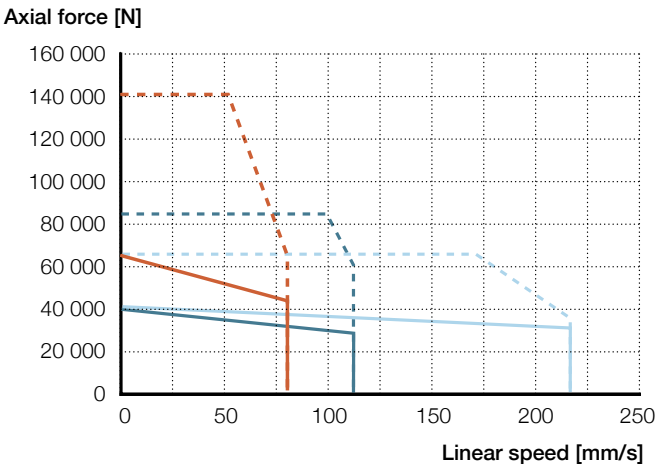

P30LA6 — F_{cont} — F_{peak}
P70LC1 — F_{cont} — F_{peak}
P30LD3 — F_{cont} — F_{peak}

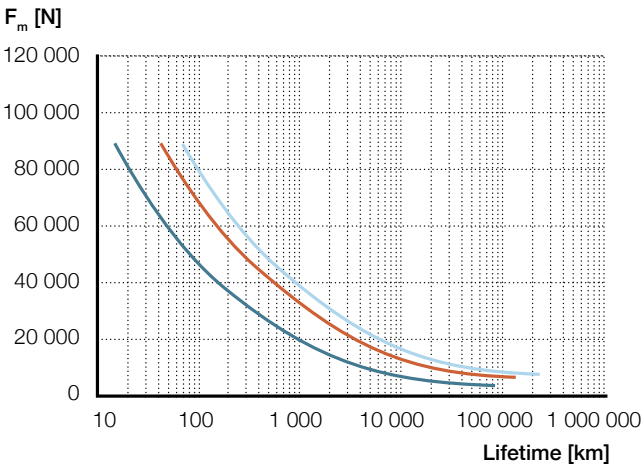

SRSA-3905 — SRSA-3910 — SRSA-3915

Ordering key

See **page 270**

SRSA-S-48xx

Electric cylinder
servo motor, inline configuration

Technical data

Designation	Symbol	Unit	Servo motor and inline adapter			
			L40	L50	L10	L70
			LD1	LD2	LD6	LD7
Performance Data						
Continuous force @ zero speed	F_{c0}	kN	81,6	82,5	28,9	109,7
Continuous force @ max. speed	F_c	kN	73,1	61	17,8	54,8
Peak force @ zero speed	F_{p0}	kN	156,8	145	51,8	259,6
Peak force @ max. speed	F_p	kN	84,5	80,6	29,3	117,4
Dynamic load capacity	C	kN	198	232	258	261
Holding force (motorbrake option)	F_{Hold}	kN	150	84	18	95
Max. linear speed	v_{max}	mm/s	58	100	713	143
Max. acceleration	a_{max}	m/s^2	3,5	4,1	13	3,6
Duty cycle	D	%	100	100	100	100
Mechanical Data						
Screw type	–	–	Roller screw	Roller screw	Roller screw	Roller screw
Screw diameter	d_{screw}	mm	48	48	48	48
Screw lead	p_{screw}	mm	5	10	15	20
Lead accuracy	–	–	G5	G5	G5	G5
Stroke[1]	s	mm	100…1 200	100…1 200	100…1 200	100…1 200
Internal overstroke each side	s_0	mm	5	5	5	5
Backlash[2]	$s_{backlash}$	mm	0	0	0	0
Gear reduction	i		4	5	1	7
Inertia @ 0 mm stroke	J	10^{-4} kgm^2	24,98	46,45	279,8	191,98
Δ Inertia per 100 mm stroke	ΔJ	10^{-4} kgm^2	0,26	0,16	4,12	0,08
Inertia of optional brake	J_{brake}	10^{-4} kgm^2	3,20	3,20	12,40	12,40
Weight @ 0 mm stroke	m	kg	109,1	126,6	128,8	168,2
Δ weight per 100 mm stroke	Δm	kg	5,7	5,7	5,7	5,7
Weight of optional brake	m_{brake}	kg	1,9	1,9	3,1	3,1
Weight of anti-rotation @ 0 mm stroke	m_{arot0}	kg	3,6	3,6	3,6	3,6
Δ Weight of anti-rot. per 100 mm stroke	$Δm_{arot}$	kg	0,7	0,7	0,7	0,7
Electrical Data						
Motor type	–	–	Servo	Servo	Servo	Servo
Nominal voltage	U	V AC	400	400	400	400
Nominal current	I	A	16,5	26,7	44,7	34,9
Peak current	I_{peak}	A	39,6	56	94	94
Nominal power	P	kW	5,96	8,01	15,82	10,05
Environment and Standards						
Ambient temperature	$T_{ambient}$	°C	0…+40	0…+40	0…+40	0…+40
Degree of protection[3]	IP	–	54	54	54	54

[1] By 100 mm steps
[2] Backlash elimination up to stroke 600 mm. For longer strokes $s_{backlash}$ = 0,02 mm for screw lead 5, 0,04 mm for lead 10, and 0,07 for lead 15 & 20
[3] With anti-rotation option IP44

Dimensional drawing

With anti-rotation option

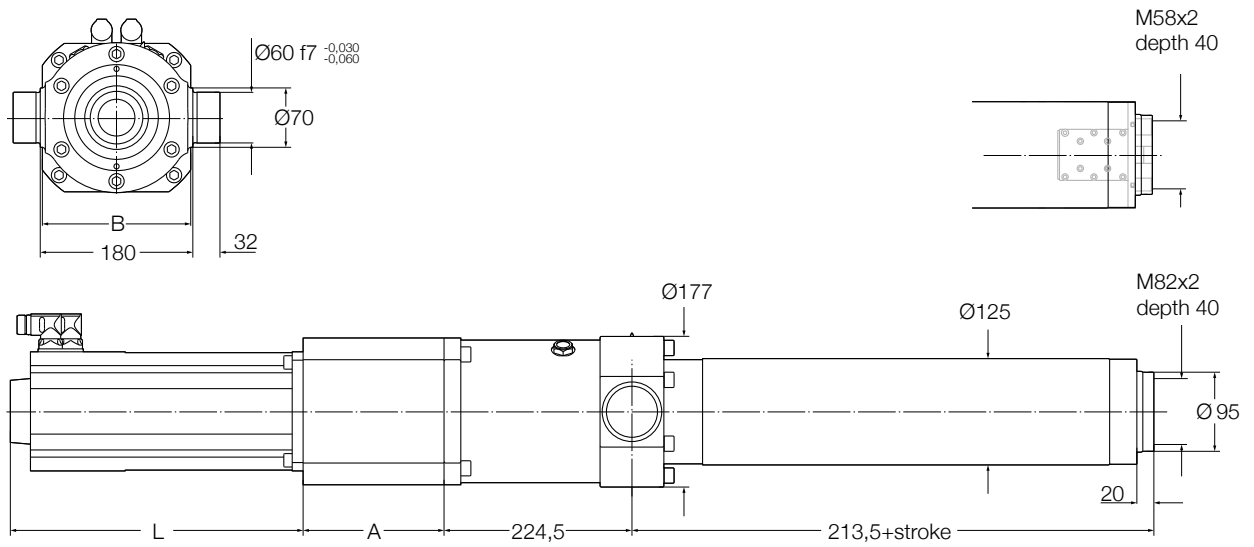

Reference	A	L	B	Added length for brake option	Added length for encoder option
–	mm				
L40LD1	206	476	192	28	50
L50LD2	239	544	192	28	50
L10LD6	178	427	192	44	49
L70LD7	247	529	192	44	49

Performance diagrams

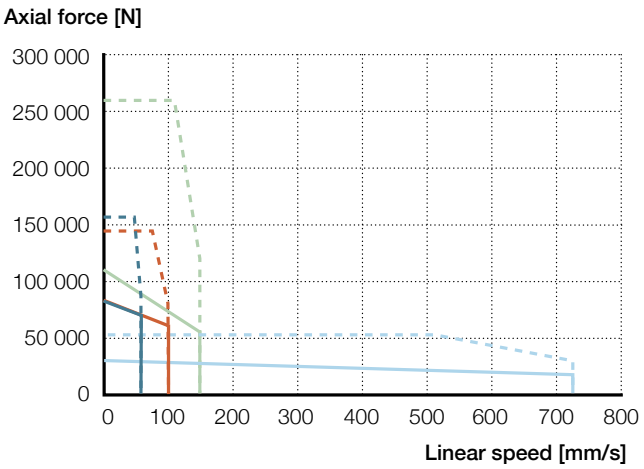

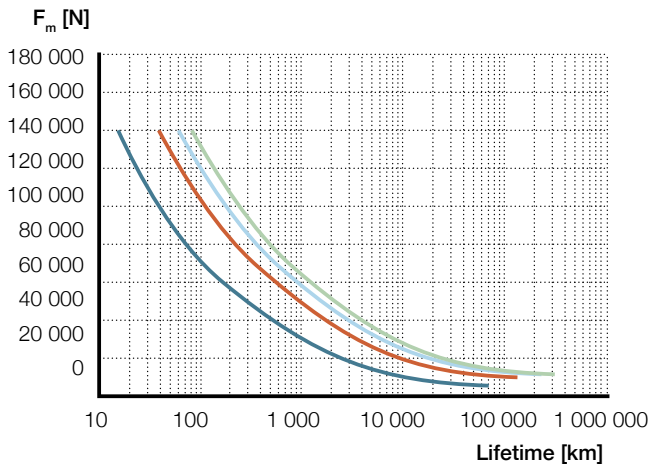

L40LD1	F_{cont}	L50LD2	F_{cont}
	F_{peak}		F_{peak}
L10LD6	F_{cont}	L70LD7	F_{cont}
	F_{peak}		F_{peak}

SRSA-4805	SRSA-4810
SRSA-4815	SRSA-4820

Ordering key

See **page 270**

SRSA-S-48xx

Electric cylinder servo motor, parallel configuration

Technical data

Designation	Symbol	Unit	Servo motor and parallel adapter			
			P40	P50	P10	P70
			LD1	LD2	LD6	LD7
Performance Data						
Continuous force @ zero speed	F_{c0}	kN	79,2	80,1	28,1	106,4
Continuous force @ max. speed	F_c	kN	70,9	59,2	17,3	53,2
Peak force @ zero speed	F_{p0}	kN	152,1	140,6	50,3	251,8
Peak force @ max. speed	F_p	kN	81,9	78,2	28,4	113,8
Dynamic load capacity	C	kN	198	232	258	261
Holding force (motorbrake option)	F_{Hold}	kN	155	86	18	98
Max. linear speed	v_{max}	mm/s	58	100	713	143
Max. acceleration	a_{max}	m/s^2	0,9	1,4	10,1	1
Duty cycle	D	%	100	100	100	100
Mechanical Data						
Screw type	–	–	Roller screw	Roller screw	Roller screw	Roller screw
Screw diameter	d_{screw}	mm	48	48	48	48
Screw lead	p_{screw}	mm	5	10	15	20
Lead accuracy	–	–	G5	G5	G5	G5
Stroke[1]	s	mm	100…1 200	100…1 200	100…1 200	100…1 200
Internal overstroke each side	s_0	mm	5	5	5	5
Backlash[2]	$s_{backlash}$	mm	0	0	0	0
Gear reduction	i		4	5	1	7
Inertia @ 0 mm stroke	J	10^{-4} kgm^2	98,33	137,82	360,05	711,85
Δ Inertia per 100 mm stroke	ΔJ	10^{-4} kgm^2	0,26	0,16	4,12	0,08
Inertia of optional brake	J_{brake}	10^{-4} kgm^2	3,20	3,20	12,40	12,40
Weight @ 0 mm stroke	m	kg	114,6	126,3	134,6	174,6
Δ weight per 100 mm stroke	Δm	kg	5,7	5,7	5,7	5,7
Weight of optional brake	m_{brake}	kg	1,9	1,9	3,1	3,1
Weight of anti-rotation @ 0 mm stroke	m_{arot0}	kg	3,6	3,6	3,6	3,6
Δ Weight of anti-rot. per 100 mm stroke	Δm_{arot}	kg	0,7	0,7	0,7	0,7
Electrical Data						
Motor type	–	–	Servo	Servo	Servo	Servo
Nominal voltage	U	V AC	400	400	400	400
Nominal current	I	A	16,5	26,7	44,7	34,9
Peak current	I_{peak}	A	39,6	56	94	94
Nominal power	P	kW	5,96	8,01	15,82	10,05
Environment and Standards						
Ambient temperature	$T_{ambient}$	°C	0…+40	0…+40	0…+40	0…+40
Degree of protection[3]	IP	–	54	54	54	54

[1] By 100 mm steps
[2] Backlash elimination up to stroke 600 mm. For longer strokes $s_{backlash}$ = 0,02 mm for screw lead 5, 0,04 mm for lead 10, and 0,07 for lead 15 & 20
[3] With anti-rotation option IP44

Dimensional drawing

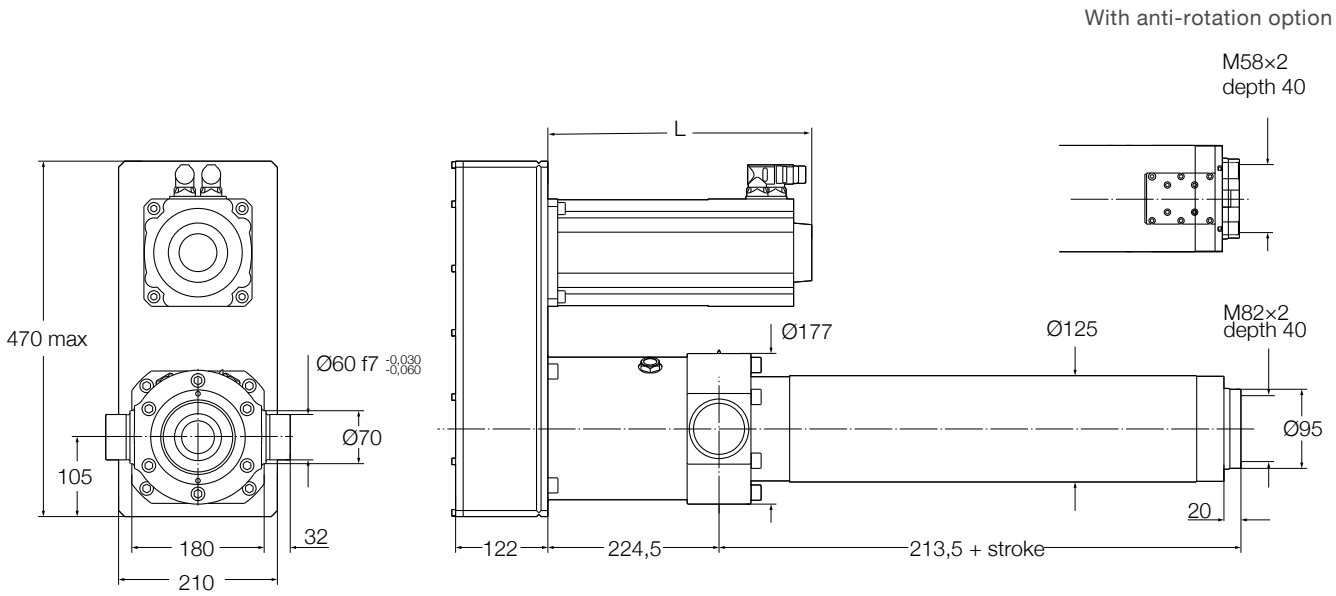

Reference	L	Added length for brake option	Added length for encoder option
–	mm		
P40LD1	476	28	50
P50LD2	544	28	50
P10LD6	427	44	49
P70LD7	529	44	49

Performance diagrams

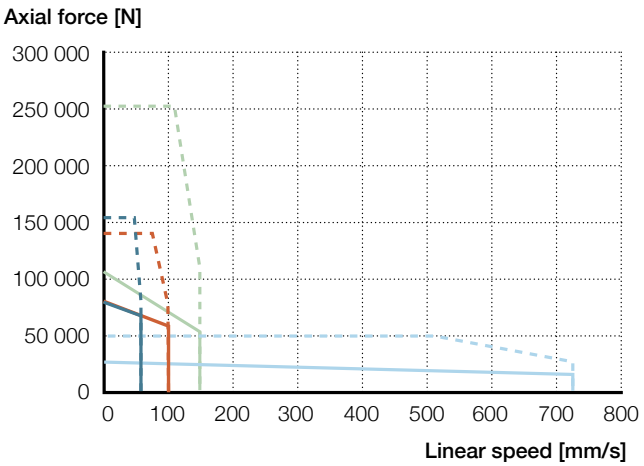

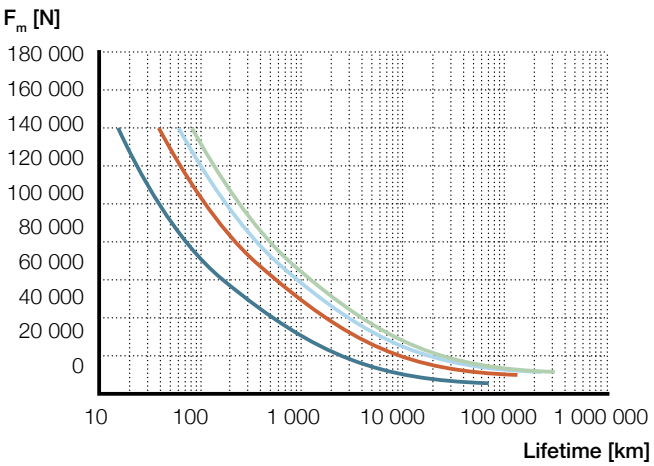

P40LD1 — F_{cont} — F_{peak}
P50LD2 — F_{cont} — F_{peak}
P10LD6 — F_{cont} — F_{peak}
P70LD7 — F_{cont} — F_{peak}

SRSA-4805
SRSA-4810
SRSA-4815
SRSA-4820

Ordering key

See **page 270**

SRSA-S-60xx

Electric cylinder servo motor, inline configuration

Technical data

Designation	Symbol	Unit	Servo motor and inline adapter		
			L50	L30	L70
			LD5	LD6	LD7
Performance Data					
Continuous force @ zero speed	F_{c0}	kN	120,6	83,3	109,7
Continuous force @ max. speed	F_c	kN	68,6	51,3	54,8
Peak force @ zero speed	F_{p0}	kN	199,7	149,2	259,6
Peak force @ max. speed	F_p	kN	145,5	84,2	117,4
Dynamic load capacity	C	kN	339	373	395
Holding force (motorbrake option)	F_{Hold}	kN	144	55	95
Max. linear speed	v_{max}	mm/s	100	238	143
Max. acceleration	a_{max}	m/s^2	2	5,2	3,5
Duty cycle	D	%	100	100	100
Mechanical Data					
Screw type	–	–	Roller screw	Roller screw	Roller screw
Screw diameter	d_{screw}	mm	60	60	60
Screw lead	p_{screw}	mm	10	15	20
Lead accuracy	–	–	G5	G5	G5
Stroke[1]	s	mm	100…1 300	100…1 300	100…1 300
Internal overstroke each side	s_0	mm	10	10	10
Backlash[2]	$s_{backlash}$	mm	0	0	0
Gear reduction	i		5	3	7
Inertia @ 0 mm stroke	J	10^{-4} kgm^2	134,01	236,18	194,51
Δ Inertia per 100 mm stroke	ΔJ	10^{-4} kgm^2	0,40	1,12	0,21
Inertia of optional brake	J_{brake}	10^{-4} kgm^2	12,40	12,40	12,40
Weight @ 0 mm stroke	m	kg	165,1	181,1	197,2
Δ weight per 100 mm stroke	Δm	kg	8,9	8,9	8,9
Weight of optional brake	m_{brake}	kg	3,1	3,1	3,1
Weight of anti-rotation @ 0 mm stroke	m_{arot0}	kg	5,2	5,2	5,2
Δ Weight of anti-rot. per 100 mm stroke	Δm_{arot}	kg	0,8	0,8	0,8
Electrical Data					
Motor type	–	–	Servo	Servo	Servo
Nominal voltage	U	V AC	400	400	400
Nominal current	I	A	30,5	44,7	34,9
Peak current	I_{peak}	A	56	94	94
Nominal power	P	kW	9,11	15,82	10,05
Environment and Standards					
Ambient temperature	$T_{ambient}$	°C	0…+40	0…+40	0…+40
Degree of protection[3]	IP	–	54	54	54

[1] By 100 mm steps
[2] Backlash elimination up to stroke 800 mm. For longer strokes $s_{backlash}$ =0,04 mm for screw lead 10, and 0,07 for lead 15 & 20
[3] With anti-rotation option IP44

Dimensional drawing

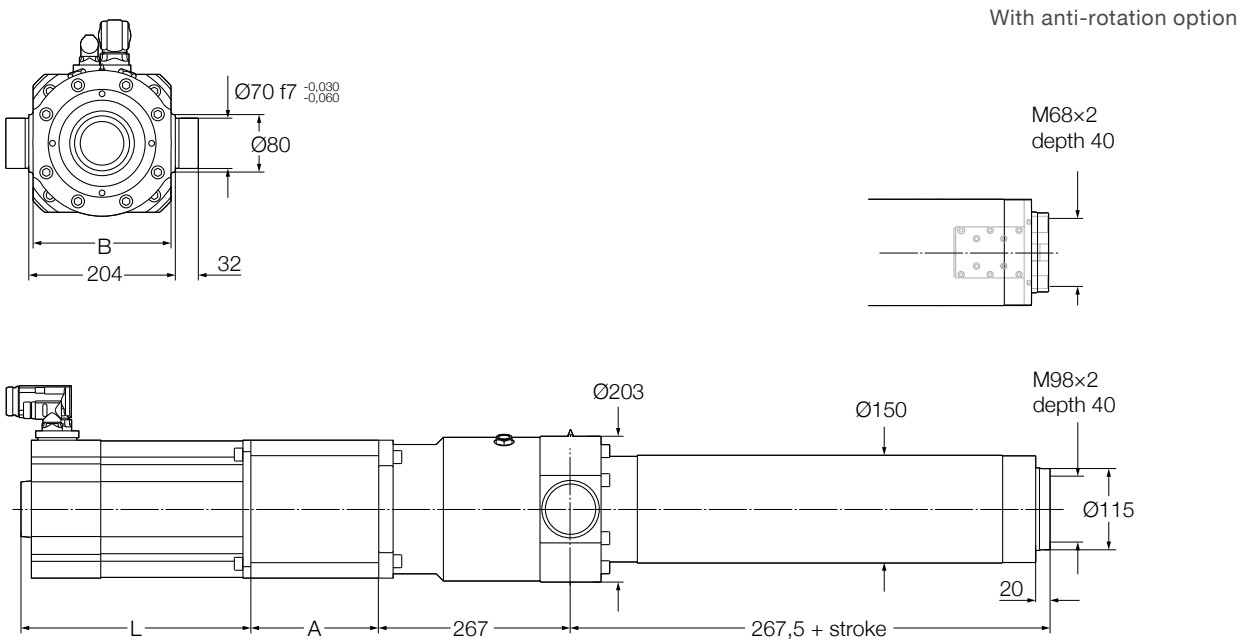

Reference	A	L	B	Added length for brake option	Added length for encoder option
–	mm				
L50LD5	240	435	192	44	49
L30LD6	240	602	192	44	49
L70LD7	248	529	192	44	49

Performance diagrams

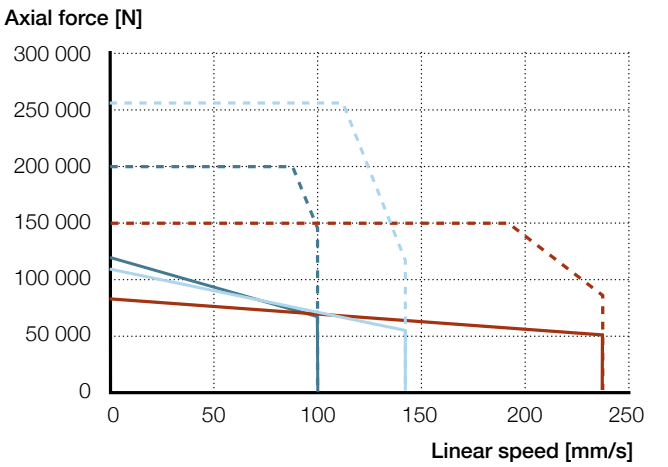

L50LD5 — F_{cont} - - - F_{peak} L30LD6 — F_{cont} - - - F_{peak} L70LD7 — F_{cont} - - - F_{peak}

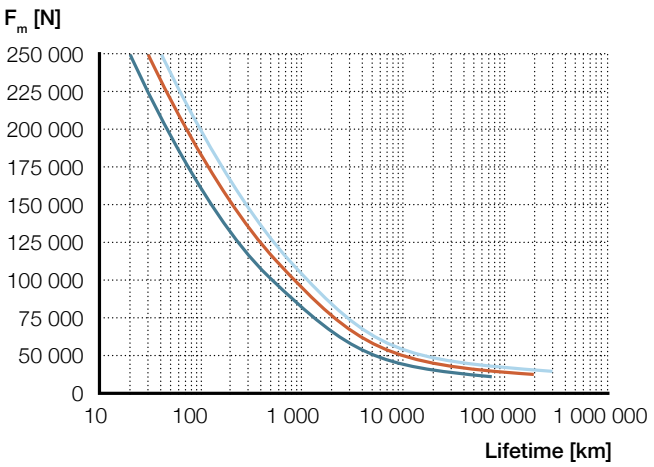

SRSA-6010 — SRSA-6015 — SRSA-6020

Ordering key

See **page 270**

SRSA-S-60xx

Electric cylinder servo motor, parallel configuration

Technical data

Designation	Symbol	Unit	Servo motor and parallel adapter		
			P50	P30	P70
			LD5	LD6	LD7
Performance Data					
Continuous force @ zero speed	F_{c0}	kN	117	80,8	106,4
Continuous force @ max. speed	F_c	kN	66,5	49,8	53,2
Peak force @ zero speed	F_{p0}	kN	193,7	144,7	251,8
Peak force @ max. speed	F_p	kN	141,1	81,7	113,8
Dynamic load capacity	C	kN	339	373	395
Holding force (motorbrake option)	F_{Hold}	kN	149	57	98
Max. linear speed	v_{max}	mm/s	100	238	143
Max. acceleration	a_{max}	m/s^2	0,6	2,2	1
Duty cycle	D	%	100	100	100
Mechanical Data					
Screw type	–	–	Roller screw	Roller screw	Roller screw
Screw diameter	d_{screw}	mm	60	60	60
Screw lead	p_{screw}	mm	10	15	20
Lead accuracy	–	–	G5	G5	G5
Stroke[1]	s	mm	100…1 300	100…1 300	100…1 300
Internal overstroke each side	s_0	mm	10	10	10
Backlash[2]	$s_{backlash}$	mm	0	0	0
Gear reduction	i		5	3	7
Inertia @ 0 mm stroke	J	10^{-4} kgm^2	463,12	557,95	714,38
Δ Inertia per 100 mm stroke	ΔJ	10^{-4} kgm^2	0,40	1,12	0,21
Inertia of optional brake	J_{brake}	10^{-4} kgm^2	12,40	12,40	12,40
Weight @ 0 mm stroke	m	kg	173,3	187	206
Δ weight per 100 mm stroke	Δm	kg	8,9	8,9	8,9
Weight of optional brake	m_{brake}	kg	3,1	3,1	3,1
Weight of anti-rotation @ 0 mm stroke	m_{arot0}	kg	5,2	5,2	5,2
Δ Weight of anti-rot. per 100 mm stroke	Δm_{arot}	kg	0,8	0,8	0,8
Electrical Data					
Motor type	–	–	Servo	Servo	Servo
Nominal voltage	U	V AC	400	400	400
Nominal current	I	A	30,5	44,7	34,9
Peak current	I_{peak}	A	56	94	94
Nominal power	P	kW	9,11	15,82	10,05
Environment and Standards					
Ambient temperature	$T_{ambient}$	°C	0…+40	0…+40	0…+40
Degree of protection[3]	IP	–	54	54	54

[1] By 100 mm steps
[2] Backlash elimination up to stroke 800 mm. For longer strokes $s_{backlash}$ = 0,04 mm for screw lead 10, and 0,07 for lead 15 & 20
[3] With anti-rotation option IP44

Dimensional drawing

With anti-rotation option

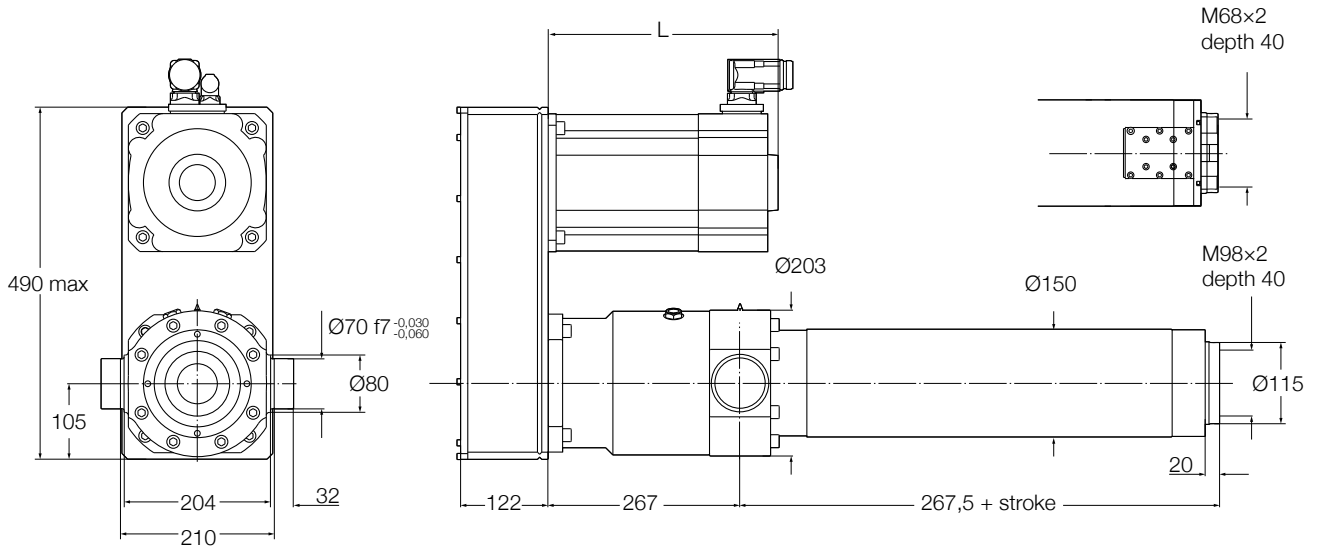

Reference	L	Added length for brake option	Added length for encoder option
–	mm		
P50LD5	435	44	49
P30LD6	602	44	49
P70LD7	529	44	49

Performance diagrams

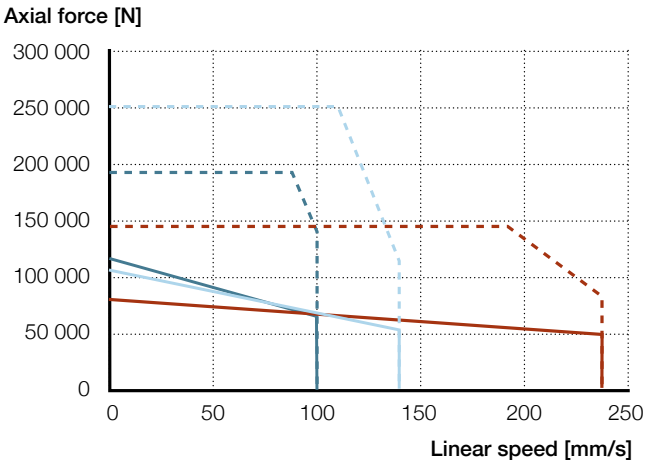

P50LD5 — F_{cont} - - - F_{peak} P30LD6 — F_{cont} - - - F_{peak} P70LD7 — F_{cont} - - - F_{peak}

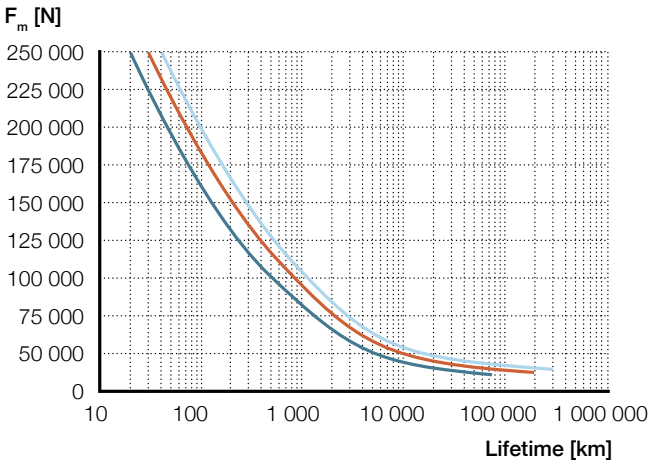

SRSA-6010 — SRSA-6015 — SRSA-6020

Ordering key

See **page 270**

SRSA-S-75xx

Electric cylinder servo motor, inline configuration

Technical data

Designation	Symbol	Unit	Servo motor and inline adapter		
			L70	L30	L70
			LD7	LD6	LD6
Performance Data					
Continuous force @ zero speed	F_{c0}	kN	207	82,3	145,7
Continuous force @ max. speed	F_c	kN	103,5	50,7	89,8
Peak force @ zero speed	F_{p0}	kN	490	147,5	261,1
Peak force @ max. speed	F_p	kN	221,5	83,3	147,4
Dynamic load capacity	C	kN	505	561	572
Holding force (motorbrake option)	F_{Hold}	kN	210	56	96
Max. linear speed	v_{max}	mm/s	71	238	136
Max. acceleration	a_{max}	m/s^2	1,7	4,3	3,4
Duty cycle	D	%	100	100	100
Mechanical Data					
Screw type	–	–	Roller screw	Roller screw	Roller screw
Screw diameter	d_{screw}	mm	75	75	75
Screw lead	p_{screw}	mm	10	15	20
Lead accuracy	–	–	G5	G5	G5
Stroke[1]	s	mm	100…1 500	100…1 500	100…1 500
Internal overstroke each side	s_0	mm	10	10	10
Backlash[2]	$s_{backlash}$	mm	0	0	0
Gear reduction	i		7	3	7
Inertia @ 0 mm stroke	J	10^{-4} kgm^2	263,61	285,71	203,61
Δ Inertia per 100 mm stroke	ΔJ	10^{-4} kgm^2	0,50	2,73	0,44
Inertia of optional brake	J_{brake}	10^{-4} kgm^2	12,40	12,40	12,40
Weight @ 0 mm stroke	m	kg	292,1	277,8	298,1
Δ weight per 100 mm stroke	Δm	kg	11,3	11,3	11,3
Weight of optional brake	m_{brake}	kg	3,1	3,1	3,1
Weight of anti-rotation @ 0 mm stroke	m_{arot0}	kg	7,5	7,5	7,5
Δ Weight of anti-rot. per 100 mm stroke	Δm_{arot}	kg	2,7	2,7	2,7
Electrical Data					
Motor type	–	–	Servo	Servo	Servo
Nominal voltage	U	V AC	400	400	400
Nominal current	I	A	34,9	44,7	44,7
Peak current	I_{peak}	A	94	94	94
Nominal power	P	kW	10,05	15,82	15,82
Environment and Standards					
Ambient temperature	$T_{ambient}$	°C	0…+40	0…+40	0…+40
Degree of protection[3]	IP	–	54	54	54

[1] By 100 mm steps
[2] Backlash elimination up to stroke 1 000 mm. For longer strokes $s_{backlash}$ = 0,04 mm for screw lead 10, and 0,07 for lead 15 & 20
[3] With anti-rotation option IP44

Dimensional drawing

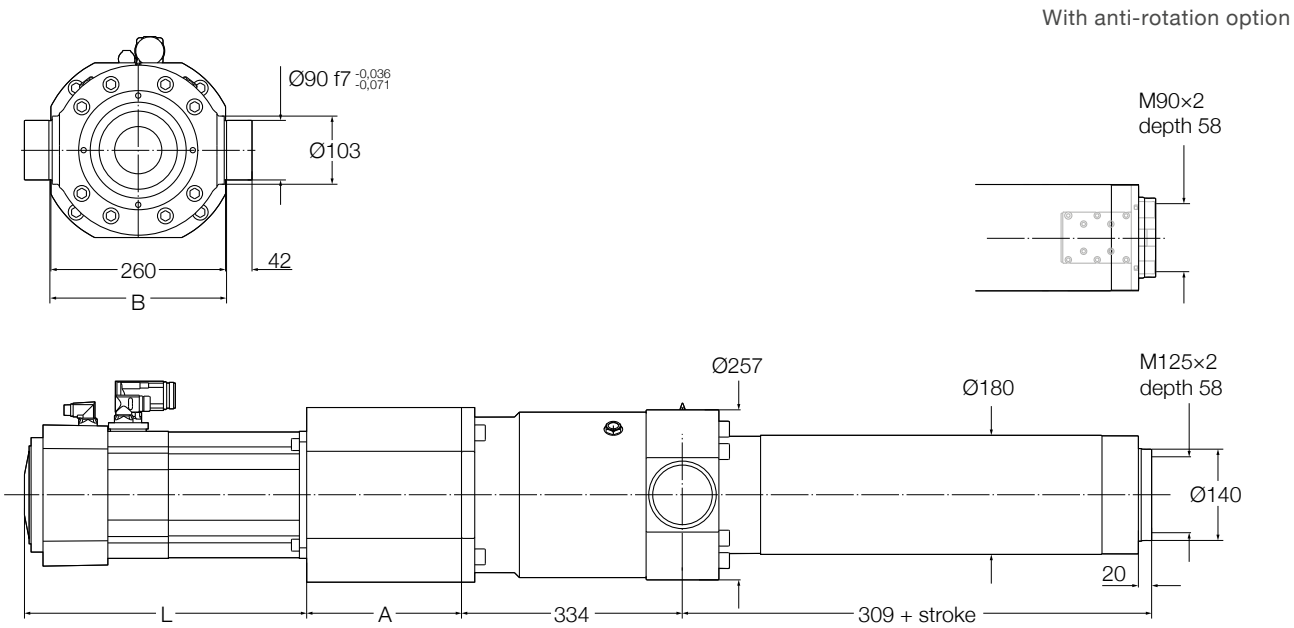

Reference	A	L	B	Added length for brake option	Added length for encoder option
–	mm				
L70LD7	247	529	264	44	49
L30LD6	239	602	264	44	49
L70LD6	247	636	264	44	49

Performance diagrams

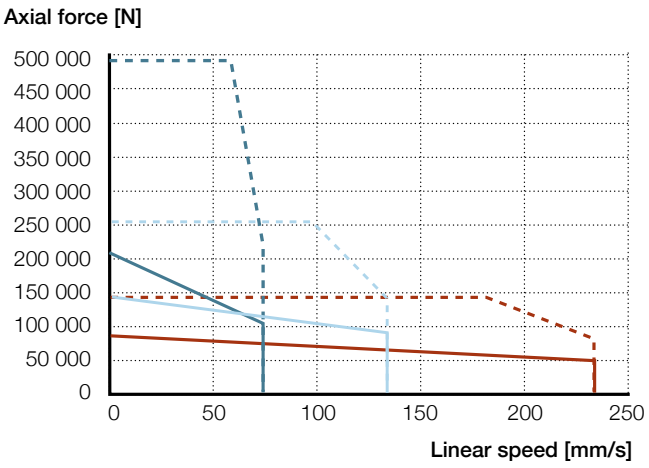

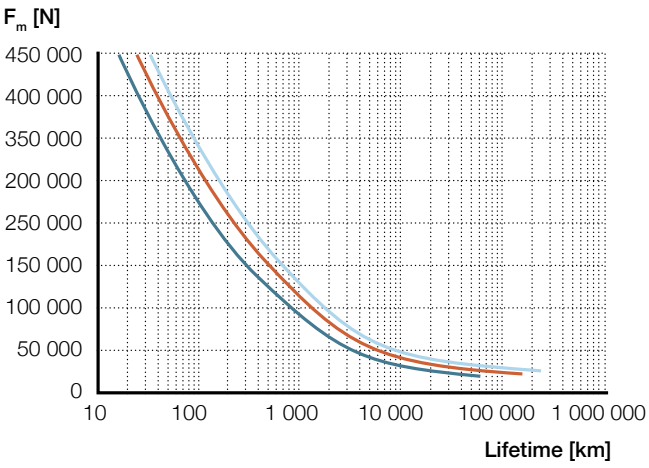

L70LD7 — F_{cont} — F_{peak} L30LD6 — F_{cont} — F_{peak} L70LD6 — F_{cont} — F_{peak}

SRSA-7510 — SRSA-7515 — SRSA-7520

Ordering key

See **page 270**

SRSA-S-75xx

Electric cylinder servo motor, parallel configuration

Technical data

Designation	Symbol	Unit	Servo motor and parallel adapter		
			P70	P30	P70
			LD7	LD6	LD6
Performance Data					
Continuous force @ zero speed	F_{c0}	kN	200,8	79,8	141,3
Continuous force @ max. speed	F_c	kN	100,4	49,2	87,1
Peak force @ zero speed	F_{p0}	kN	475,3	143,1	253,2
Peak force @ max. speed	F_p	kN	214,9	80,8	143
Dynamic load capacity	C	kN	505	561	572
Holding force (motorbrake option)	F_{Hold}	kN	216	58	99
Max. linear speed	v_{max}	mm/s	71	238	136
Max. acceleration	a_{max}	m/s^2	0,5	2	1
Duty cycle	D	%	100	100	100
Mechanical Data					
Screw type	–	–	Roller screw	Roller screw	Roller screw
Screw diameter	d_{screw}	mm	75	75	75
Screw lead	p_{screw}	mm	10	15	20
Lead accuracy	–	–	G5	G5	G5
Stroke[1]	s	mm	100…1 500	100…1 500	100…1 500
Internal overstroke each side	s_0	mm	10	10	10
Backlash[2]	$s_{backlash}$	mm	0	0	0
Gear reduction	i		7	3	7
Inertia @ 0 mm stroke	J	10^{-4} kgm^2	723,5	607,59	723,5
Δ Inertia per 100 mm stroke	ΔJ	10^{-4} kgm^2	0,50	2,73	0,44
Inertia of optional brake	J_{brake}	10^{-4} kgm^2	12,40	12,40	12,40
Weight @ 0 mm stroke	m	kg	303,5	284,6	309,5
Δ weight per 100 mm stroke	Δm	kg	11,3	11,3	11,3
Weight of optional brake	m_{brake}	kg	3,1	3,1	3,1
Weight of anti-rotation @ 0 mm stroke	m_{arot0}	kg	7,5	7,5	7,5
Δ Weight of anti-rot. per 100 mm stroke	Δm_{arot}	kg	2,7	2,7	2,7
Electrical Data					
Motor type	–	–	Servo	Servo	Servo
Nominal voltage	U	V AC	400	400	400
Nominal current	I	A	34,9	44,7	44,7
Peak current	I_{peak}	A	94	94	94
Nominal power	P	kW	10,05	15,82	15,82
Environment and Standards					
Ambient temperature	$T_{ambient}$	°C	0…+40	0…+40	0…+40
Degree of protection[3]	IP	–	54	54	54

[1] By 100 mm steps
[2] Backlash elimination up to stroke 1 000 mm. For longer strokes $s_{backlash}$ = 0,04 mm for screw lead 10, and 0,07 for lead 15 & 20
[3] With anti-rotation option IP44

Dimensional drawing

With anti-rotation option

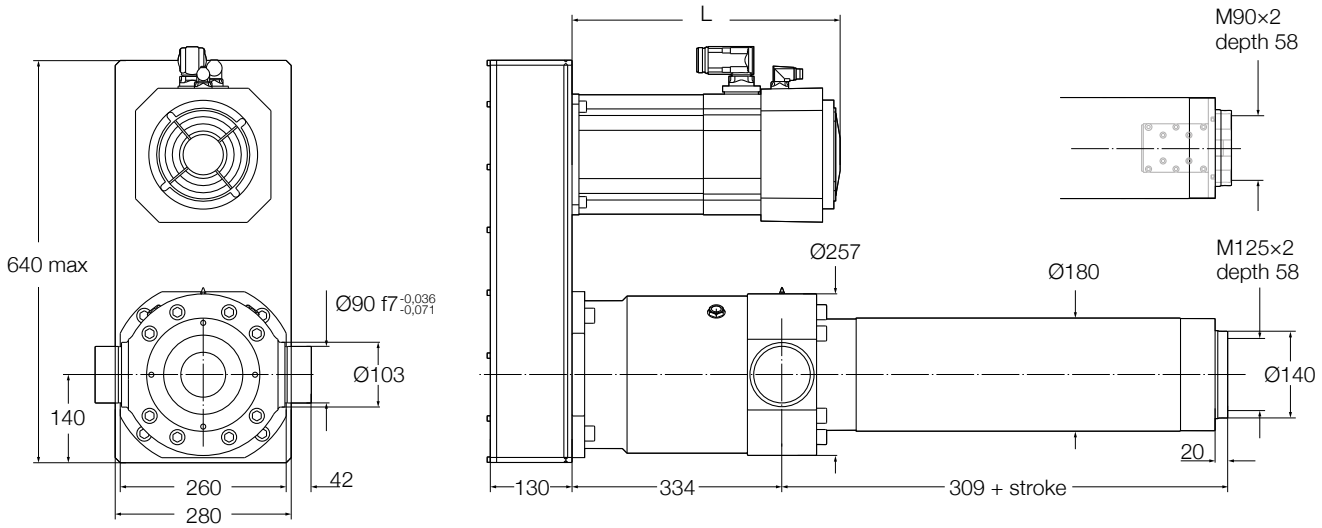

Reference	L	Added length for brake option	Added length for encoder option
–	mm		
P70LD7	529	44	49
P30LD6	602	44	49
P70LD6	636	44	49

Performance diagrams

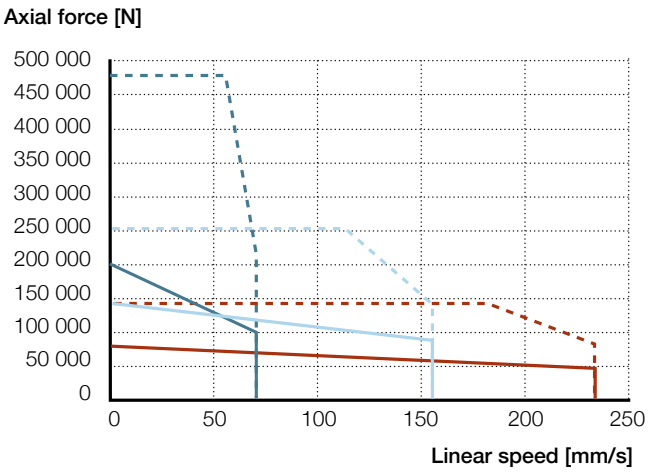

P70LD7 — F_{cont} — F_{peak}
P30LD6 — F_{cont} — F_{peak}
P70LD6 — F_{cont} — F_{peak}

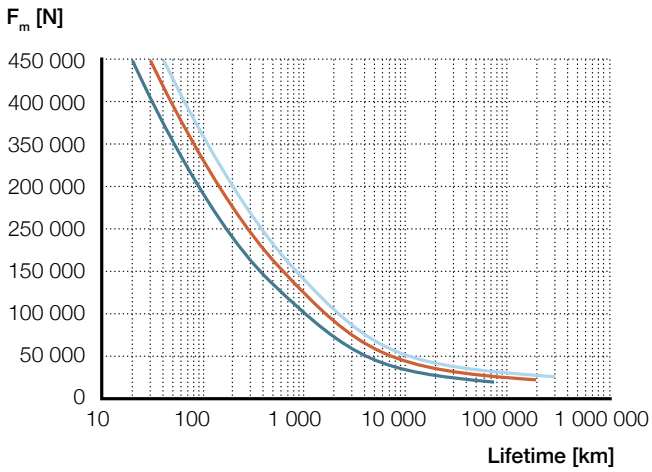

SRSA-7510 — SRSA-7515 — SRSA-7520

Ordering key

See **page 270**

SVSA-S-xx01

Electric cylinder servo motor, inline configuration

Technical data

Designation	Symbol	Unit	Servo motor and inline adapter		
			L10	L10	L10
			LC7	LA1	LA5
Performance Data					
Continuous force @ zero speed	F_{c0}	kN	13,8	19,2	40
Continuous force @ max. speed	F_c	kN	10,2	16,5	36
Peak force @ zero speed	F_{p0}	kN	42,8	54,1	93
Peak force @ max. speed	F_p	kN	18,7	18,3	45,3
Dynamic load capacity	C	kN	64	79	174
Holding force (motorbrake option)	F_{Hold}	kN	64	79,0	174
Max. linear speed	v_{max}	mm/s	10,4	8,3	6,7
Max. acceleration	a_{max}	m/s^2	0,6	0,6	0,6
Duty cycle	D	%	100	100	100
Mechanical Data					
Screw type	–	–	Roller screw	Roller screw	Roller screw
Screw diameter	d_{screw}	mm	32	40	50
Screw lead	p_{screw}	mm	1	1	1
Lead accuracy	–	–	G5	G5	G5
Stroke[1]	s	mm	100…600	100…800	100…900
Internal overstroke each side	s_0	mm	5	5	5
Backlash[3]	$s_{backlash}$	mm	0	0	0
Gear reduction	i		1	1	1
Inertia @ 0 mm stroke	J	10^{-4} kgm^2	8,88	19,95	40,82
Δ Inertia per 100 mm stroke	ΔJ	10^{-4} kgm^2	0,31	0,64	1,8
Inertia of optional brake	J_{brake}	10^{-4} kgm^2	1,07	1,07	1,07
Weight @ 0 mm stroke	m	kg	19,1	30,1	62,4
Δ weight per 100 mm stroke	Δm	kg	2,4	3,2	4,8
Weight of optional brake	m_{brake}	kg	0,8	0,9	0,9
Weight of anti-rotation @ 0 mm stroke	m_{arot0}	kg	2,6	–0,3	–0,3
Δ Weight of anti-rot. per 100 mm stroke	Δm_{arot}	kg	0,3	0,2	0,4
Electrical Data					
Motor type	–	–	Servo	Servo	Servo
Nominal voltage	U	V AC	400	400	400
Nominal current	I	A	3	2,7	6,2
Peak current	I_{peak}	A	12,8	10	26,8
Nominal power	P	kW	1,22	1,12	2,76
Environment and Standards					
Ambient temperature	$T_{ambient}$	°C	0…+40	0…+40	0…+40
Degree of protection[2]	IP	–	54	54	54

[1] By 100 mm steps
[2] With anti-rotation option IP44
[3] Backlash elimination up to stroke 600 mm. For longer strokes $s_{backlash}$ = 0,02 mm

Dimensional drawing

SVSA-S-3201

With anti-rotation option

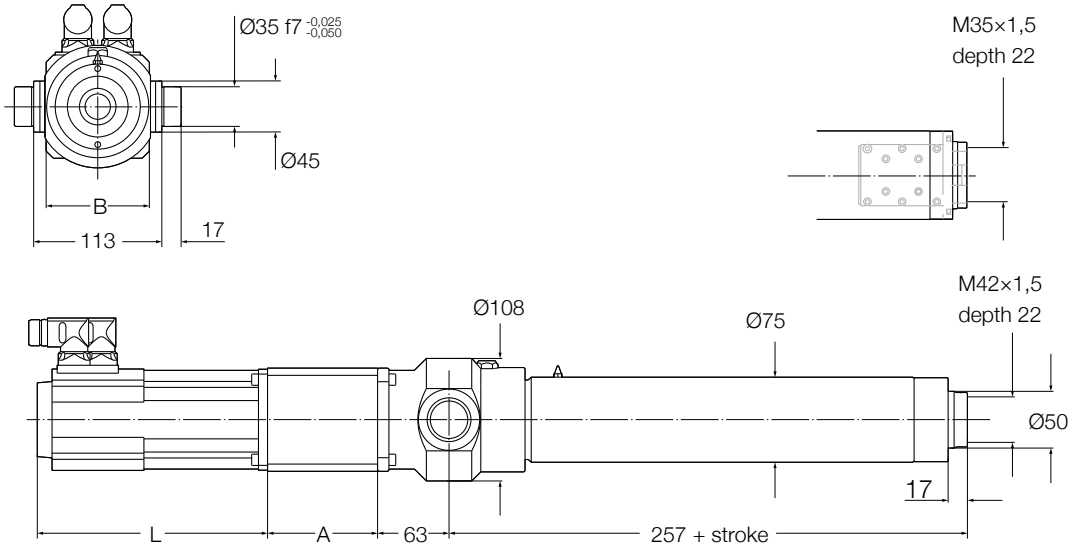

Reference	A	L	B	Added length for brake option	Added length for encoder option
–	mm				
L10LC7	97	203	91	20	51

SVSA-S-4001

With anti-rotation option

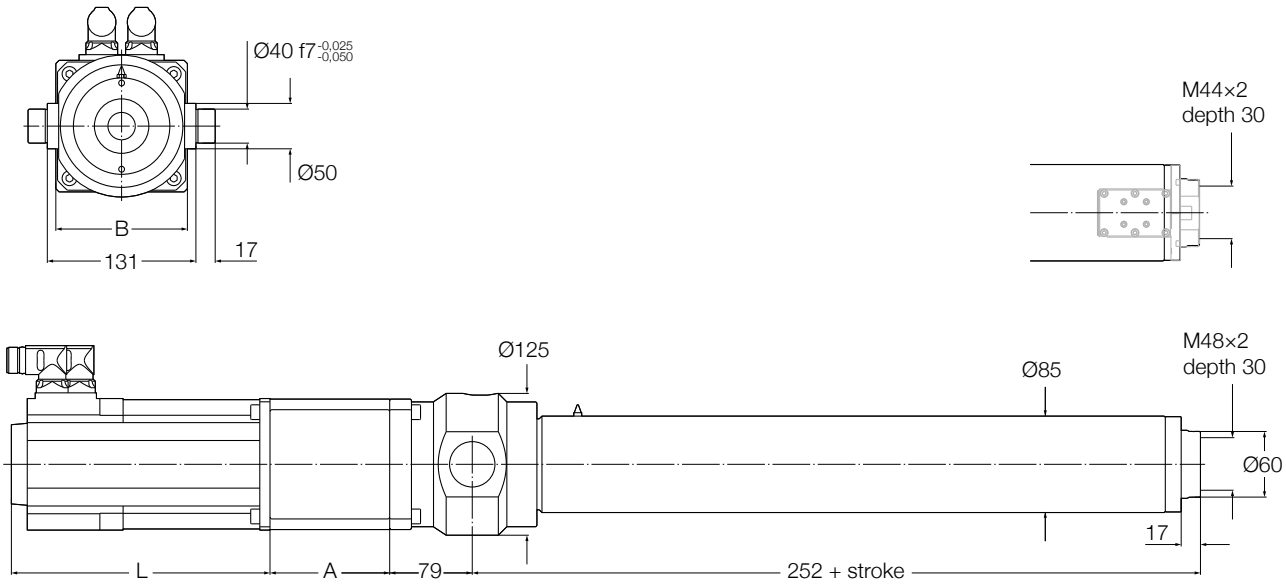

Reference	A	L	B	Added length for brake option	Added length for encoder option
–	mm				
L10LA1	111	188	116	20	49

SVSA-S-5001

With anti-rotation option

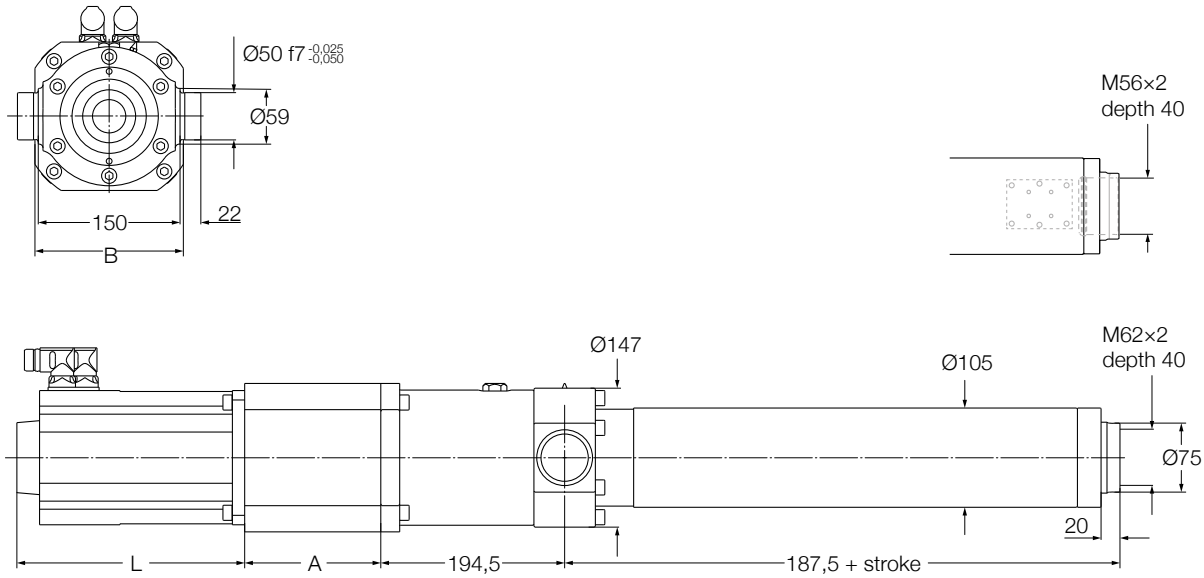

Reference	A	L	B	Added length for brake option	Added length for encoder option
–	mm				
L10LA5	134	268	185	20	49

Performance diagrams

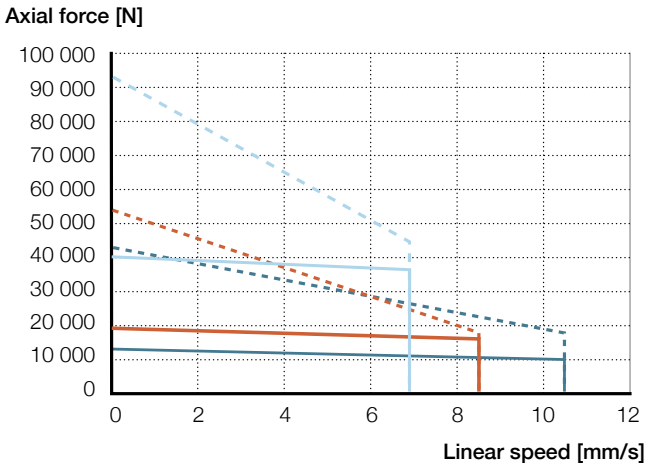

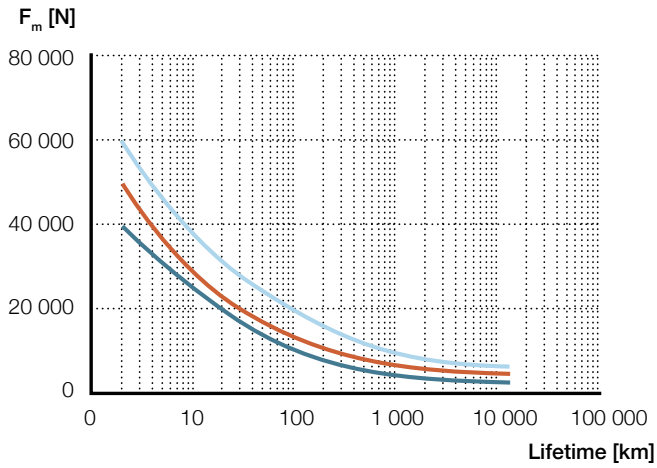

L10LC7 — F_{cont} - - - F_{peak} L10LA1 — F_{cont} - - - F_{peak} L10LA5 — F_{cont} - - - F_{peak}

SVSA-3201 — SVSA-4001 — SVSA-5001

Ordering key

See **page 270**

EWELLIX

SVSA-S-xx01

Electric cylinder servo motor, parallel configuration

Technical data

Designation	Symbol	Unit	Servo motor and inline adapter		
			P10	P10	P10
			LC7	LA1	LA5
Performance Data					
Continuous force @ zero speed	F_{c0}	kN	13,4	18,7	38,8
Continuous force @ max. speed	F_c	kN	9,9	16	34,9
Peak force @ zero speed	F_{p0}	kN	41,5	52,5	90,2
Peak force @ max. speed	F_p	kN	18,2	17,8	43,9
Dynamic load capacity	C	kN	64	79	174
Holding force (motorbrake option)	F_{Hold}	kN	64	79	174
Max. linear speed	v_{max}	mm/s	10,4	8,3	6,7
Max. acceleration	a_{max}	m/s^2	0,6	0,6	0,6
Duty cycle	D	%	100	100	100
Mechanical Data					
Screw type	–	–	Roller screw	Roller screw	Roller screw
Screw diameter	d_{screw}	mm	32	40	50
Screw lead	p_{screw}	mm	1	1	1
Lead accuracy	–	–	G5	G5	G5
Stroke[1]	s	mm	100…600	100…800	100…900
Internal overstroke each side	s_0	mm	5	5	5
Backlash[3]	$s_{backlash}$	mm	0	0	0
Gear reduction	i		1	1	1
Inertia @ 0 mm stroke	J	10^{-4} kgm^2	7,70	17,25	47,65
Δ Inertia per 100 mm stroke	ΔJ	10^{-4} kgm^2	0,31	0,64	1,80
Inertia of optional brake	J_{brake}	10^{-4} kgm^2	1,07	1,07	1,07
Weight @ 0 mm stroke	m	kg	24	34,9	70,3
Δ weight per 100 mm stroke	Δm	kg	2,4	3,2	4,8
Weight of optional brake	m_{brake}	kg	0,8	0,9	0,9
Weight of anti-rotation @ 0 mm stroke	m_{arot0}	kg	2,6	–0,3	–0,3
Δ Weight of anti-rot. per 100 mm stroke	Δm_{arot}	kg	0,3	0,2	0,4
Electrical Data					
Motor type	–	–	Servo	Servo	Servo
Nominal voltage	U	V AC	400	400	400
Nominal current	I	A	3	2,7	6,2
Peak current	I_{peak}	A	12,8	10	26,8
Nominal power	P	kW	1,220	1,120	2,760
Environment and Standards					
Ambient temperature	$T_{ambient}$	°C	0…+40	0…+40	0…+40
Degree of protection[2]	IP	–	54	54	54

[1] By 100 mm steps
[2] With anti-rotation option IP44
[3] Backlash elimination up to stroke 600 mm. For longer strokes $s_{backlash}$ = 0,02 mm

Dimensional drawing

SVSA-S-3201

With anti-rotation option

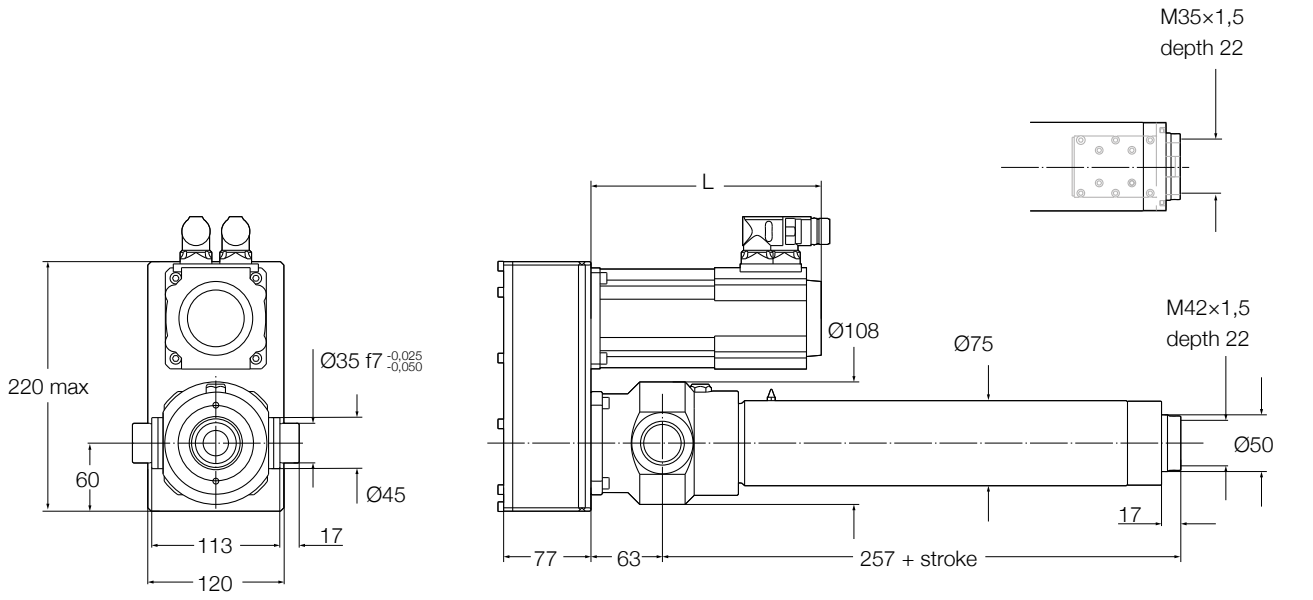

Reference	L	Added length for brake option	Added length for encoder option
–	mm		
P10LC7	203	20	51

SVSA-S-4001

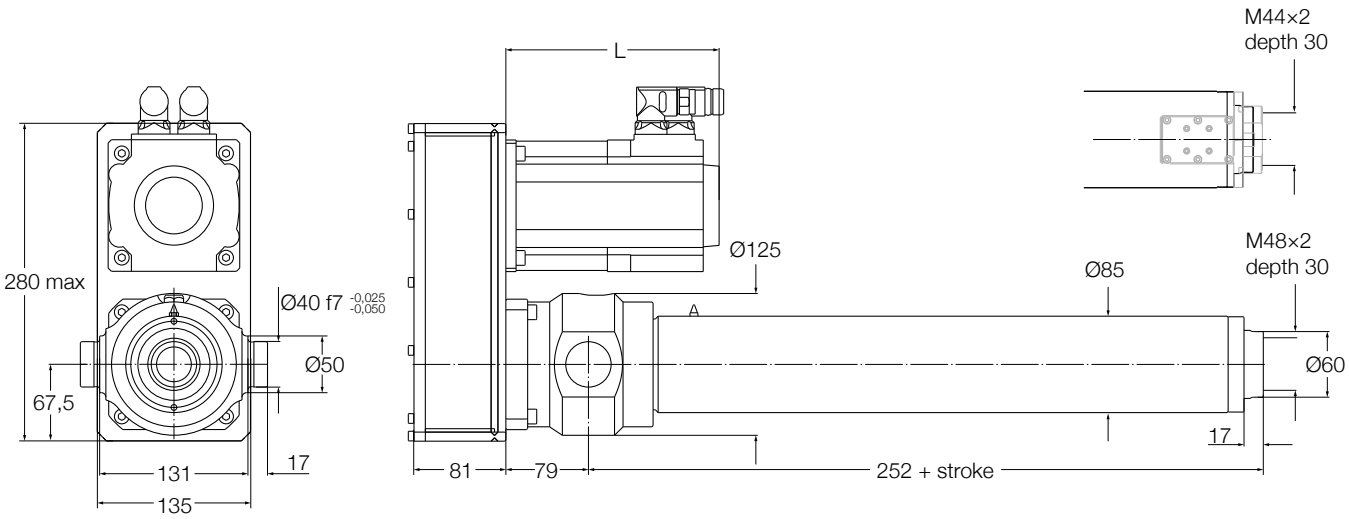

Reference	L	Added length for brake option	Added length for encoder option
–	mm		
P10LA1	188	20	49

SVSA-S-5001

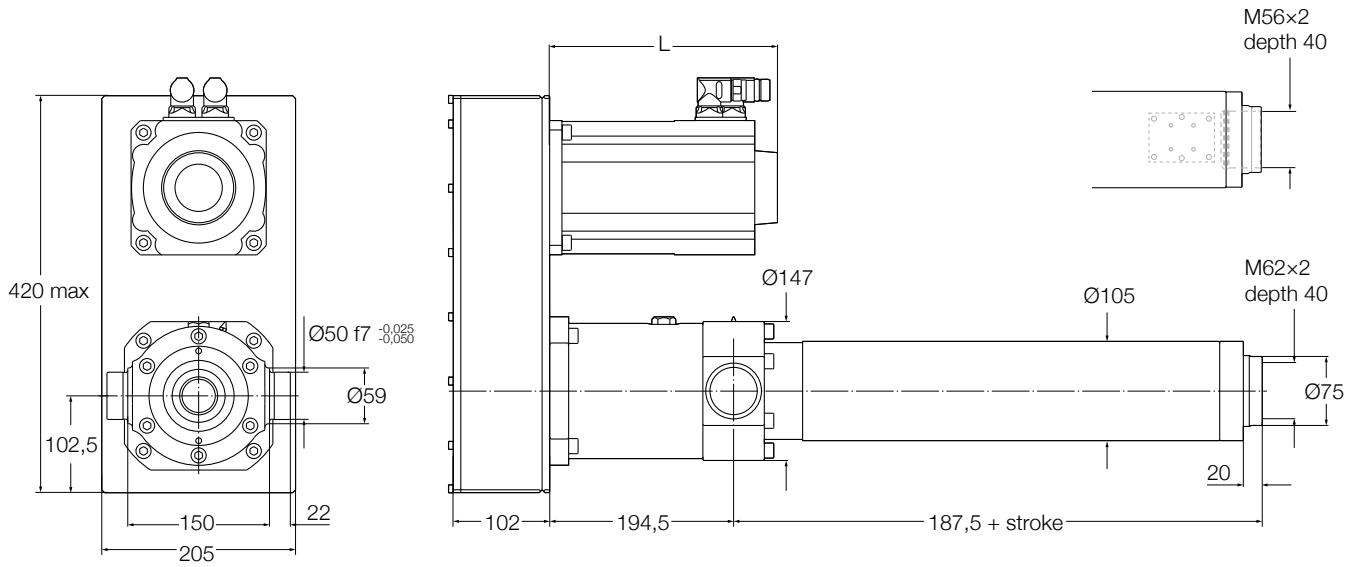

Reference	L	Added length for brake option	Added length for encoder option
–	mm		
P10LA5	268	20	49

Performance diagrams

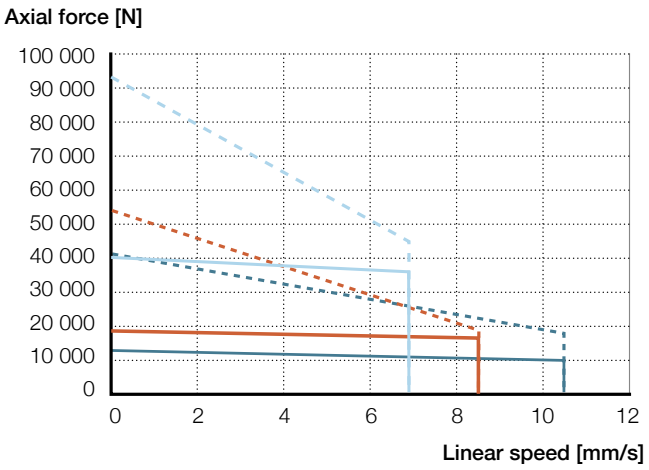

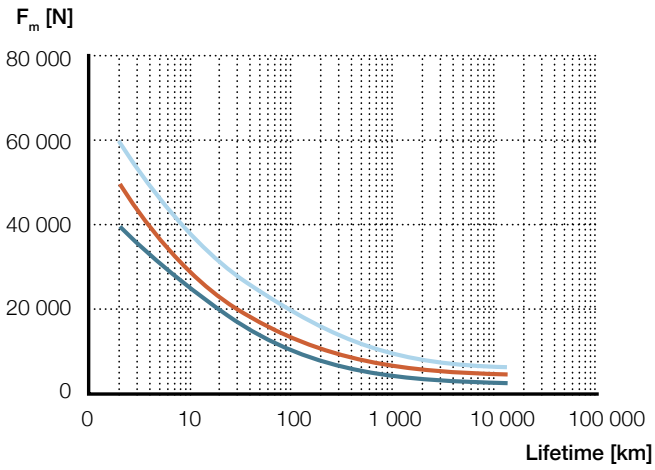

P10LC7 — F_{cont} - - F_{peak} P10LA1 — F_{cont} - - F_{peak} P10LA5 — F_{cont} - - F_{peak}

SVSA-3201 — SVSA-4001 — SVSA-5001

Ordering key

See **page 270**

Ordering key

Actuator with servo motors

S R S A - S - 4 8 1 0 - 0 2 0 0 - T R A F - L 0 1 0 L A 2 1 B Y A 1

Type
R Planetary roller screw
V Recirculating roller screw

Servomotor

Screw diameter

Screw lead

Stroke

Rear attachment
T Trunnions
Z Special
N No attachment

Front attachment
R Rod end
F Rod end with fork
Z Non standard
N No attachment (female thread)

Anti-rotation
A Anti-rotation
N No anti-rotation

Limit switches
F 2 limit switches and 1 home switch
S 2 limit switches only
M 1 limit switch and 1 home switch
L 1 limit switch only
H 1 home switch only
N No switch

SRSA - S - 4810 - 0200 - TRAF - L010LA21BYA1

Interface and gear ratio
See **pages 233** and **234**

Motor
See **pages 233** and **234**

Feedback

1	Resolver
2	Absolute encoder Hiperface
3	Absolute encoder Endat

EM brake

B	Brake 24 V DC
N	No brake

Motor drive

Y	Drive included
N	No drive

Drive fieldbus

A	CanOpen
B	DeviceNet
C	EtherCAT
D	Ethernet
E	Powerlink MN/CN
F	Powerlink CN
G	Profibus
H	Profinet
N	No fieldbus

Power and signal cables

1	5 m
2	10 m
3	15 m
4	20 m
N	No cable

Front attachment

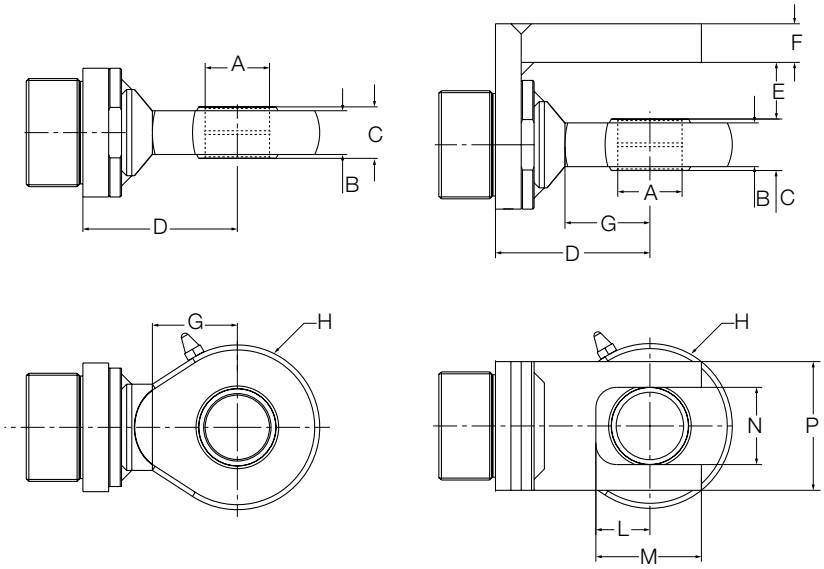

Type –	F_{max} kN	A[1)] mm	B	C	D	E	F	G	H	L	M	N	P
SVSA-x-32xx	25	Ø25	17	20 $^{0}_{-0,12}$	60	22	15	33	Ø64	21	41	30 H9	50
SVSA-x-40xx	33	Ø30	19	22 $^{0}_{-0,12}$	71	24	15	37,5	Ø73	23	45	35 H9	60
SRSA-x-39xx/SVSA-x-50xx	46	Ø40	23	28 $^{0}_{-0,12}$	89	30	15	48	Ø92	29	58	45 H9	75
SRSA-x-48xx	77	Ø50	30	35 $^{0}_{-0,12}$	110	38	15	59	Ø112	36	71	55 H9	95
SRSA-x-60xx	117	Ø60	38	44 $^{0}_{-0,12}$	122	46	15	72,5	Ø135	43	83	65 H9	115
SRSA-x-75xx	192	Ø80	47	55 $^{0}_{-0,12}$	168	50	15	98	Ø180	50	95	85 H9	140

[1)] Rod-end inner diameter A tolerance: m6.
Tolerance of axis which will be inserted in rod-end has to be in accordance with recommendations given in SKF spherical plain bearings and rod-end catalogue - publication PUB BU/P1 06116/1 EN.

4

Customized solutions

Up to 65% weight saving
Up to 100mm/s high speed
pillars

EWELLIX

Servo pillar CPSM

Features

- High dynamic servo or brushless DC motor for high speed up to 100 mm/s
- High performance ball screw for high load capacity up to 5 kN
- Extruded alumium proiles for a very robust design
- Manually adjusted gliders for very high stiffness and high excentric loads
- Encoder system of the motor and high quality gearbox enable high positioning accuracy and high repeatability (0,1 mm)

Benefits

- High nominal power of the motor allows for high duty cycle of the pillar
- Customized motor adapter for highest flexibility (max. motor diameter 90 mm)
- Customized top and bottom plate to fit most of the applications
- Customized aluminum profile colour (anodized) to fit application design needs
- Optional brake to release the motor when it's in position and to increase the duty cycle
- Preloaded bearing arrangement also for ceiling mount applications (only available without damping system)

Product description

Telescopic pillars CPSM are the ideal solution to combine strong guiding functions with linear movements.

The robust, manually adjusted and virtually backlash-free aluminum extrusions are able to carry high excentric loads in push and pull directions.

To provide enough power to lift and lower heavy weights with high speed, the pillars are equipped with brushless DC or servo motors. Of course, Ewellix also supports the usage of preferred motors with a customizable motor interface.

Optional brakes and damping elements are key features that allow an effective usage in heavy duty industrial applications.

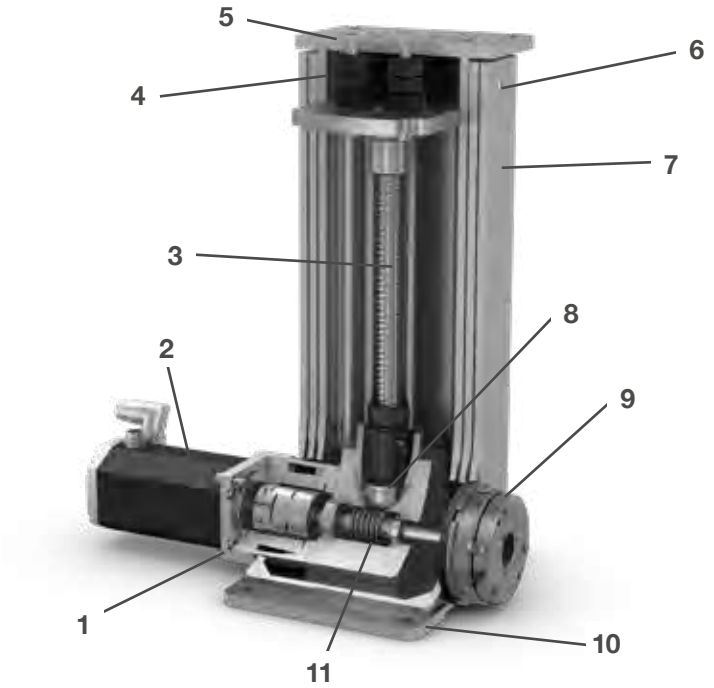

1. Standard or customized motor interface
2. Motor (Brushless DC or servo AC)
3. High eficiency ball screw
4. Optional damping system
5. Customized top plate
6. Backlash-free long lasting guiding pads
7. 2 or 3 section extruded aluminum guiding tubes
8. Preloaded bearing arrangement
9. Optional electromechanical brake
10. Customized bottom plate
11. Low friction worm gear reduction

CPSM

Servo pillar

Technical data

Designation	Symbol	Unit	w/o motor	BG75	1FK7034
Performance Data					
Continuous force @ zero speed	F_{c0}	kN	5	4,013	5
Continuous force @ max. speed	F_c	kN	5	4,013	4,013
Peak force @ zero speed	F_{p0}	kN	5	5	5
Peak force @ max. speed	F_p	kN	5	5	5
Dynamic load capacity	C	kN	21	21	21
Holding force (motorbrake option)	$F_{Hold-MB}$	kN	N/A	5	5
Holding force (external brake option)	$F_{Hold-EB}$	kN	5	5	5
Max. linear speed	v_{max}	mm/s	–	62	100
Max. acceleration	a_{max}	m/s^2	6	6	6
Duty cycle	D	%	100	100	100
Mechanical Data					
Screw type	–	–	Ball screw	Ball screw	Ball screw
Screw diameter	d_{screw}	mm	20	20	20
Screw lead	p_{screw}	mm	10	10	10
Lead accuracy	–	–	G7	G7	G7
Stroke[1)]	s	mm	100…700	100…700	100…700
Internal overstroke each side	s_0	mm	1	1	1
Backlash	$s_{backlash}$	mm	0,07	0,07	0,07
Gear reduction	i	-	10	10	10
Efficiency	η	%	58	52	51
Electrical Data					
Motor type	–	–	N/A	Brushless DC	Servo
Nominal voltage	U	V DC	N/A	40	N/A
Nominal current	I	A	N/A	12,7	1,3
Peak current	I_{peak}	A	N/A	10,8	1,9
Nominal power	P	kW	N/A	0,45	0,6
Environment					
Ambient temperature	$T_{ambient}$	°C	0…+50	0…+50	0…+50
Max. humidity	ϕ	%	95	95	95

[1)] By 100 mm steps

Ordering key

See **page 281**

Dimensional drawing

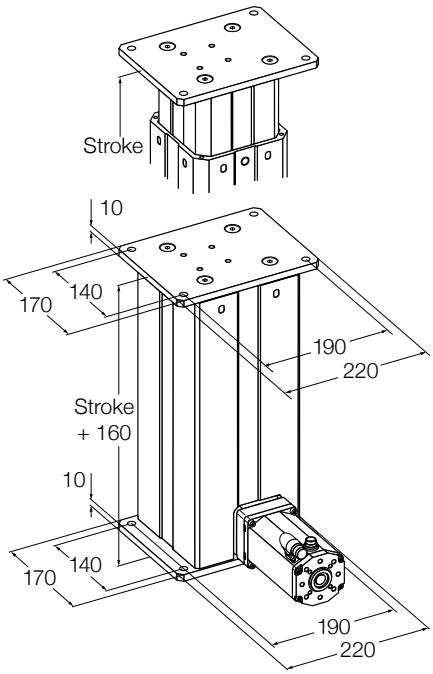

Performance diagram

Pillar output speed [mm/s]

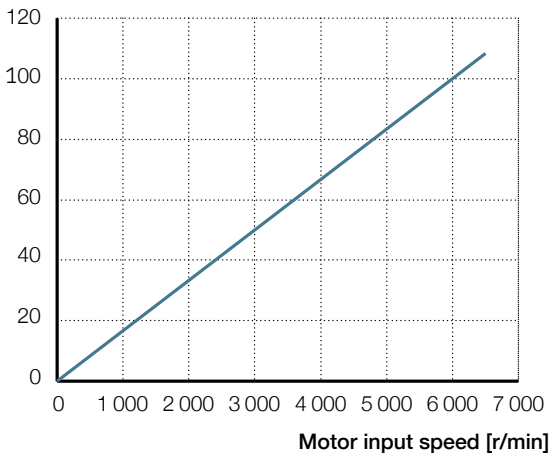

Performance diagrams

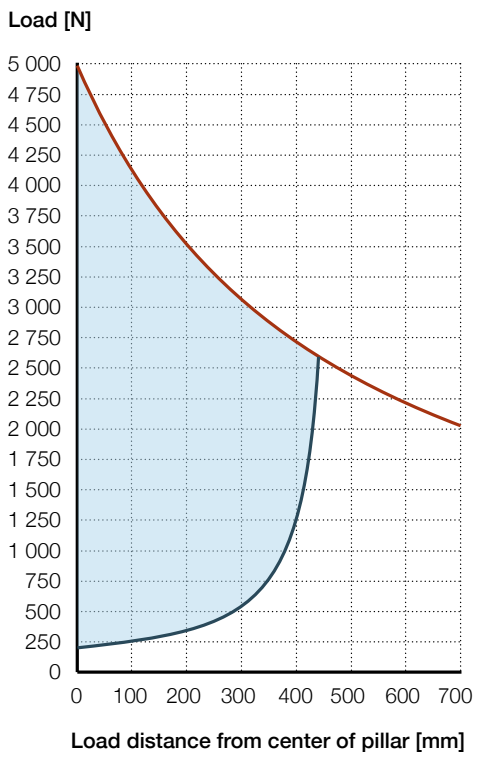

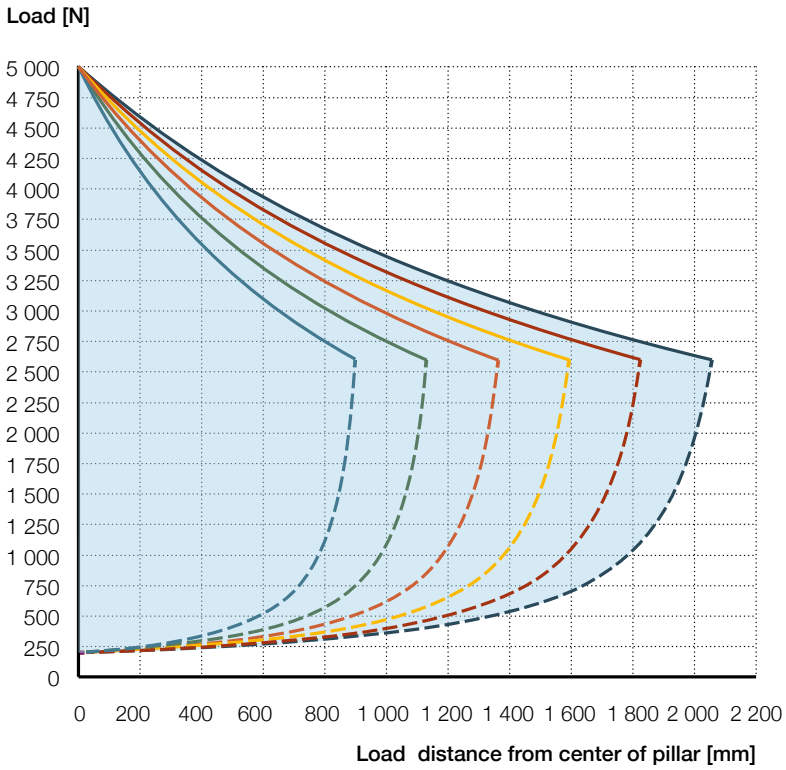

Over load limit stroke 200	Over load limit stroke 400	Over load limit stroke 600
Under load limit stroke 200	Under load limit stroke 400	Under load limit stroke 600
Over load limit stroke 300	Over load limit stroke 500	Over load limit stroke 700
Under load limit stroke 300	Under load limit stroke 500	Under load limit stroke 700

Adapter for third-party motors

In order to attach your preferred motor to the pillar, Ewellix offers tailormadesolutions within the specifications below. For motor speciications which are not covered by those below, please contact Ewellix.

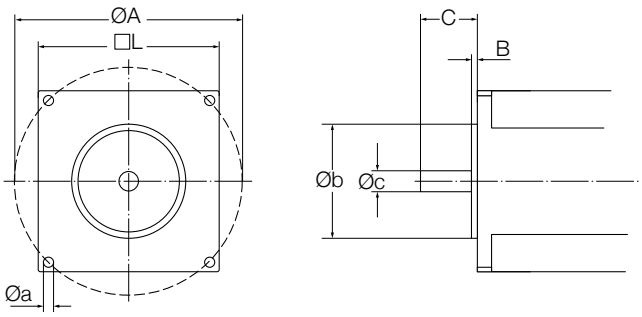

Designation	Symbol	Unit	Min.	Max.
Motor housing	□L	mm	60	95
Motor centering	Øb	mm	47	95
Centering height	B	mm	1	5
Fixing diameter	ØA	mm	52	103
Shaft diameter	Øc	mm	11	19
Shaft lenght	C	mm	15	48

Ordering key

Linear units

C P S M 1 0 - B N - 1 0 - D 0 3 0 0 - 0 0 0 - A M - 0 0 0

Type

Tube size
10 L-Size tube[1)]

Screw type
BN Ball screw 20×10
- - Other, on request

Worm gear
10 Worm gear ratio 1:10
- - Other, on request

Tube set
A 2-section
D 3-section

Stroke
100 mm
200 mm
300 mm
400 mm
500 mm
600 mm
700 mm
- - Other, on request

Dampening element
0 Without dampening element (retracted length = stroke + 160 mm)
W With dampening element (retracted length = stroke + 212 mm)

External brake
0 Without electromechanical brake
24 With electromechanical holding brake 24VDC
- - Customized brake on request

Motor and Adapter
AA Motor, adapter separately delivered
AM Motor, adapter mounted

[1)] 3- sections: □ 163 mm / 2-sections: □ 146 m

Servo actuator SEMC

Features

- High performance roller screw for high speed (up to 600 mm/s) and acceleration (up to 9,5 m/s^2) requests
- High dynamic servomotor for high speed and acceleration requests
- Optional anti-rotation device
- Adjustable external proximity switches
- Optional lubricant for food grease compatibility
- Optional fail safe brake, absolute encoder on servomotor
- Recirculation roller screw with low lead (up to 1 mm) available on demand

Benefits

- Long lifetime, thanks to roller screw technology
- Aluminium body to save kg and limit total weight of the actuator
- Customized motor adapter for highest flexibility (max motor section 90 mm)
- Compact solution with high power density

Product description

In addition to standard electrical cylinder product range, Ewellix offers an extensive customization program that is able to fulfill specific application needs. This is important for Ewellix recognition as a knowledge engineering company and solution provider.

The SEMC actuator is one of the customized solutions designed by Ewellix. The application requirements consisted of a dimensionally compact and lightweight actuator with a long lifetime, high speed and high acceleration.

The Ewellix solution is based on a BRC15 × 5 or 8 roller screw, with a full aluminium body, resulting in a very compact solution weighing less than 7 kg including the motor, but robust thanks to the roller screw technology used inside.

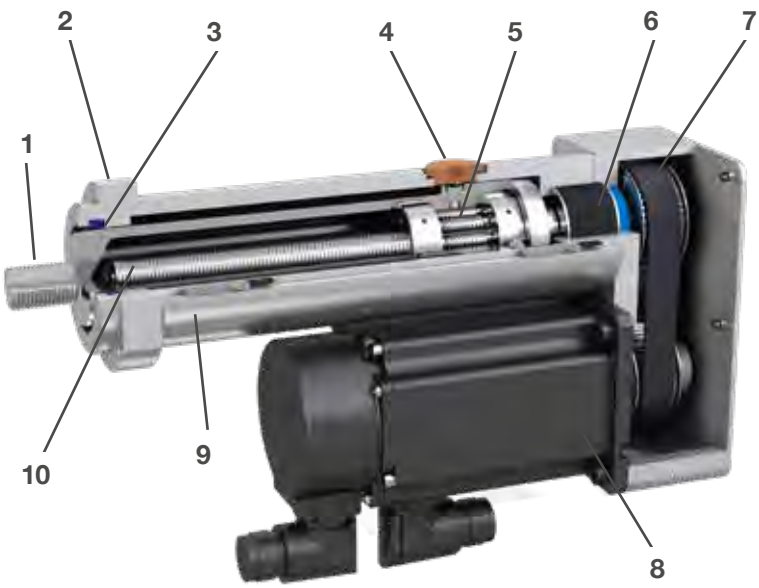

1. Male thread on push rod (customization upon request)
2. Front mount
3. Scraper on the front to keep out contaminants
4. Plug for direct grease access on roller screw nut body
5. High quality Ewellix planetary roller screw with backlash elimination
6. High quality SKF bearings
7. Pulleys/belt transmission (ratio 1:1)
8. Servomotor
9. Aluminium body
10. Steel push rod

SEMC

Linear unit

Technical data

Designation	Symbol	Unit	SEMC1505 w/o motor		SEMC1508 w/o motor	
			P10 interface	L10 interface	P10 interface	L10 interface
Performance data						
Max. dynamic axial force	F_{max}	kN	7,4	10	4,5	6,2
Max. dynamic axial force L10[1]	F_{L10}	kN	7,4	9	4,5	6,2
Max. static axial force	F_{0max}	kN	7,4	10	4,5	6,2
Dynamic load capacity	C	kN	26	26	27,4	27,4
Maximum torque to reach F_{max}	M_{max}	Nm	7,5	10	7,5	10
Max. linear speed	V_{max}	mm/s	375	375	600	600
Max. rotational speed	n_{max}	1/min	4 500	4 500	4 500	4 500
Max. acceleration	a_{max}	m/s^2	6	6	9,5	9,5
Duty cycle	D_{unit}	%	100	100	100	100
Mechanical Data						
Screw type	–	–	Roller screw	Roller screw	Roller screw	Roller screw
Screw diameter	d_{screw}	mm	15	15	15	15
Screw lead	p_{screw}	mm	5	5	8	8
Lead accuracy	–	–	G5	G5	G5	G5
Stroke	s	mm	up to 125	up to 125	up to 125	up to 125
Internal overstroke each side	s_0	mm	2	2	2	2
Backlash	$s_{backlash}$	mm	0	0	0	0
Efficiency	η_{lu}	%	78	80	77	79
Gear reduction	ι	–	1	1	1	1
Weight @ 0 mm stroke	m_{lu}	kg	3,7	3,7	3,7	3,7
Δ Weight per 50 mm stroke	Δm	kg	0,4	0,4	0,4	0,4
Environment						
Ambient temperature	$T_{ambient}$	°C	0…+40	0…+40	0…+40	0…+40
Degree of protection	IP	–	54S	54S	54S	54S

[1] Maximum dynamic axial force usable to apply the theoretical lifetime calculation (L_{10})

Lifetime diagram

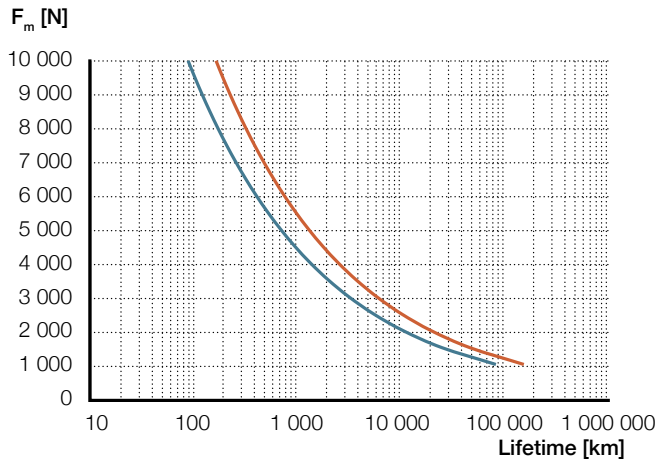

Screw lead 5 mm

Screw lead 8 mm

Dimensional drawing parallel configuration

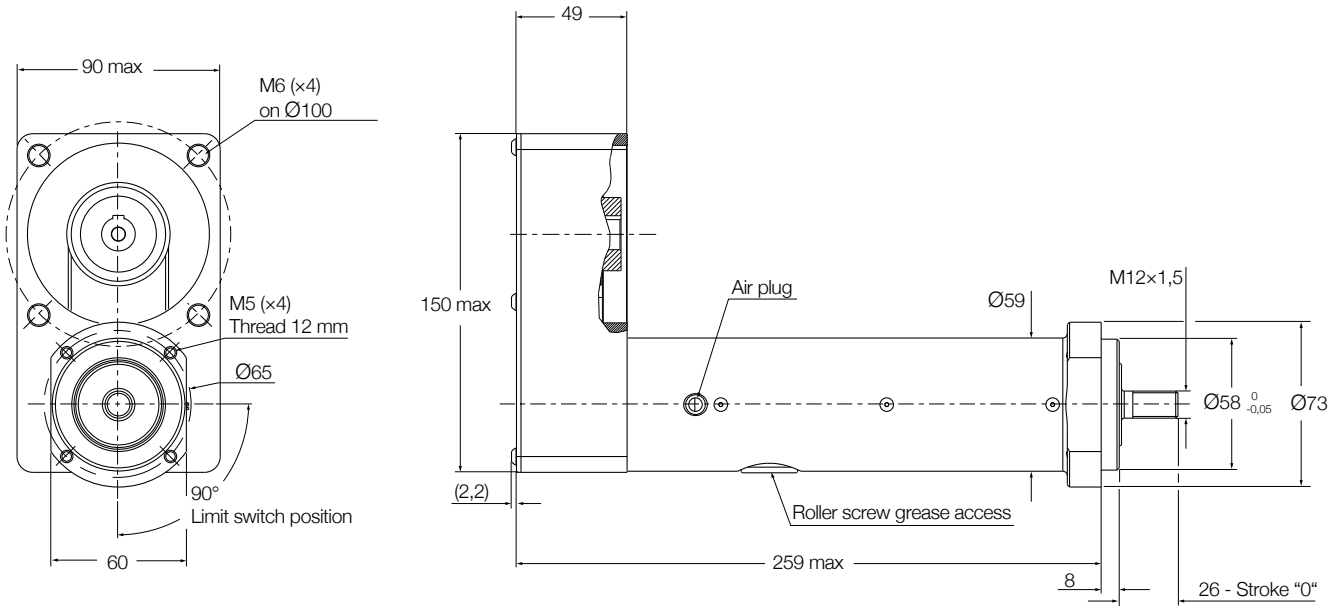

Dimensional drawing inline configuration

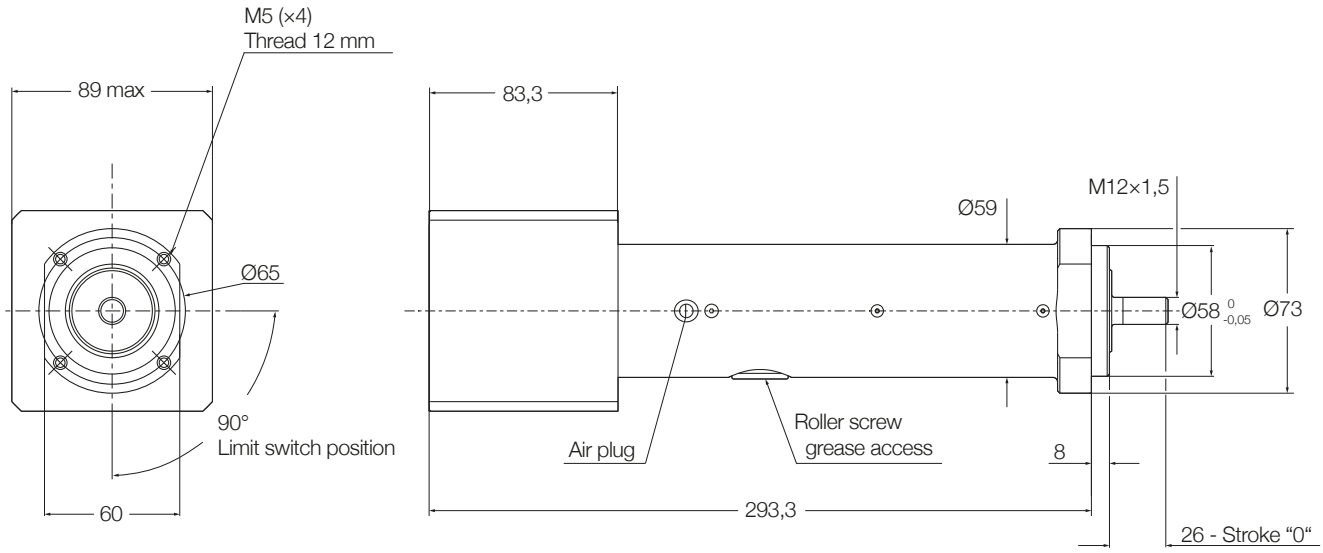

Ordering key

See **page 290**

SEMC

Servomotor, inline configuration

Technical data

Designation	Symbol	Unit	SEMC1505 Lenze MCS L10 interface	SEMC1508 Lenze MCS L10 interface
Performance data				
Continuous force @ zero speed	F_{c0}	kN	3,2	2,0
Continuous force @ max speed	F_c	kN	2,4	1,5
Peak force @ zero speed	F_{p0}	kN	7,9	4,8
Peak force @ max speed	F_p	kN	4,7	2,9
Dynamic load capacity	C	kN	26	27,4
Holding force (motorbrake option)	F_{hold}	kN	10	7,1
Max. linear speed	v_{max}	mm/s	300	480
Max. acceleration	a_{max}	m/s²	6	9,5
Duty cycle	D_{unit}	%	100	100
Mechanical Data				
Screw type	–	–	Roller screw	Roller screw
Screw diameter	d_{screw}	mm	15	15
Screw lead	p_{screw}	mm	5	8
Lead accuracy	–	–	G5	G5
Stroke	s	mm	up to 125	up to 125
Internal overstroke each side	s_0	mm	2	2
Backlash	$s_{backlash}$	mm	0	0
Gear reduction	i	–	1	1
Weight @ 0 mm stroke	m_{lu}	kg	8	8
Δ Weight per 50 mm stroke	Δ m	kg	0,4	0,4
Environment				
Ambient temperature	$T_{ambient}$	°C	0…+40	0…+40
Degree of protection	IP	–	54S	54S

Dimensional drawing

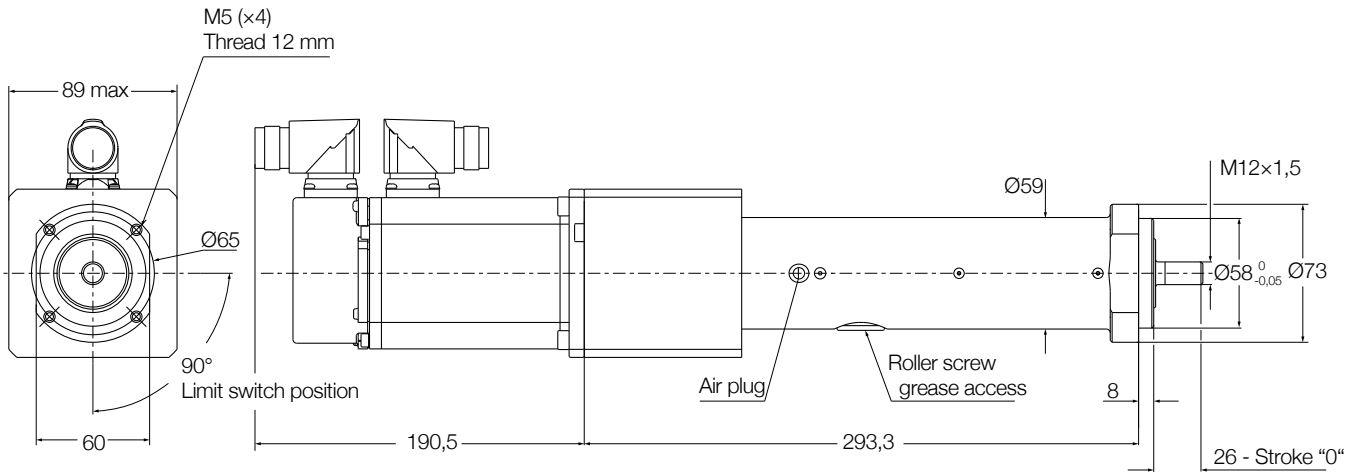

Drawing valid for a stroke of 125 mm (the maximum stroke on SEMC)
For brake option, add 20 mm on the servomotor length
For brake option, add 0,8 kg
For absolute encoder option, add 51 mm on the servomotor length
Motor plugs/connectors are orientable

Standard motor type		
Motor	**Lenze servo motor**	**Lenze 9400 Highline servoamplifier**
LE6	MCS09D41	E94ASHE0034

4

Performance diagrams

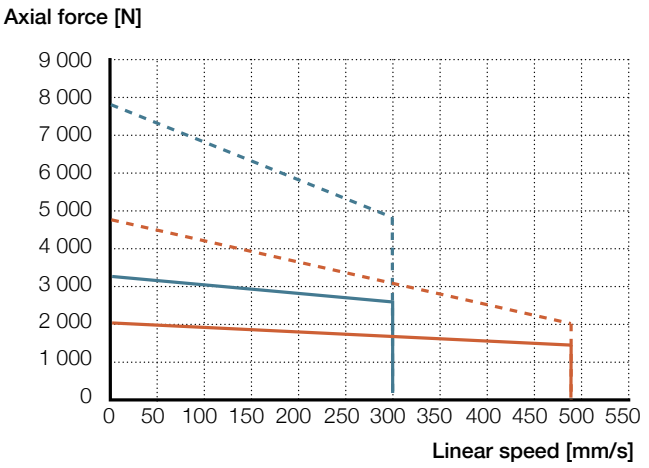

Screw lead 5 mm — Screw lead 8 mm

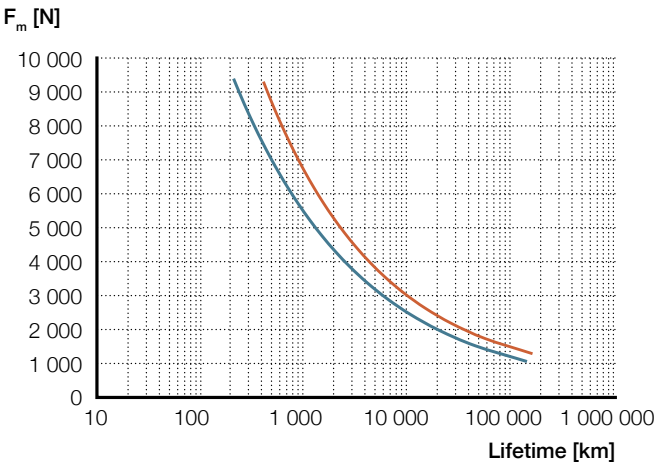

Screw lead 5 mm — Screw lead 8 mm

Ordering key

See **page 290**

SEMC

Servomotor, parallel configuration

Technical data

Designation	Symbol	Unit	SEMC1505 Lenze MCS P10 interface	SEMC1508 Lenze MCS P10 interface
Performance data				
Continuous force @ zero speed	F_{c0}	kN	3,1	1,9
Continuous force @ max speed	F_c	kN	2,4	1,5
Peak force @ zero speed	F_{p0}	kN	7,4	4,5
Peak force @ max speed	F_p	kN	4,6	2,8
Dynamic load capacity	C	kN	26	27,4
Holding force (motorbrake option)	F_{hold}	kN	10	6,7
Max. linear speed	v_{max}	mm/s	300	480
Max. acceleration	a_{max}	m/s²	6	9,5
Duty cycle	D_{unit}	%	100	100
Mechanical Data				
Screw type	–	–	Roller screw	Roller screw
Screw diameter	d_{screw}	mm	15	15
Screw lead	p_{screw}	mm	5	8
Lead accuracy	–	–	G5	G5
Stroke	s	mm	up to 125	up to 125
Internal overstroke each side	s_0	mm	2	2
Backlash	$s_{backlash}$	mm	0	0
Gear reduction	i	–	1	1
Weight @ 0 mm stroke	m_{lu}	kg	8	8
Δ Weight per 50 mm stroke	Δm	kg	0,4	0,4
Environment				
Ambient temperature	$T_{ambient}$	°C	0…+40	0…+40
Degree of protection	IP	–	54S	54S

Dimensional drawing

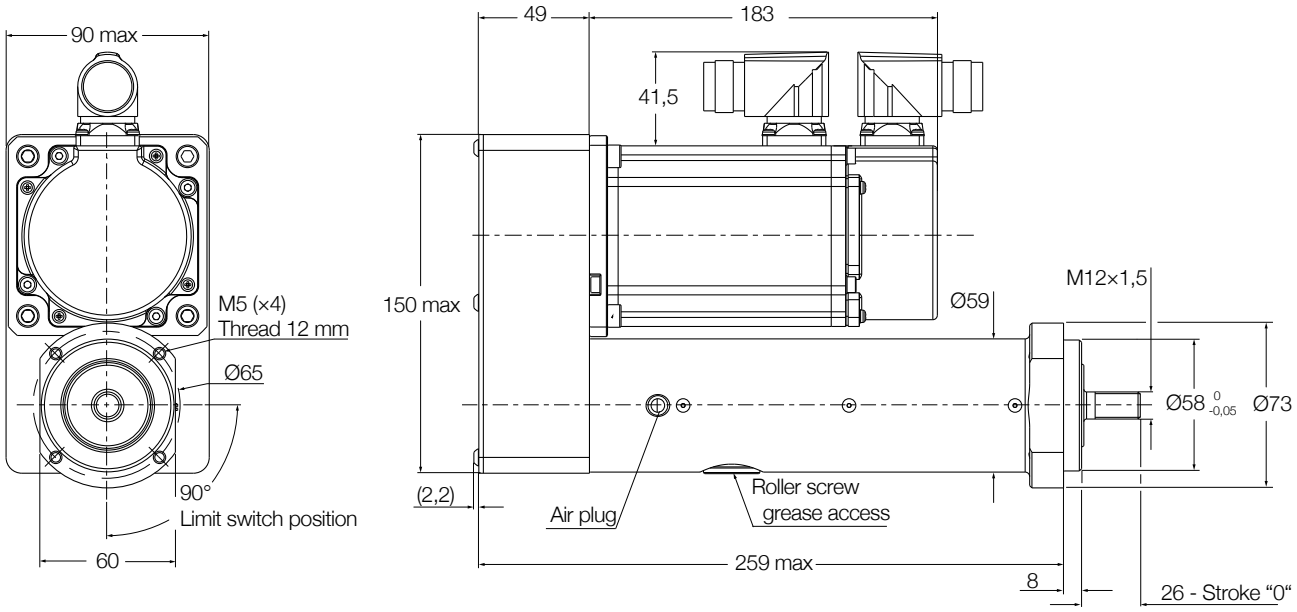

Drawing valid for a stroke of 125 mm (the maximum stroke on SEMC)
For brake option, add 20 mm on the servomotor length
For brake option, add 0,8 kg
For absolute encoder option, add 51 mm on the servomotor length
Motor plugs/connectors are orientable

Standard motor type

Motor	Lenze servo motor	Lenze 9400 Highline servoamplifier
LE6	MCS09D41	E94ASHE0034

Performance diagrams

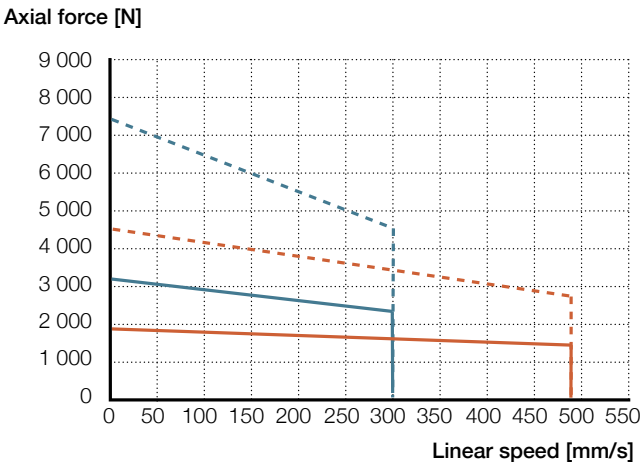

Screw lead 5 mm — Screw lead 8 mm

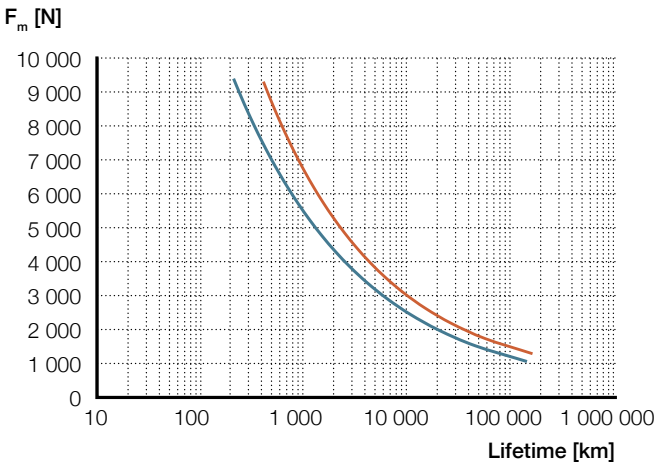

Screw lead 5 mm — Screw lead 8 mm

Ordering key

See **page 290**

Ordering key

Linear units

S E M C - S - 1 5 0 8 - 1 2 5 F M A F - P 1 0 L E 6 1 B Y A 1

Type

Design
U Linear unit only
S Servo motor

Screw diameter

Screw lead
05 5 mm
08 8 mm

Stroke (mm)

Rear attachement
F Front plate
Z Custom

Front attachement
M Male thread
N No attachement (female thread)
Z Custom

Anti-rotation
A Anti-rotation
N No anti-rotation

Limit switches[1)]
F 2 limit switches and 1 home switch
S 2 limit switches only
M 1 limit switch and 1 home switch
L 1 limit switch only
H Home switch only
N No switch

[1)] The limit switches configuration can be limited by the stroke length

SEMC - S - 1508 - 125 FMAF - P10LE61BYA1

Linear unit interface
L Inline interface
P Parallel interface

Interface and gear ratio
10 ratio 1:1

Motor code

Feedback
1 Resolver
2 Absolute encoder Hiperface

EM brake
B Brake 24 VDC
N No brake

Motor drive
Y Drive included
N No drive

Drive fieldbus
A CanOpen
B Devicenet
C Ethercat
D Ethernet
E Powerlink MN/CN
F Powerlink CN
G Profibus
H Profinet
N No fieldbus

Power and signal cables
1 5m
2 10m
3 15m
4 20m
N No cable

5

Glossary and symbols description

Glossary

A		
	Absolute movement	A move referenced from a fixed absolute zero position.
	Acceleration	The change in velocity as a function of time, going from a lower speed to a higher speed.
	Accuracy	An absolute measurement defining the difference between expected and actual position.
	Actuator	An actuator is a device that is responsible for moving or controlling a mechanism or system also known as cylinder, electromechanical cylinder or linear actuator.
	Ambient temperature	The temperature of the cooling medium, usually air, immediately surrounding the actuator or another device.
	Angular contact ball bearing	Angular contact ball bearings have raceways in the inner and outer rings that are displaced relative to each other in the direction of the bearing axis. This means that they are designed to accommodate combined loads, i.e. simultaneously acting radial and axial loads.
	Anodized	Protective treatment for aluminium that involves subjecting the metal to electrolytic action in a chemical bath, to create a protective film of aluminium oxide with a very smooth finish.
	Axial load	Load where the force is acting along the axis of actuator (bearing) in any direction.
B		
	Backlash	The amount of play between a set of moveable parts when changing the direction of travel. Typically seen in drive trains, ball/ lead screws and bearings.
	Ball bearing	A support device which allows a smooth low friction motion between two surfaces loaded against each other with balls as rolling elements.
	Ball screw	A screw assembly which uses a ball nut which contains one or more circuits of recirculating steel balls which roll between the nut and the screw.
	Bearing	A support device which allows a smooth low friction motion between two surfaces loaded against each other.
	Brushless DC motor	Synchronous motor type that are powered by a DC electric supply through an inverter that produce an AC signal to drive the motor.
	Bushing	A cylindrical sleeve inserted into a machine part to reduce friction between moving parts.
C		
	Configurator (product)	Name given to the software that uses the configuration string to build-up a specific actuator from an existing list of components and options.
	Continuous torque	Is the torque that the motor is able to provide continuously with no limitation in time.
	Current	The flow of charge through a conductor.
	Cycle	A complete motion of an actuator from the start position via intermediate positions and back to the start position
	Cycle time	Time for one complete motion cycle, from the start of the cycle until the start of the next cycle
	Cylinder	A mechanical device which produces a linear force to achieve a reciprocating linear motion. There three common types: pneumatic, hydraulic and electromechanical (or electric). The first two use the power of compressed media (gas or liquid) while the latter uses a mechanical device (screw) to transform the rotational input movement of a motor into a linear one.

D		
	Deceleration	The change in velocity as a function of time, going from a higher speed to a lower speed.
	Duty cycle	The ratio of motor on time and total cycle time within a given cycle of operation (considered under normal ambient working conditions).
	Dynamic load rating	Constant that is used to calculate the service life of a screw drive. The value for the dynamic load rating represents the load under which 90% of a sufficient large number of identical screw drives can achieve a service life of one million revolutions.
E		
	Efficiency	Ratio of output power versus input power.
	Electric cylinder	A self-contained system which converts rotary motion (from a motor) to linear motion.
	Electromechanical cylinder	A self-contained system which converts rotary motion (from a motor) to linear motion.
	Electrode	The part of a resistance welding gun that facilitates the high voltage current path to the parts being welded.
	Equivalent dynamic axial load	Load of constant magnitude over a full motion cycle which has the same influence on the linear unit's service life as the actual fluctuating load.
F		
	Foot mount	Mounting plates, attached to front and end of a cylinder, to mount the cylinder in parallel to a flat surface.
	Force	The action of one body on another which tends to change the state of motion of that body. Typically described in terms of magnitude, direction and point of application.
	Friction	The resistance to motion of two surfaces that are in direct contact.
G		
	Gear ratio	This relates to the transmission and conversion of movements, linear and rotary speeds, forces and torques in a geared mechanism. The gear ratio (also known as reduction ratio) is the ratio between the input and output variable, e.g. the ratio of input speed to output speed.
H		
	Hall effect sensor	A magnetically controlled transistor switch controlling DC power. It has no moving parts and theoretically unlimited contact life.
	Holding force	Maximum external force that can be applied to a stopped actuator, without causing any linear movement. It is usually given by the holding torque of an electromechanical brake applied on the motor.
	Humidity (relative)	A ratio that indicates the amount of water vapor in the air. It is usually expressed as a percentage. At any temperature, it is the amount of water vapor in the air, divided by the amount that would be present at saturation.
I		
	Inertia	Property of an object that resists a change in motion. It is dependent on the mass and shape of the object. The greater an object's mass, the greater its inertia and the more force is necessary to accelerate and decelerate it.
K		
	Keyway	An axially-located groove in the length of a shaft along which a key may be located.
L		
	Lead	Describes the axial distance a nut is moving on a screw at one full rotation of either the screw or the nut.
	Lead screw	A screw which uses a threaded screw design (e.g. with trapezoidal shaped thread) with sliding surfaces between the screw and nut.
	Lifetime	Service life in km that 90% of a sufficiently large group of apparently identical cylinders can be expected to reach or exceed.
	Limit switch	A switch that is actuated by some part of motion of a machine or equipment to alter the electrical circuit associated with it.

Linear speed	The linear speed is the change in position as a function of time.
Max. linear speed	Maximum linear speed, a linear unit or a cylinder can reach without damaging the mechanical system. Limiting factors can be the recirculating system of the balls or rollers, or the heat dissipation when using lead screws, or others. If the motor of the cylinder could turn faster, it needs to be limited.
Load	A mass or weight of an application acting on the in axial direction on the push tube.
M	
Mass	The quantity of matter that an object contains.
Moment	Rotational forces applied to a linear axis, typically expressed as yaw, pitch and roll.
Motion profile	A method of describing a move operation in terms of time, position and velocity. Typically, velocity is characterized as a function of time or distance which results in a triangular or trapezoidal profile.
Motor	A device which converts electrical energy into mechanical energy.
O	
O-ring	A ring of synthetic rubber with a circular cross-section, used as a gasket or seal.
Overheating	The heat in a system is mostly dissipated into the surrounding air. Dissipation can be accelerated by various forms of ventilation. In case the dissipation level is lower than the heat generation, overheating takes place.
P	
Peak force	The peak force is the maximum force an actuator can push or pull for a short time (peak), without being mechanically damaged or overheating.
Peak torque	The peak force is the maximum torque a motor can provide for pull for a short time (peak), without being mechanically damaged or overheating.
PLC (programmable logic controller)	An industrial digital computer that is used to control machines and processes by continuously monitoring analog and digital inputs and making decisions based on customer programs.
Positioning accuracy	Is the maximum deviation between the actual position and the target position, as defined in VDI/DGQ 3441 norms.
Power	How much work is done in a specific amount of time.
Proximity sensor	A device for sensing a position of an actuator or application. Proximity sensors supply either a sourcing or sinking signal to a device such as a programmable logic controller.
R	
Radial load	Load where the force is acting perpendicular to the axis of the actuator.
Repeatability	The ability of a positioning system to return to an exact location during operation (from the same direction with the same load and speed).
Resolver	A feedback device consisting of a stator and rotor that provides position and velocity information to the drive for motor commutation.
RMS	The root mean square is the square root of a mean square value.
Rod cylinder	A cylinder using a rod attached to its piston to transmit force.
Roller screw	A screw assembly which uses a roller nut which contains guided steel rollers which are rotating around their own axis and around the screw (planetary rollers).
S	
Screw assembly	Device which converts rotary motion into linear motion.
Service life	The nominal life is expressed by the number of revolutions (or number of operating hours at constant rotary speed) that will be attained or exceeded by 90% of a sufficiently large number of identical screw drives before the firsts signs of material fatigue become evident.
Servomotor	A motor which is used in closed loop systems where feedback is used to control motor velocity, position or torque.
Spur gear	Is a gear or a system of gearing having radial teeth parallel to the axle.
Static axial force	Maximum axial force which can be applied on a linear unit only if it is not moving.
Stiffness	Is the rigidity of an object, representing its resistance to deformation from an applied force.
Stroke length	The linear distance that the push tube of a cylinder can extend or retract.

T		
	Thermal load	The thermal load describes the force which the actuator can permanently move without overheating. The thermal load is calculated by a formula in respect of changing load conditions over different time phases of a full motion cycle.
	Torque	A measure of angular force which produces rotational motion.
U		
	Units (metric)	A decimal system of weights and measures based on the kilogram and meter.
V		
	Volt	Difference in electrical potential between two points.
W		
	Watt	A unit of power or a rate of doing work. The power dissipated by a one-ohm resistor with one ampere of current is one watt.
	Weight	Force of gravity acting on a body. Determined by multiplying the mass of the object by the acceleration due to gravity.

Symbols description

A			
a	m/s²	**Acceleration**	The change in velocity as a function of time, going from a lower speed to a higher speed.
a_{max}	m/s²	**Max. acceleration**	The maximum allowed change in velocity as a function of time from a lower speed to a higher speed. Exceeding this value can cause damages.
C			
C	kN	**Dynamic load capacity**	Constant that is used to calculate the service life of a ball or roller screw. The value for the dynamic load rating represents the load under which 90% of a sufficient large number of identical screws can achieve a service life of one million revolutions.
D			
D	%	**Duty cycle of the cylinder**	The ratio of active time at full load and total cycle time within a given cycle of operation.
D_{unit}	%	**Duty cycle of the linear unit**	The ratio of active time and total cycle time within a given cycle of operation.
d_{screw}	mm	**Screw diameter**	Describes the outer diameter of the screw shaft.
E			
η	%	**Efficiency**	Ratio of output power versus input power.
η_{lu}	%	**Efficiency of the linear unit**	Ratio of output power versus input power of the linear unit.
F			
F	N	**Force (cylinder) or load (application)**	The action of one body on another which tends to change the state of motion of that body. Typically described in terms of magnitude, direction and point of application. The force is related to the capability of the cylinder while the load is related to the mass or weight of an application acting on the axial direction on the push tube.
F_{Amax}	N	**Maximum dynamic axial load of the application**	Maximum axial push or pull load which is needed to fulfill the specifications of the application.
F_c	N	**Continuous force at max speed**	The continuous force at max speed describes the force the cylinder can permanently move at maximum allowed linear speed, without overheating.
F_{c0}	N	**Continuous force at zero speed**	The continuous force at zero speed describes the force the cylinder can permanently hold without overheating and without using a brake.
F_{cont}		**Continuous force curve**	A curve that represents the continuous force an actuator can permanently move at maximum allowed linear speed, without overheating.
F_{Hold}	kN	**Holding force of the brake**	Describes the maximum axial load the engaged brake (optional motor brake) can hold if the motor is disabled. This value must not exceed the maximum axial force of the cylinder.
F_m	N	**Equivalent dynamic axial load**	Load of constant magnitude over a full motion cycle which has the same influence on the linear unit's service life as the actual fluctuating load.
F_{max}	N	**Maximum dynamic axial force**	The maximum dynamic axial force describes the maximum force an electric cylinder can deliver during movements without damaging parts. The acceleration/ deceleration of masses need to be considered.
F_{maxL10}	N	**Maximum dynamic axial force**	Maximum dynamic axial force usable to apply the theoretical lifetime calculation (L10).
F_{max0}	N	**Max. static axial force**	Maximum axial force which can be applied on a linear unit only if it is not moving.

F_p	N	**Peak force**	The peak force describes the maximum force the cylinder can push or pull for a short time, without being mechanically destroyed or by overheating. The length of the peak is depending on the temperature of the system when the peak is initiated.
F_{p0}	N	**Peak force at zero speed**	The peak force at zero speed is the maximum force the cylinder can hold for a short time without using a brake.
F_{peak}		**Peak force curve**	A curve that represents the continuous force an actuator can push or pull for a short time, without being mechanically destroyed or by overheating. The length of the peak is depending on the temperature of the system when the peak is initiated.
I			
i	#	**Gear reduction**	Describes the factor between the number of revolutions of the input of the gear divided by the number of revolutions of the output of the gear. A gear reduction 2 means that the output of the gear (linear unit side) is turning with half speed compared to the input of the gear (motor side). Using a gear reduction enables for using smaller motors with less torque to bring higher force but with lower speed.
I	A	**Nominal Current**	Is the nominal current consumption of the motor.
I_{peak}	A	**Peak current**	Is the maximum current consumption of the motor for a short period of time.
IP		**Degree of protection**	International protection (also ingress protection) describes the protection of a product with two digits. The first digit describes the protection against dust, the second against water. The higher the value the better the protection.
J			
J	10^{-4} kgm^2	**Inertia**	Property of an object that resists a change in motion. It is dependent on the mass and shape of the object. The greater an object's mass, the greater its inertia and the more force is necessary to accelerate and decelerate. As an electric cylinder is available in different lengths, the inertia is typically given for stroke 0, followed by an inertia indication ΔJ for each additional 100 mm.
J_{brake}	10^{-4} kgm^2	**Inertia of the brake**	Property of an object that resists a change in motion. It is dependent on the mass and shape of the object. The greater an object's mass, the greater its inertia and the more force is necessary to accelerate and decelerate. As the brake is typically an option, this value has to be added to the Inertia of the electric cylinder.
J_{lu}	10^{-4} kgm^2	**Inertia of the linear unit**	Property of an object that resists a change in motion. It is dependent on the mass and shape of the object. The greater an object's mass, the greater its inertia and the more force is necessary to accelerate and decelerate. As the linear unit is available in different lengths, the inertia is typically given for stroke 0, followed by an inertia indication ΔJ for each additional 100 mm.
L			
$L_{10\ dist}$	km	**Lifetime distance**	Service life in km that 90% of a sufficiently large group of apparently identical cylinders can be expected to reach or exceed.
M			
m	kg	**Weight**	Force of gravity acting on a body. Determined by multiplying the mass of the object by the acceleration due to gravity.
Δm	kg	**Weight difference**	As electric cylinders are available in different lengths, the weight is typically given for stroke 0, followed by a weight indication Δm for each additional 100 mm.
m_{arot0}	kg	**Weight of the anti-rotation device**	The weight of the optional anti-rotation device has to be added to the weight of the cylinder.
m_{brake}	kg	**Weight of the brake**	The weight of the optional brake has to be added to the weight of the cylinder.
m_{lu}	kg	**Weight of the linear unit**	As the linear unit is available in different lengths, the weight is typically given for stroke 0, followed by a weight indication Δm for each additional 100 mm.
M	Nm	**Torque**	A measure of angular force applied to a linear axis to produce rotational motion.
M_{Ac}	Nm	**Required continuous torque**	A measure of continuous angular force (torque) a motor has to deliver without overheating.
M_{Amax}	Nm	**Required maximum torque of the motor**	Maximum angular force (torque) of a motor which is required that the cylinder is able to push or pull the maximum load of the application.
M_{max}	Nm	**Maximum torque**	The maximum torque is the upper limitation of the torque. Exceeding this value can cause damages of related parts.

N				
	n_{cycles}	#	**Number of cycles**	The number of motion cycles a cylinder has to have without damage during the expected life of the application.
	n_{max}	1/min	**Max. rotational speed**	Describes the maximum allowed number of full rotations of an axis. Exceeding this value can cause damages.
P				
	P	W	**Nominal Power**	Nominal power of the motor, given by multiplying the nominal voltage and the nominal current.
	p_{screw}	mm	**Screw lead**	Describes the axial distance a nut is moving on a screw at one full rotation of either the screw or the nut.
R				
	R	Ω	**Resistance**	The opposition to the flow of charge through a conductor.
S				
	s	mm	**Stroke**	The linear distance that the push tube of a cylinder can extend or retract.
	s_0	mm	**Internal over stroke**	Additional stroke which is not part of the specified stroke length of the cylinder. It is used to prevent the screw nut touching the mechanical end stops when moving over the full specified stroke.
	$s_{backlash}$	mm	**Backlash**	Axial play that the cylinder push tube has without turning the screw. It's equivalent with the mechanical axial play of the inner parts of the cylinder.
	s_{cycle}	m	**Distance travelled per motion cycle**	Travelled distance of a push tube for a full motion cycle, from the start to the next start in both directions.
	s_{max}	mm	**Maximum stroke**	The maximum stroke describes the mechanical limitation which a cylinder can extend or retract. Limiting factors are side loads (buckling), speed (wobbling of the screw inside), limitations in the manufacturing process and others.
T				
	t	s	**Time**	Time in seconds which is needed for a certain activity.
	t_{cycle}	s	**Cycle time**	Time for one complete motion cycle, from the start of the cycle until the start of the next cycle.
	t_L	h	**Required lifetime in hours**	The lifetime of a cylinder in hours which is required to serve an application without damage during the expected life of the application.
	T	Nm	**Torque**	A measure of angular force applied to a linear axis to produce rotational motion.
	$T_{ambient}$	°C	**Ambient temperature**	Temperature of the environment around the object.
U				
	U	V	**Nominal voltage**	Is the supply voltage required by the electric motor.
V				
	v	mm/s	**Linear speed**	The linear speed is the change in position as a function of time.
	v_{max}	mm/s	**Max. linear speed**	Maximum linear speed, a linear unit or a cylinder can reach without damaging the mechanical system. Limiting factors can be the recirculating system of the balls or rollers, or the heat dissipation when using lead screws, or others. If the motor of the cylinder could turn faster, it needs to be limited.
	v_{min}	mm/s	**Min. linear speed**	Minimum linear speed of a LEMC-A cylinder equipped with asynchronous motors that can be adjusted through the integrated frequency inverter.

ewellix.com

© Ewellix
All contents of this publication are the property of Ewellix, and may not be reproduced or given to third parties (even extracts) without permission. Although great care has been taken in the production of this catalog, Ewellix does not take any responsibility for damage or other loss resulting from omissions or typographical errors. The photo may differ slightly in appearance from the actual product. Due to continuous improvements being made in our products, the product's appearance and specifications are subject to change without notice.

PUB IL-05001/1-EN-May 2020

Certain image(s) used under license from Shutterstock.com.
SKF and SKF logo are trademarks of the SKF Group